ST. LOUIS COUNTY SANITARY LANDFILL SW-405
APPLICATION FOR PERMIT RENEWAL

JULY 2013 PERMIT APPLICATION

Prepared for:

ST. LOUIS COUNTY, MINNESOTA

July 2013

Prepared by:

Liesch Companies

MINNEAPOLIS ▪ MILWAUKEE ▪ PHOENIX ▪ LOS ANGELES ▪ ST. PAUL

Saint Louis County

Environmental Services Department • 307 First Street South, Suite 115 • Virginia, MN 55792
Phone:(218)749-9703 or 1-800-450-9278 • Fax: (218)749-0650 Email: stlawrencem@stlouiscountymn.gov

Mark St. Lawrence
Program Administrator

July 3, 2013

Ms. Beckie Olson
Minnesota Pollution Control Agency
520 Lafayette Road North
St. Paul, MN 55155-4194

Re: Application for Permit Renewal for St. Louis County Regional Landfill SW - 405

Ms. Olson:

Enclosed please find the Application for Permit Renewal (Application) for the above referenced facility. The Application consists of seven (7) written reports including:

Docment I	Introduction
Document II	Design Report
Document III	Operations and Maintenance Plan
Document IV	Industrial Solid Waste Management Plan (Dated April 2011)
Document V	Household Hazardous Waste Management Plan (August 2010)
Document VI	Leachate Management Plan
Document VII	Closure, Post-Closure, Contingency Action Plan and Financial Assurance

In addition, the Application includes a 18-page set of Engineering Drawings.

The Application builds off the previous application submitted in October 2007.

Please contact Dave Fink at (218) 742-9537 or finkd2@stlouiscountymn.gov or me at (218) 749-0647 or stlawrencem@stlouiscountymn.gov with any comments or questions you may have.

Sincerely,

Mark St. Lawrence
Program Administrator

Cc: Trevor Shearen, Prevention & Solid Waste Management
Alex Hokenson, Prevention & Solid Waste Management

July 2013 Permit Application
Table of Contents

TAB A **INTRODUCTION**
- **Permit Application Form and Checklists**

TAB B **DESIGN REPORT**
- **Appendix A – HELP Model Results and Discussion**
- **Appendix B – Pipe Strength Calculations**
- **Appendix C – Technical Specifications**
- **Appendix D – Quality Assurance Manual**
- **Appendix E – Reduced Copy of Permit Drawings**

TAB C **OPERATIONS AND MAINTENANCE PLAN**

TAB D **INDUSTRIAL SOLID WASTE MANAGEMENT PLAN**

TAB E **HOUSEHOLD HAZARDOUS WASTE MANAGEMENT PLAN**

TAB F **LEACHATE MANAGEMENT PLAN**
- **Secondary Spray Application Site Investigation Work Plan**

TAB G **CLOSURE, POST-CLOSURE, CONTINGENCY ACTION PLAN, AND FINANCIAL ASSURANCE PLAN**

TAB A

Introduction
Permit Re-Application
MPCA Permit Number SW-405
St. Louis County Regional Landfill
Virginia, Minnesota

Prepared by:

ST. LOUIS COUNTY ENVIRONMENTAL SERVICES DEPARTMENT
Northland Office Center, Suite 115
307 1st Street South
Virginia, Minnesota 55792

NORTHEAST TECHNICAL SERVICES, INC.
526 Chestnut Street
P.O. Box 1142
Virginia, Minnesota 55792

and

LIESCH ASSOCIATES, INC.
350 St. Peter Street
St. Paul, Minnesota 55102

July 2013

CON cu. yds.
Year south spray field removed

Introduction

A. GENERAL

This document is a Permit Re-issuance application for the St. Louis County Regional Mixed Municipal Solid Waste (MSW) Disposal Facility located in Virginia, Minnesota. This facility, in operation since November 15, 1993, has disposed of approximately 1,758,881 cubic yards of waste and daily/intermediate/final cover through December 31, 2012. The current permitted capacity issued for the facility is 2,321,820 cubic yards.

Under the original permit, issued April 30, 1993, the site was designed for six phases of construction and a 30-year ultimate waste capacity of 1,650,000 cubic yards assuming an average of 55,000 cubic yards per year fill rate. The current fill rate averages approximately 92,000 cubic yards per year with a breakdown of 77,000 cubic yards of waste (MSW, industrial, demolition, and asbestos) and 15,000 cubic yards of cover. Under the permit issued July 20, 1999, the redesign of the site reduced the footprint of the facility from 42 acres to 29 acres, but increased the facility's overall design capacity from 1,650,000 cubic yards to 1,990,000 cubic yards, including final cover. This was accomplished by increasing the final cover slopes from 4.5 to 10 percent, reducing berm heights, and excavating deeper base grades while maintaining a minimum 10-foot separation from groundwater and original ground surface. The permit also increased the number of phases of construction from six to seven and included the Certificate of Need (CON), granting the Regional Landfill disposal capacity for 429,625 cubic yards of unprocessed MSW (not including cover soils).

In April 2003, the County submitted its Comprehensive Solid Waste Management Plan Update (Plan) to the Minnesota Office of Environmental Assistance. The Minnesota Office of Environmental Assistance approved the Plan and issued a ten-year CON for disposal capacity of 774,560 cubic yards of MSW for the years 2003 through 2013.

The County's permit was approved November 17, 2003, received approval for design changes and increased volume for the landfill. The landfill's final phases were redesigned to allow for more efficient use and operation of the site. The redesign resulted in increased site life without changing the original footprint approved in the 1993 permit. The redesign included:

- Reducing the number of new cells constructed in the previous permit's foot print from three to two.
- Increasing berm size.
- Increasing final cover slopes from approximately 10 to 20 percent on current and future open cells.
- Increasing final elevations.
- Expanding north of the previous permit=s foot print to include land that was originally permitted in 1993.

- Increasing the ultimate capacity from 1,990,000 cubic yards to 4,208,670 cubic yards and extending the life of the landfill from 2011 to 2039 (based on 1993 through 2012 average annual fill rates).

In March 2012, the County submitted its Comprehensive Solid Waste Management Plan Update (Plan) to the Minnesota Pollution Control Agency (MPCA). Approval of the ten-year Plan and associated 757,900 cubic yards of CON are pending completion of the MPCA review process.

Since 1994, leachate has been treated by an on-site spray irrigation system which included the 22.5-acre North (Primary) spray irrigation field. In 1999, the South (temporary) spray irrigation field was constructed to provide additional, but temporary, leachate spray irrigation capacity within the permitted footprint of the Landfill. In 2008, the six (6) sprinkler nozzles and irrigation lines within the South spray irrigation field were removed to allow for the development of future landfill cells.

In 2009, the County upgraded its leachate spray irrigation system. The major components of the upgrade included the installation of a larger vertical turbine pump, seven (7) electronically actuated valves, and an electromagnetic flow meter. Additionally, upgrades to the North spray irrigation field included installation of 6-inch pipe throughout the 22-acre land application field and five (5) additional fixed head rotary gun-type sprinkler nozzles, increasing the total number of sprinkler nozzles to 21. These upgrades maximized spray coverage throughout the field and significantly reduced the amount of maintenance required to keep the system operating efficiently.

The County is currently evaluating development of an alternative (Secondary) spray irrigation field on adjacent property. The Secondary spray irrigation field is proposed immediately north of the existing Primary spray irrigation field on 160 acres currently owned by the Quad Cities Biosolids Disposal Site Authority (Authority). The Authority administers land application of waste water treatment biosolids from the cities of Virginia, Eveleth, Gilbert and Mountain Iron. Each City maintains individual land application permits, originally obtained in 1998 from the MPCA. Please refer to the Leachate Management Plan for additional information.

The repermitting application package prepared for the facility includes the following stand-alone documents:

1. Introduction
2. Design Report
3. Operations and Maintenance Plan
4. Leachate Management Plan
5. Closure, Post-Closure, Contingency Action Plan, and Financial Assurance

B. FACILITY INFORMATION

Name of Facility:	St. Louis County Regional Landfill
Location:	637-acre parcel of land; Landfill on Sections 10 and 11, T58N, R17W, Virginia, Minnesota
Permittee/Operator:	St. Louis County 307 1st Street South, Suite 115 Virginia, MN 55792-2696 Attention: Mr. Ted Troolin, Director Environmental Services Department
Expected Waste Types:	Mixed municipal, industrial solid waste, and small amounts of demolition
Estimated Waste Quantities:	Approximately 92,500 cubic yards per year of waste and daily/intermediate cover
Current Permitted Site Capacity:	2,321,820 cubic yards (includes daily, intermediate, and final cover)
Volume Utilized: **(as of December 31, 2012)**	1,758,881 cubic yards (includes daily, intermediate, and final cover)
Total Ultimate Capacity:	4,208,670 cubic yards (includes daily, intermediate and final cover)
Permitted Final Elevation:	1,840 feet
Expected Site Life:	Approximately 27 years after December 31, 2012, based on current fill rates.
Current Zoning:	MO - Mining and Open Space
Submittal Prepared By:	St. Louis County Environmental Services Dept. 307 1st Street South, Suite 115 Virginia, MN 55792
Project Manager:	Mark St. Lawrence, Program Administrator St. Louis County Environmental Services Dept.
Project Engineer:	Eric Hesse, P.E.- Liesch Associates, Inc. 350 St. Peter Street

St. Paul, Minnesota 55102

Project Hydrogeologist:

Northeast Technical Services, Inc.
P.O. Box 1142
Virginia, Minnesota 55792

Minnesota Pollution Control Agency
520 Lafayette Road
St. Paul, MN 55155-4194

Permit Application for Construction and Operation

Solid Waste Permit Program

Doc Type: Permit Application

MPCA Public Notice Number: _____

Print or type application: Before submitting, make a photocopy for your records. The Minnesota Pollution Control Agency (MPCA) will review the application for completeness and provide an official response to the permittees within 30 business days of receipt of the application.

Permit Application Assembly: To expedite the processing and review of your application, **put this form at the beginning** of your submittal package. Please place all checklists directly behind this application form in order by the number found on the bottom left hand corner of each checklist. **Do not place forms and checklist in an appendix** as this makes it difficult and time consuming for staff to locate them.

Completeness instructions: Without properly completed forms, an application cannot be processed and will be determined to be incomplete. All sections of this form must be completed. If portions do not apply to this facility, please indicate so with "n/a".

The completed form is to be returned to: **Solid Waste Permit Document Coordinator**
Minnesota Pollution Control Agency
520 Lafayette Road North
St. Paul, MN 55155-4194

Facility name: St. Louis County Regional Landfill Permit No.: SW-405

Application is for (check appropriately): ☐ New permit ☒ Permit reissuance
☐ Major modification ☐ Minor modification
☐ Resubmittal of 'incomplete' application originally submitted on: _____ *(mm/dd/yyyy)*

Variance request(s) included (check appropriately): ☐ Yes ☒ No
If yes, please describe:

_____

_____

Checklists Required (Please check all that are included with this application.)

All applicable checklists must be completed and submitted with this application. The MPCA will not process an application that does not include all of the required checklists. All checklists can be found at: http://www.pca.state.mn.us/enzq8a9.

All Solid Waste Facilities
☐ Solid Waste Facility Application Checklist

Mixed Municipal Solid Waste (MSW) Landfill
☒ MSW Landfill Application Checklist

MSW Combustor Ash Landfill
☐ MSW Combustor Ash Landfill Application Checklist

Demolition Debris Landfill
☐ Demolition Debris Landfill Application Checklist

Industrial Solid Waste Landfill
☐ Industrial Solid Waste Landfill Application Checklist

Transfer Station
☐ Solid Waste Transfer Station Application Checklist

Solid Waste Compost Facility
☐ Solid Waste Compost Facility Application Checklist

Refuse-Derived Fuel Processing Facility
☐ Refuse-Derived Fuel Processing Facilities Application Checklist

I. Local Acknowledgment/Permission for

Other Solid Waste Facilities

This section is primarily meant to notify the county and local authorities of the applicant's intent so that all county and local ordinances and plans can be met. It is intended to validate that counties and local authorities were properly notified of this permit application for construction and operation. Signature by the county or local authority is not meant to imply approval.

A. County Acknowledgment/Permission (to be completed by County Solid Waste Administrator or County Zoning Administrator)

Signature: [signature] Date: 6/27/13

Print name: Ted Troolin Phone: 218-749-0639

Title: Director, Environmental Services Department Fax: 218-749-0650

E-mail: troolint@stlouiscountymn.gov

Organization: St. Louis County

Address: 307 1st Street South

City: Virginia State: MN Zip: 55792

B. Local Acknowledgment/Permission (to be completed by local building or zoning office)

Signature: [signature] Date: 6/27/13

Print name: Bill Hennis Phone: 218-748-7500

Title: Engineer, City of Virginia Fax: n/a

E-mail: n/a

Organization: City of Virginia

Address: 327 1st Street South

City: Virginia State: MN Zip: 55792

In lieu of completion of this part of the application, the applicant may submit documentation that the applicant has sent appropriate notification to the county and local authorities. Documentation must consist of copies of letters sent to the county and local authorities via certified mail, return receipt requested and copies of the signed return receipt.

Solid Waste Transfer Facilities

If this application is for a transfer facility, the applicant must attach copies of all required municipal licenses/approvals. The MPCA will not process an application without these approvals. See Minn. R. 7001.3075, subp. C, for more details. If no municipal approvals are required the owner or operator must sign the statement below stating that no municipal approvals are required.

Have all local licenses/approvals been acquired? ☐ Yes ☐ No

If yes, please list all approvals, include issuances and expiration dates (please include copies of the approvals in the permit application:

n/a

If no, please sign the following line confirming no municipal approvals are required:

Signature: _____ Date: _____

Print name: _____ Title: _____

II. Facility Information

A. General Information

Facility name: St. Louis County Regional Landfill Permit number (for modification/ reissuances only) SW-405

Address: 5341 Regional Landfill Road

City: Virginia State: MN Zip: 55792

MPCA Region (check one): ☐ Brainerd ☐ Detroit Lakes ☒ Duluth ☐ Marshall/Willmar ☐ Metro ☐ Rochester

B. Legal description of property (acreage includes the entire area of the facility)

637 Acres ____ ¼ ____ ¼ ____ ¼ ____ ¼ Section 10&11 T 58 N R 17 W

Township name: City of Virginia MN Legislative District: 5A

County: ____

Latitude: 47 Deg 31 Min 35 Sec North

Longitude: 92 Deg 28 Min 59 Sec West

1. Directions to the facility (physical location): From Virginia, take HWY 53 South to Hwy 135 East. Turn left on County Road 921. Turn left onto Regional Landfill Road. Continue for 2.3 miles to site.
2. Current land use: Active MSW landfill, special waste collection, recyclables processing, Household Hazardous Waste collection and open space.
3. Current zoning designation of the site and the surrounding areas within a quarter mile radius: M/O - Mining and Open Space
4. Describe the key topographic features at and around the facility: Mine overburden on natural soils and bedrock. The site is located east of the Laurentian Divide in the Pike River drainage flowing north to Hudson Bay.
5. Environmental Assessment Worksheet (EAW) or Environmental Impact Statement (EIS) required? ☐ Yes ☒ No
   Explain: No increase in currently permitted ultimate capacity

C. Identify the following features within a one mile radius of the site

Feature		Distance
Current and former water supply or monitoring wells		
Airports	n/a	
Lakes or ponds		Approx. 800 ft.
Rivers, streams or springs		Approx. 1 mile
Wetlands	n/a	
Floodplains	n/a	
Karst features (sinkholes, caves)	n/a	
Parks or wildlife refuges	n/a	
Present or proposed access and major haul roads, and their weight restrictions		
Easements or right-of-way		1/2 mile
Recreational areas		1 mile
Historical or archeological areas	n/a	

III. Waste Activity Information

A. Type(s) of Waste Activity(s) to occur at the facility (check all boxes that apply)

Disposal activity

- ☒ Mixed Municipal Solid Waste
- ☒ Industrial Solid Waste
- ☒ Demolition Debris
- ☐ Municipal Solid Waste Combustor Ash
- ☒ Other: Yard Waste Composting

Processing activity

- ☐ Solid Waste Composting
- ☐ Solid Waste Transfer Station
- ☒ Solid Waste Recycling
- ☐ Solid Waste Processing (prior to mass burn)
- ☐ Solid Waste Storage
- ☐ Refuse-Derived-Fuel (RDF)
- ☒ Other: Special waste processing as listed in section IV

B. Describe the capacity of each waste activity area and the total facility capacity in the tables below. Provide information for each type of activity selected above.

Disposal activity areas

	Capacity (yd^3)				
Disposal area	**Ultimate design capacity**	**Proposed additional capacity**	**Current in-place volume**	**Remaining permitted capacity**	**Certificate of Need (MSW only)**
Mixed Municipal Solid Waste (MSW)	4,208,670 yd3	n/a	1,758,881 yd3 as of 12/31/13	562,939 yd3	757,900 yd3 for 2013 - 2023
Industrial Waste		n/a			
Demolition Debris		n/a			
Municipal Solid Waste Combustor Ash		n/a			
Other:					
Total	4,208,670 yd3		1,758,881 yd3	562,939 yd3	757,900 yd3

Processing activity areas

Processing area	**Proposed capacity**		**Permitted capacity**		**Design capacity**	
	tons/year	**tons/day**	**tons/year**	**tons/day**	**tons/year**	**tons/day**
Solid Waste Composting	n/a					
Solid Waste Transfer Station	n/a					
Solid Waste Recycling	n/a					
Solid Waste Processing (prior to mass burn)	n/a					
Solid Waste Storage	n/a					
Refuse-Derived-Fuel (RDF)	n/a					
Other:						
Total						

IV. Operational Information

A. List the solid waste and waste by-products to be managed at the facility according to the waste type, quantity, and management method (collect, transfer, store, process, convert, compost, treat, or disposal).

Waste Type			**Management Method**
Municipal Solid Waste			Landfill
MSW Combustor Ash			n/a
Demolition Debris	250 10		Collect, transfer to permitted demo landfill Landfill
Industrial Waste			Landfill
Asbestos			Landfill
Appliances			Stored and recycled
Electronics			
Yard Waste			Compost
Tires			Collect, transfer
Household Hazardous Waste			Collect, transfer

Recyclables (list)	25	Tons/week	Collect, transfer to St. Louis County Recyling Facility
Other: Scrap Metal	8	Tons/week	Collect,transfer
Other: Lead Acid Batteries	8	Units/week Gallons/week	Collect, transfer
Other: Used Motor oil	165		Collect, transfer

B. The facility will have capacity to receive 125+ vehicles per day and expects to receive an average of 95-100 vehicles per day. List the vehicle types (i.e., packer trucks, roll-off boxes, private citizen vehicles) using the facility including those that transport special wastes, such as tires or white goods.

Vehicle Type		Waste Type Transported
Packer Trucks		MSW
Transfer Trailers		MSW
Roll-off Trucks		MSW, Industrial, Demolition
Private and commercial haulers, trucks and automobiles	65-70 per day	MSW, Industrial, Demolition, Special Wastes, Recyclables, HHW Asbestos, Yard Waste

C. Describe the equipment to be located and used on site at the facility, or the availability and arrangement for use of equipment kept off-site, managing the waste:

The following vehicles are located on-site: 3-landfill compactors, 1- D-5 Dozer, 1-D6H Dozer, 1 - 5yd front end loader, 1 - 3yd front end loader 2 - articulating dump trucks, 1 - tandem dump truck, 3 - hydraulic excavators, 1 - utility pickup truck

V. Signature and Certification

I certify under penalty of law that this document and all attachments were prepared under my direction or supervision in accordance with a system designed to assure that qualified personnel properly gather and evaluate the information submitted. Based on my inquiry of the person or persons who manage the system, or those persons directly responsible for gathering the information, the information submitted is, to the best of my knowledge and belief, true, accurate, and complete. I am aware that there are significant penalties for submitting false information, including the possibility of fine and imprisonment.

Engineer (Consultant)

Signature: Eric Hesse Date: 7/1/13

Print name: Eric Hesse License Number: 22743

Title: Professional Engineer / Senior Project Manager State licensed: MN

E-mail: eric.hesse@liesch.com

Organization: Liesch Associates Inc.

Address: 350 St. Peter Street

City: St. Paul State: MN Zip: 55102

Phone: 651-600-3502 Fax:

I certify under penalty of law that this document and all attachments were prepared under my direction or supervision to assure that qualified personnel properly gathered and evaluated the information submitted. Based on my inquiry of the person or persons directly responsible for gathering the information, the information submitted is, to the best of my knowledge and belief, true,

accurate, and complete.

I further certify that the construction and operation of the above described facility will be in accordance with the plans, specifications, reports and related communications accepted by the Minnesota Pollution Control Agency (MPCA) and on file in its office; and in accordance with conditions imposed in the permit issued by the MPCA.

I certify that the facility is consistent with local solid waste management plans. I am aware an MPCA permit must be obtained before construction or operation of the facility may begin and all local permits, licenses or other government approval must be obtained before an MPCA permit can be issued.

I am aware that there are significant penalties for submitting false information, including the possibility of fines and imprisonment.

Landowner

Signature: Ted Troolin Date: 6/27/13

Print name: Ted Troolin Phone: 218-749-0639

Title: Director, Environmental services Department Fax: 218-749-0650

Email: troolint@stlouiscountymn.gov

Organization: St. Louis County

Address: 307 1st Street South

City: Virginia State: MN Zip: 55792

Phone: 218-749-9703 Fax: 218-749-0650

Owner (Applicant)

Signature: Ted Troolin Date: 6/27/13

Print name: Ted Troolin Phone: 218-749-0639

Title: Director, Environmental Services Department Fax: 218-749-0650

E-mail: troolint@stlouiscountymn.gov

Organization: St. Louis County

Address: 307 1st Street South

City: Virginia State: MN Zip: 55792

Operator*

Signature: Date: 6/27/13

Print name: Bob Kangas Certification No: 52086645

Title: President Expiration Date: 7/1/2015

E-mail: Phone: 218-741-4733

Organization: Kangas Excavating Inc. Fax:

Address: 3675 Loon Lake Road

City: Aurora State: MN Zip: 55705

**Provide the same information for other certified operators.*

VI. Solid Waste Annual Report Contact

Print name: Mary McReynolds Phone: 218-749-0648

Title: Planner II Fax: 218-749-0650

E-mail: mcreynoldsm@stlouiscountymn.gov

Organization: St. Louis County

Address: 307 1st Street South

City: Virginia State: MN Zip: 55792

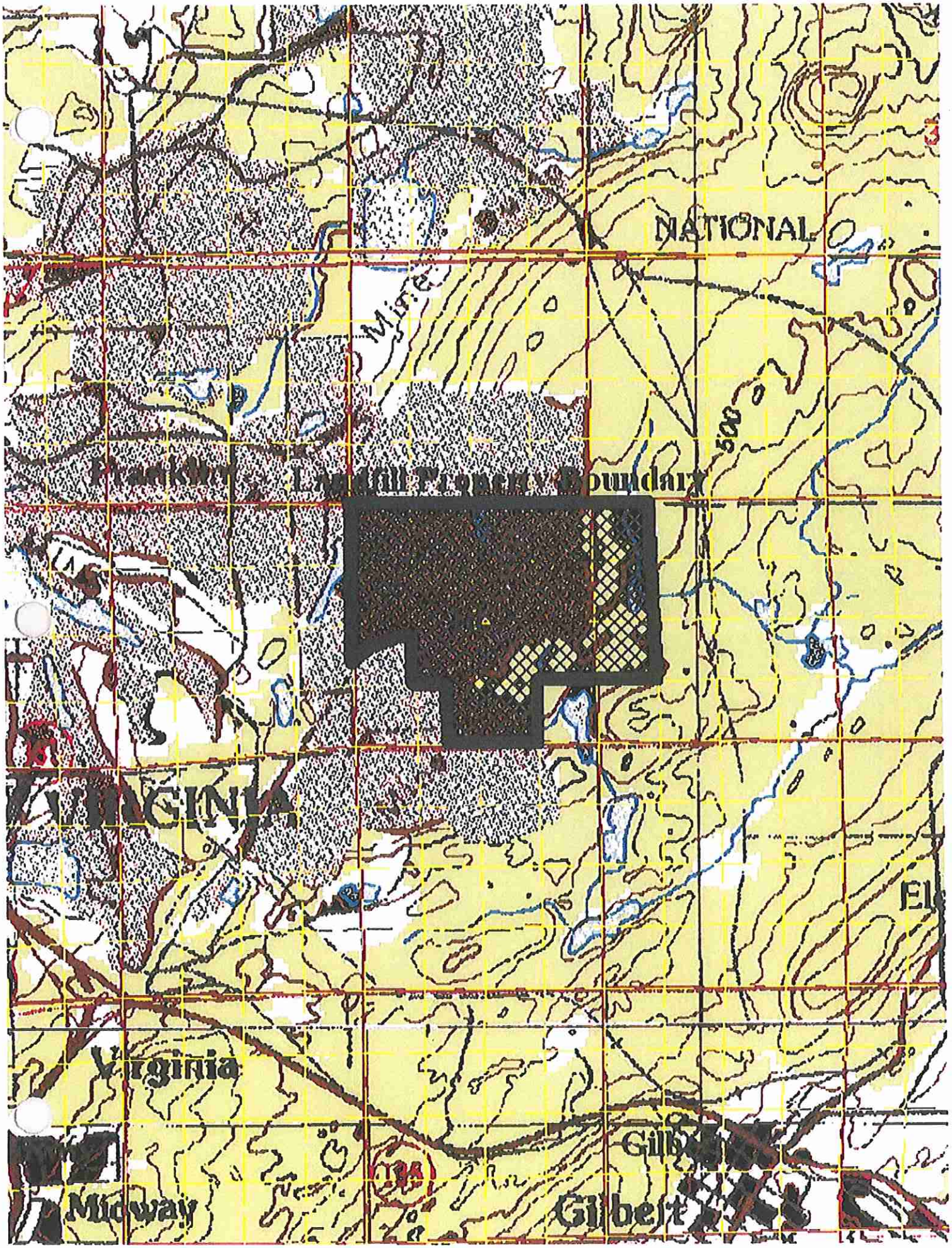
NATIONAL
Mine
500
Landfill Property Boundary
Virginia
Midway
Gilbert

CITY OF GILBERT, VIRGINIA, EVELETH (N)

T.58N-R.17W

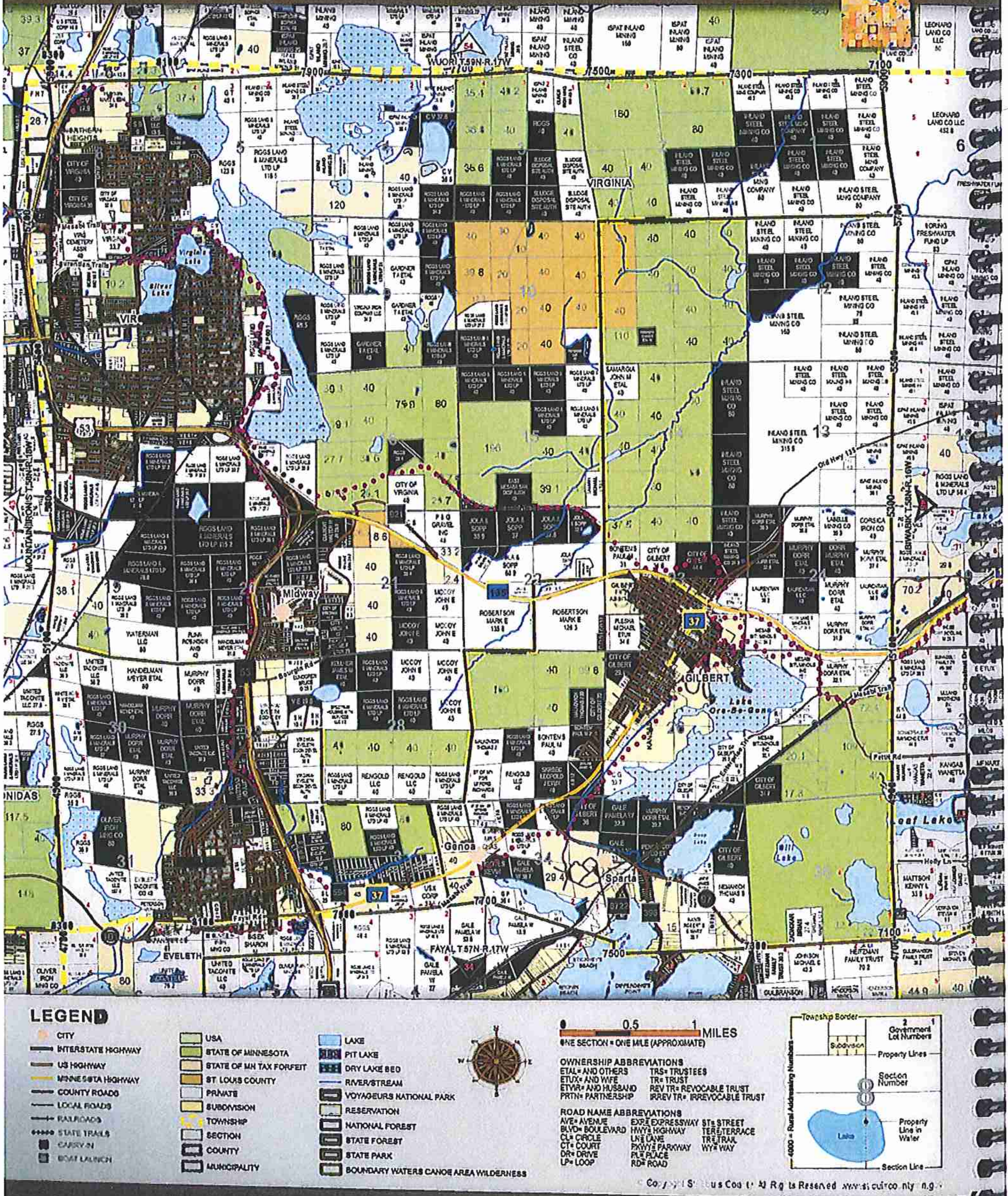

© Copyright St. Louis County. All Rights Reserved. www.stlouiscountymn.gov

Parcel Owner	Division/Department	Address 1	Address 2	City	State	Zip	Phone
Dept. of Natural Resources	Land Bureau	500 Lafayette Road		St. Paul	MN	55155	(651) 259-5300
Feperdo LLC		1932 2nd Avenue East		Hibbing	MN	55746	unlisted number
Ispat Inland Mining Company		5950 Old Highway 53	PO Box 1	Virginia	MN	55792	(218) 749-5910
Jones & Laughlin Steel Corp.		504 1st Street		Virginia	MN	55792	unlisted number
Pershern, Dennis		7959 Long Lake Road		Eveleth	MN	55734	(218) 144-2413
Pittsburgh Pacific Co		2521 First Avenue		Hibbing	MN	55746	unlisted number
Rendrag Inc		480 Broadway Suite C	PO Box 403	Saratoga Springs	NY	12866	(518) 587-6736
RGGS Land & Minerals LTD LP		100 Waugh Drive	Suite 400	Houston	TX	77077	(218) 749-1292
Rhude & Fryberger, Inc		605 West 37th Street		Hibbing	MN	55746	(218) 262-1032
Samargia, John Etal		602 Dakota Street		Gilbert	MN	55741	(218) 749-1514
Sludge Disposal Site Authority	City Engineers Office	327 South First Street		Virginia	MN	55792	(218) 749-3564
St. Louis County	Environmental Services	307 South 1st Street	Room 115	Virginia	MN	55792	(218) 749-9703
St. Louis County	Administration	100 N 5th Ave West		Duluth	MN	55802	(218) 726-2450
State of MN DNR Tax Specialist	Division of Lands & Minerals	500 Lafayette Road	Box 45 ST	St. Paul	MN	55055	(651) 259-5300
State Of MN MPCA		500 Lafayette Road		St. Paul	MN	55155	(651) 296-6300
Virginia City of		327 South First Street		Virginia	MN	55792	(218) 748-7500
Virginia Iron Company	Global Minerals Eng LLC	3920 13th Avenue East	Suite 7	Hibbing	MN	55746	(218) 262-0799

Minnesota Pollution Control Agency
520 Lafayette Road North
St. Paul, MN 55155-4194

Solid Waste Facility Application Checklist

Solid Waste Permit Program

Doc Type: Permit Application

Purpose: This checklist has been developed as a guide for permit application preparers and reviewers in order to assist with the submittal of a substantially complete permit application. Thoroughly review all applicable rules, statutes and guidance documents for further details and requirements. Minnesota Rules can be found at: https://www.revisor.mn.gov/rules/. All guidance documents can be found on the Minnesota Pollution Control Agency (MPCA) Solid Waste Publications webpage at: http://www.pca.state.mn.us/lupg880.

Many items listed below must be discussed in depth within the permit application submittal package. Be sure to include the most recently updated information, drawings and plans. Previously submitted documents **cannot** be referenced; all necessary documents must be included in this package. The permit application submittals should discuss all applicable MPCA Guidance Documents; include justification if the facility does not follow the guidance provided.

Instructions for permit application preparers: The following checklist must be completed and included with a permit application for all solid waste facilities. In the table below, indicate in the far left column the name and page number(s) of the document where the specified rule requirement is addressed. If the rule requirement does not apply, please indicate with "n/a" for not applicable. **The permit application will be determined to be incomplete if there are any blank spaces in this column.**

Document and page number	Minn. R. citation	MPCA use only		
		Completeness review		Comments
		Admin	Technical	
Permit App. Form TAB A page 6 of 6	7001.0050, item A Name, address, and telephone number of the owner of the facility for which the application is submitted and identification of the status of the owner as a federal, state, public, private, or other entity			
Permit App. Form TAB A page 6 of 6	7001.0050, item B If the operator of the facility for which the application is submitted is different from the owner, the name, address, and telephone number of the operator and identification of the status of the operator as a federal, state, public, private, or other entity			
Permit App. Form, TAB A pgs. 5 and 6 of 6	7001.0050, item C Name, address, and telephone number of the person who prepared the application			
Introduction TAB A p. 1	7001.0050, item D Description including the location of the business, plant, system, facility, or activity for which the permit is sought			
Permit App. Form TAB A p. 4 of 6 Introduction TAB A pgs. 3 and 4	7001.0050, item E General description of the materials handled, processed, stored, or disposed of by the applicant; and a statement of the nature and quantity of the materials proposed to be stored, processed, discharged, emitted, or disposed of during the period of the required permit, and proposed methods for control of these materials			

Document and page number	Minn. R. citation	MPCA use only		
		Completeness review		Comments
		Admin	Technical	
NA	7001.0060, item A For a corporation, the permit application must be signed by a principal executive officer of at least the level of vice-president or the duly authorized representative or agent of the executive officer if the representative or agent is responsible for the overall operation of the facility that is the subject of the permit application			
NA	7001.0060, item B For a partnership or sole proprietorship, the permit application must be signed by a general partner or the proprietor, respectively			
Permit App. Form TAB A page 6 of 6	7001.0060, item C For a municipality, state, federal, or other public agency, the permit application must be signed by either a principal executive officer or ranking elected official			
Permit App. Form TAB A page 6 of 6	7001.0060, item D If the operator of the facility for which the application is submitted is different from the owner, the permit application must be signed by both the owner according to items A through C above			
Permit App. Form TAB A page 6 of 6	7001.0060, item E For solid waste management facilities, the permit application must be signed by the facility owner and landowner under items A to C if the landowner is different from the owner of the facility for which the application is submitted			
Permit App. Form TAB A page 5 of 6	7001.0060, item F For a firm preparing the necessary reports and plans for a solid waste management facility permit application, the permit application must be signed by an engineer registered in Minnesota			
Permit App. Form TAB A p. 5 of 6	7001.0070 A person who signs a permit application shall make the following certification: "I certify under penalty of law that this document and all attachments were prepared under my direction or supervision in accordance with a system designed to assure that qualified personnel properly gather and evaluate the information submitted based on my inquiry of the person or persons who manage the system, or those persons directly responsible for gathering the information. The information is, to the best of my knowledge and belief, true, accurate, and complete."			

Document and page number	Minn. R. citation	MPCA use only		
		Completeness review		Comments
		Admin	Technical	
Permit App. Form TAB A p. 5 of 6	7001.3150 A person who signs a permit application or any portion of it, or any report required by a permit to be submitted to the commissioner or agency must make the certification required by part 7001.0070 and shall make the following additional certification: "I am aware that there are significant penalties for submitting false information, including the possibility of fines and imprisonment." An engineer registered in Minnesota must certify all technical documents, such as design drawings and specifications, engineering reports, and hydrogeologic studies, required to be submitted as part of a permit application or by a permit condition. The hydrogeologic report and all related groundwater and surface water monitoring reports must be signed by a person knowledgeable in the field of hydrogeology. This person must certify the quality of work performed and must have been responsible for the gathering and interpretation of the hydrogeologic data and the preparation of the reports.			
Introduction TAB A	7001.3300, item A General description of the facility			
TAB F	7001.3300, item B Industrial solid waste management plan in accordance with 7035.2535			
TAB C	7001.3300, item C Description of security procedures and equipment			
TAB C	7001.3300, item D Inspection schedule			
TAB G	7001.3300, item E Contingency action plan			
TAB C	7001.3300, item F(1) Description of procedures, structures or equipment to prevent operational hazards			
TAB C	7001.3300, item F(2) Description of procedures, structures or equipment to prevent run-off, run-on			
Design Report TAB B section II	7001.3300, item F(3) Description of procedures, structures or equipment to prevent ground and surface water contamination			
TAB C	7001.3300, item F(4) Description of procedures, structures or equipment to mitigate effects of equipment failure			
TAB C	7001.3300, item G Description of precautions to prevent ignition or explosions and emergency response plan			

Document and page number	Minn. R. citation	MPCA use only		
		Completeness review		Comments
		Admin	Technical	
TAB C	7001.3300, item H Traffic patterns and control			
TABC	7001.3300, item I Storage descriptions			
TAB G	7001.3300, item J Closure and Postclosure Plan			
TAB G	7001.3300, item K Closure cost estimates and evidence of financial assurance			
TAB G	7001.3300, item L Postclosure cost estimates and evidence of financial assurance			
TAB G	7001.3300, item M Corrective action cost estimates and evidence of financial assurance			
TAB B APP. E ENGG. PLANS	7001.3300, item N(1 to 18) Topographic and development map			
TAB B SECTION 11	7001.3300, item O Geologic and location information			
TAB C	7001.3300, item P(1 to 9) Operations and maintenance manual			
TAB B APP. D	7001.3300, item Q Construction QA/QC plan			
TAB E	7001.3300, item R Household hazardous waste management plan			
Eng. Plans	7001.3300, item S Full size copies of all engineering plan sheets			
TAB B App. E	7001.3300, item S Reduced copies of all engineering plan sheets (11" x 17")			
TAB A	7001.3300, item S Address labels for all adjacent properties owners and interested parties			
TAB A	7001.3300, item S Plan sheet with adjacent land owner information			
NA	7001.3300, item S Discussion of all previously granted variances			
NA	7001.3300, item S Variance application according to Minn. R. 7000.7000 for all new requests			
NA	7001.3300, item S Description of how and why the facility does or does not operate according to all applicable MPCA Guidance Documents			
TAB C	7001.3300, item S Inspection Form			

Minnesota Pollution Control Agency
520 Lafayette Road North
St. Paul, MN 55155-4194

Mixed Municipal Solid Waste (MSW) Landfill Application Checklist

Solid Waste Permit Program

Doc Type: Permit Application

Purpose: This checklist has been developed as a guide for permit application preparers and reviewers in order to assist with the submittal of a substantially complete permit application. Thoroughly review all applicable rules, statutes and guidance documents for further details and requirements. Minnesota Rules can be found at: https://www.revisor.mn.gov/rules/. All guidance documents can be found on the Minnesota Pollution Control Agency (MPCA) Solid Waste Publications webpage at: http://www.pca.state.mn.us/lupg880.

Many items listed below must be discussed in depth within the permit application submittal package. Be sure to include the most recently updated information, drawings and plans. Previously submitted documents **cannot** be referenced; all necessary documents must be included in this package. The permit application submittals should discuss all applicable MPCA Guidance Documents; include justification if the facility does not follow the guidance provided.

Instructions for permit application preparers: The following checklist must be completed and included with a permit application for all MSW land disposal facilities. In the table below, indicate in the far left column the name and page number(s) of the document where the specified rule requirement is addressed. If the rule requirement does not apply, please indicate with "n/a" for not applicable. **The permit application will be determined to be incomplete if there are any blank spaces in this column.**

Document and page number	Minn. R. citation	MPCA use only		
		Completeness review		Comments
		Admin	Technical	
TAB B	7001.3475, item A Certificate of Need (CON)			
TAB A Introduction TAB B	7001.3475, item B Description of waste types			
NA	7001.3475, item C EAW/EIS Status			
Eng. Plans TAB B Section IV TAB F	7001.3475, item D(1) Detailed plans and engineering report addressing liner system, leak detection, leachate collection and removal			
TAB B section IV Eng. Plans	7001.3475, item D(2) Detailed plans and engineering report addressing control of run-off, run-on			
TAB B section IV Eng. Plans	7001.3475, item D(3) Detailed plans and engineering report addressing management of collection, conveyance and holding facilities			
TAB C Section II	7001.3475, item D(4) Detailed plans and engineering report addressing wind dispersion control			
TAB B section IV TAB F	7001.3475, item D(5) Detailed plans and engineering report addressing treatment of run-on, run-off and leachate			
TAB B section IV	7001.3475, item D(6) Detailed plans and engineering report addressing phase development plan			
TAB B	7001.3475, item E Detailed site evaluation report			
TABC	7001.3475, item F Operation and maintenance manual			

Document and page number	Minn. R. citation	MPCA use only		
		Completeness review		Comments
		Admin	Technical	
TAB C	7001.3475, item G Description of inspection plan			
TAB G	7001.3475, item H Final cover report, postclosure care			
TAB C	7001.3745, item I Gas monitoring, collection and treatment system			
TAB G	7035.2665 to 7035.2805 Financial assurance requirements			
TAB A Fig. 1	7035.2815, subp. 2 Location			
TAB B section II	7035.2815, subp. 3(A to D) Hydrogeological evaluation			
TAB B section II	7035.2815, subp. 3(E) Phase I hydrogeologic evaluation			
"	7035.2815, subp. 3(F) Phase II hydrogeologic evaluation			
"	7035.2815, subp. 3(G) Phase II hydrogeologic evaluation report			
"	7035.2815, subp. 3(H) Phase III hydrogeologic evaluation			
"	7035.2815, subp. 3(I)(1) Phase IV hydrogeologic evaluation work plan			
"	7035.2815, subp. 4 Groundwater performance standards			
TAB B	7035.2815, subp. 5(A) Engineering report			
TAB B Eng. Plans	7035.2815, subp. 5(B) Phase development plan			
TAB B section II	7035.2815, subp. 5(C) Buffer zone			
Eng. Plans TAB B	7035.2815, subp. 5(D) Surface water drainage			
TAB B, TAB C, TAB G	7035.2815, subp. 5(E) Design and maintenance of slopes and drainageways			
TAB B Eng. Plans	7035.2815, subp. 5(F) Sediment settling pond			
TAB B Eng. Plans	7035.2815, subp. 5(G) Final contours			
TAB B Eng. Plans	7035.2815, subp. 6 Cover system design			
TAB B Eng. Plans	7035.2815, subp. 7 Liner system design			
TAB B App. A	7035.2815, subp. 8 Cover and liner evaluation			

Document and page number	Minn. R. citation	MPCA use only		
		Completeness review		Comments
		Admin	Technical	
TAB F	7035.2815, subp. 9 Leachate collection and treatment design			
TAB B Section II	7035.2815, subp. 10 Water monitoring system design			
TAB C Eng. Plans	7035.2815, subp. 11 Gas monitoring and collection system design			
TAB B App. D	7035.2815, subp. 12 Construction requirements			
TABC	7035.2815, subp. 13 Operation and maintenance requirements			
TAB B Section II, TABF	7035.2815, subp. 14 Sampling and analysis plan			
TAB G	7035.2815, subp. 15 Contingency action plan			
TAB G	7035.2815, subp. 16 Closure and postclosure plan			

TAB B

Design Report
St. Louis County Regional Landfill

Prepared and Submitted by:

ST. LOUIS COUNTY ENVIRONMENTAL SERVICES DEPARTMENT
307 1st Street South
Virginia, Minnesota 55792

NORTHEAST TECHNICAL SERVICES, INC.
526 Chestnut Street West
P.O. Box 1142
Virginia, Minnesota 55792

and

LIESCH ASSOCIATES, INC.
350 St. Peter Street
St. Paul, Minnesota 55102

July 2013

Table of Contents

Page

I. INTRODUCTION 1

A. Background 1
B. Purpose 3

II. SUMMARY OF HYDROGEOLOGIC CONDITIONS 4

A. Hydrogeology 4
B. Environmental Monitoring System 5
Groundwater Monitoring 5
Surface Water Monitoring 6
Landfill Liner Leak Detection 6
Leachate Pond Leak Detection 6
Leachate Analytical Monitoring 7
Spray Irrigation - Operation Monitoring 7
Spray Irrigation Area - Water Quality Monitoring 8
Landfill Gas Monitoring 8
Slope Stability Monitoring 8
Monitoring Schedules 9
C. Monitoring Contingency Plans 9
Groundwater Monitoring Contingency Plan 9
Leak Detection Monitoring Contingency Plan 11
Landfill Gas Monitoring Contingency Plan 11
Tiered Landfill Gas Contingency Plan 12
Sampling Plan 12
Water Quality Monitoring Summary and Sample Order Table Rationale 13
Groundwater Sample Collection Depths, Purging Rates and Sampling Methods Table 14
Monitoring System Analytical Guide Table 15
Analytical Parameter Tables 17
Volatile Organic Compounds Method 8021/MDH 465E 18
Inorganic Methods Table 20
Analytical Reference Summary Table 21

III. SOILS FOR CONSTRUCTION 22
A. Introduction 22
B. Soil Components 22
Native Fill 22
Clay Barrier Layer 22
Drainage Layer 23
Intermediate Layer 23
Coarse Aggregate 23
Cover Soils 23
Topsoil 23
Class 5 23

IV. DESIGN 24

A. Introduction 24
B. Waste Flows/Site Capacity/Phasing 24
C. Subbase Preparation 24
D. Base Grades 24
E. Liner Design 25
F. Leachate Collection System 26
1. Collection Pipes 26
2. Leachate Storage Sump 27
3. Leachate Head Build-Up 27
4. Leachate Sump Manhole 27
5. Side Slope Risers 27
6. Leachate Sump Leak Detection 27
7. Leachate Lift Station and Forcemain 28
8. Leachate Storage Ponds 28
9. Leachate Spray Irrigation Area 28
G. Final Cover Design 28
H. Surface Water Control 29
1. Introduction 29
2. Run-off Volume and Peak Discharge Rates 30
3. Sedimentation Pond Design 30
Culvert Designer/Analyzer Reports 32

4. Sedimentation Generation Rates 35
I. Gas Management and Venting 39

FIGURE

1 St. Louis County Regional Landfill Environmental Monitoring Detail

TABLE

1 Design Volumes

APPENDICES

A HELP Model Results
B Pipe Strength Calculations
C Technical Specifications
D Construction Quality Assurance Manual
E Facility Drawings (11 x 17 Format)

SHEETS

1 Cover Sheet
2 Existing Conditions Plan
3 Overall Base Grade Plan
4 Overall Final Cover Plan
5 Gas Collection System Plan
6 Cross Sections
7 Liner System Details
8 Phase 1 and Phase 2 Leachate Collection System Details
9 Phase 4 Leachate Collection System Details
10 Phase 6 Leachate Collection System Details
11 Phase 1 and Phase 2 Leachate Collection System Details
12 Phase 4 Leachate Collection System Details
13 Phase 6 Leachate Collection System Details
14 Closure Details
15 Closure Details
16 Existing Primary Spray Field Configuration
17 Proposed Expansion Secondary Spray Field Configuration
18 Leachate Spray Application Details

Section Introduction

A. BACKGROUND

The St. Louis County Regional Landfill (Landfill) is located on top of mine dump material consisting of a heterogeneous mixture of rocks, sand, silt, and clay. Mine filling began in the 1920's. The mine dump material ranges in thickness from 20 feet along the northern landfill boundary to 60 to 80 feet along the southern perimeter.

The Landfill was issued permit SW- 405 from the Minnesota Pollution Control Agency (MPCA) on April 30, 1993. Under this permit the County was authorized to dispose of 1,650,000 cubic yards of industrial and mixed municipal solid waste and cover. The 160-acre site is located approximately 2.5 miles east of Virginia, Minnesota and 2.5 miles north of State Highway 135 on a 637-acre County owned parcel of land which includes approximately forty-two (42) acres for disposal and approximately twenty-five (25) acres for leachate pond aeration treatment/spray irrigation. The landfill is located in Section 10, Township 58 North, Range 17 West, in St. Louis County, Minnesota. The St. Louis County Environmental Services Department also owns 120 acres of buffer property adjoining the landfill in Section 11, Township 58 North, Range 17 West.

The County began development of the Regional Landfill in 1993 by constructing a 9-acre cell (Phase 1) with associated road, leachate management, scale, shop, and other facilities. During construction of the first phase of the landfill, areas of subsidence occurred immediately after significant precipitation. The settlement was attributed to rapid downward percolation of rainwater pulling fine-grained sediment with it to cause depressions. To minimize future settlement below the landfill base, a 5-foot subcut with reinforcing geotextile was approved by the MPCA and required in all future cell construction. Two feet of low permeability clay was placed and compacted above this base material. A 60-mil high-density polyethylene liner was placed over the low permeability clay layer and a one foot drainage layer of granular material was placed over the liner. A leachate collection system was installed within the drainage layer.

The leachate system collects liquids from the bottom of the landfill via a system of pipes and pumps it into two holding ponds where the leachate is aerated to promote biological processes which remove volatile organic compounds. These ponds also encourage the settlement of particulates from the leachate. After aeration treatment and testing, the leachate is sprayed onto an adjacent 22.5-acre field for further biological processing. The design capacity of 6,000,000 gallons for leachate storage has proven to be more than adequate. In the summer of 1999, the leachate management system was upgraded by the addition of a Programmable Logic Controller (PLC), modifications to the existing sprayers, and the installation of 12 additional sprayers. In 2009 the leachate spray field was upgraded to maximize the use of its full 22.5 acres by replacing

the vertical turbine pump, replacing the old actuated valve system, and the addition of more fixed spray heads.

Upgradient and downgradient groundwater test wells were installed during construction of the landfill and are sampled and tested in the spring, summer, and fall by an independent laboratory. Test results have shown no contamination in these wells. This site has been regularly inspected by the MPCA and has been found to be in compliance. (In the event groundwater constituents ever exceed allowable limits, St. Louis County will take all necessary actions to determine the need for mitigation and remediation.)

Phase 1A, a 6.7 acre cell, was constructed in 1995. In July 1996, St. Louis County submitted a permit re-issuance application to update landfill information and request additional landfill volume and design modification approval. The landfill redesign reduced the footprint of the facility from 42 acres to 29 acres, but increased the facility's ultimate design capacity from 1,650,000 million cubic yards to 1,990,000 million cubic yards, including final cover. The Minnesota Pollution Control Agency (MPCA) landfill permit was issued in July 1999, granting the landfill a new Certificate of Need (CON) of 429,625 cubic yards, 1,366,500 cubic yards of permitted capacity, and 1,990,000 cubic yards of ultimate capacity. In April 2003, St. Louis County submitted a Comprehensive Solid Waste Management Plan Update to the Minnesota Office of Environmental Assistance requesting a 10-year CON of 774,560 cubic yards for the years 2003 through 2013. The CON request was approved on November 14, 2003.

Additional landfill activities have included the construction of Phase 2, a 2.5 acre cell and associated leachate system expansions and improvements in the summer and fall of 1999; cell closure totaling 3.8 acres for parts of Phases 1A and 1 in the summer of 2000; construction of Phase 3, a 2.8 acre cell in the summer of 2002; and construction of Phase 4, a 2.8 acre cell in the summer of 2004. MPCA certification for these projects has been received by the County.

Phases 5 & 6 were constructed in 2008 and 2012, respectively. Certification of the construction of these cells has also been provided by the MPCA.

On land adjacent to the landfill, the County also constructed a household hazardous waste collection and storage facility in 1999 and a recyclable materials processing facility in 2000.

The Regional Landfill accepts mixed municipal solid waste (approximately 52,000 tons per year), coal ash (approximately 10,000 tons per year), and industrial waste (approximately 10,000 to 12,000 tons per year). As of December 31, 2006, approximately 1,256,503 cubic yards of waste (MSW, industrial, demolition and asbestos) and cover have been placed in the landfill.

The scale attendant utilizes an observation platform to screen incoming waste for acceptability. Additionally, the landfill operator monitors incoming waste as it is placed in the active tipping area of the landfill. Unacceptable waste deposited in the landfill is removed and properly disposed.

The quantity and waste type of each load delivered to the landfill is recorded on a computerized landfill management system (LMS). The vertical and horizontal coordinates of the daily working face are also recorded on the LMS. As a result, the location of all waste placed in the landfill can be identified by the date it was landfilled.

Laboratory analysis of industrial waste must be submitted to the County Hazardous Waste/Industrial Waste Specialist for review and approval prior to acceptance in the landfill. Industrial wastes accepted at the landfill include empty pesticide containers (if triple-rinsed), asbestos, foundry wastes, incinerator ash, dry paint residue, sandblasting waste, and solidified ink sludge.

In 1996, a large generator of spent casting sand, Northern Castings, notified St. Louis County that it was considering several disposal options for its waste material. One of the options investigated was the use of its waste material as alternative daily cover at the County's Regional Landfill. The St. Louis County Solid Waste Department contacted the Minnesota Pollution Control Agency and requested approval from them to use spent casting sand as an alternative daily cover material. Approval was granted and the Department established a new waste code category called Beneficial Reuse Material to acknowledge the usefulness of this material at the landfill. This also resulted in reduced disposal fees for Northern Castings. Refer to the Industrial Solid Waste Management Plan included as part of these permitting documents.

Hazardous wastes, liquid wastes, and special wastes such as yard waste, scrap metal, waste oil, oil filters, automobile batteries, fluorescent tubes, appliances, used antifreeze, and tires are handled as separate waste streams and are not landfilled.

B. PURPOSE

The original design of the landfill has been modified in 1999 and 2004. There are no modifications proposed in this permit reissuance application with the exception of the following:

- Re-Phasing of remaining cells; and
- Proposed expansion of the leachate spray irrigation site.

Section II
Summary of Hydrogeologic Conditions

A. HYDROGEOLOGY

The hydrogeologic conceptual model of the regional landfill area includes the following:

1. Mine overburden dump that ranges in thickness from 20 to 80 feet. Material consists of clay, silt and sand with cobbles and boulders throughout.

2. Native unconsolidated, glacial drift underlies the mine dump with thicknesses ranging from 2 to 36 feet. Sediments consist of fine to medium grained sand with varying amounts of silt and clay.

3. Archean, mafic metavolcanic bedrock underlies the glacial drift.

4. An unconfined aquifer exists beneath the area with the water table within the mine dump material. Thickness of the vadose zone varies from 25 to 50. The bedrock forms the lower confining unit leading to a saturated thickness of approximately 18 to 47 feet.

   Horizontal hydraulic conductivity estimates are as follows:

   - Native glacial drift — 9.6×10^{-5} cm/sec.
   - Mine dump material — 1.2×10^{-4} cm/sec below the landfill to 4.4×10^{-5} cm/sec below the leachate treatment area.

   Vertical hydraulic conductivity estimates are as follows:
   - Native glacial drift — 1.0×10^{-6} cm/sec.
   - Mine dump material — 1.0×10^{-5} cm/sec below the landfill to 3.4×10^{-7} cm/sec below the leachate treatment area.

5. Groundwater flow direction is southeasterly with flow dynamics influenced by:
   - irregularities in the bedrock surface
   - heterogeneities in the glacial materials
   - native glacial topography.

Most important is the existence of a, pre-mine dump, northwest-southeast trending, drainage swale and the fact that mine dump materials beneath the leachate treatment area (northeast portion) are finer grained and of lower hydraulic conductivity.

Water table contour maps generated from each set of static water levels are very similar and indicate that, although static water levels may vary over 5.5 feet in several wells, the flow direction varies only slightly over time.

B. ENVIRONMENTAL MONITORING SYSTEM INTRODUCTION

The Landfill environmental monitoring system (EMS) includes nine separate monitoring categories presented below.

1. Groundwater monitoring.
2. Surface water monitoring.
3. Landfill liner leak detection.
4. Leachate pond leak detection.
5. Leachate analytical monitoring.
6. Spray irrigation area - operation monitoring.
7. Spray irrigation area - water quality monitoring.
8. Landfill gas monitoring.
9. Slope stability monitoring.

Water Quality Annual Reports (annual report) are submitted by February 1 of each calendar year. The annual reports contain the data summary of the previous year's monitoring results. Annual reports also evaluate the preceding year's monitoring data relative to long-term water quality trends and identify any compounds that exceed the groundwater performance standards established in Minnesota Rules 7035.2815, subp. 4, Minnesota Department of Health (MDH), health risk limits (HRL) and/or limit tables established specifically for the Landfill. The sampling and analysis protocols are reviewed annually, and if any adjustments are necessary, prior approval from Minnesota Pollution Control Agency (MPCA) staff are obtained before implementation.

GROUNDWATER MONITORING

The water quality monitoring system at the Landfill includes 14 monitoring wells for monitoring groundwater quality surrounding the Landfill. The following tables present a summary of the water quality monitoring system regarding locations of the monitoring wells and surface sites in relation to the Landfill. The table also includes the sampling order rationale for the groundwater monitoring locations. The following tables show the groundwater collection depths, purging rates and sampling methods used at each monitoring well location. The analytical guide presented in the following tables shows a summary of the analytical parameters for each sampling location during each scheduled monitoring event.

SURFACE WATER MONITORING

Three surface water monitoring points SS-1, -2, and -3 are shown on Figure 1. Surface water sample locations SS-1 and SS-3 are located near the base of the mine dump where groundwater seeps have been identified. A Stormwater Pollution Prevention Plan (SWPPP) has been prepared that discusses stormwater controls, conveyance, and best management practices for reducing pollutant loads in stormwater flows. Surface site SS-2 is near the outlet of the storm water retention basin. SS-2 is often dry, making sample collection impossible during most monitoring events. However, during wet seasons and/or after significant precipitation events, samples can be collected and the site monitors the potential transport of landfill contamination from the precipitation events. The following tables includes the analytical parameters for surface water samples collected during each scheduled monitoring event.

LANDFILL LINER LEAK DETECTION

Four landfill liner leak detection risers; LLDR-A, -B, -C, -D are located along the southeast and east (down-gradient) margin of the waste fill area of the Landfill (Figure 1). The purpose of the leak detection risers is to provide monitoring points between the Landfill liner and the groundwater surface. Liquid that accumulates in the risers is analyzed for volatile organic compounds (VOC), which provides adequate indication of contamination from landfill liner leaks.

LEACHATE POND LEAK DETECTION

Six leachate pond leak detection risers; PLDR-1 -2, -3, -4, -B, and -C are present for leak detection from the leachate treatment ponds at the Landfill (Figure 1). PLDR-1 and PLDR-4 monitor the west treatment pond and PLDR-2 and PLDR-3 monitor the east treatment pond. Each of the two pairs of leak detection risers is constructed with horizontal intakes placed in the coarse granular (gravel) layer between the two layers of impermeable synthetic pond liners of each treatment pond. Since the leak detection risers are "paired" for each of the two horizontal intakes, only the PLDR-1 and PLDR-2 are utilized for pumping and sample collection. PLDR-B and PLDR-C have vertical intakes located between the treatment ponds. Pumped liquid is discharged directly back into the leachate treatment ponds.

Modifications were made to the leachate pond leak detection riser system during 2000 following the completion of the *Leachate Treatment Pond Liner Investigation Report (NTS, April 2000)*. Before the pond liner investigation in 1999, the pumping of the leak detection riser pipes was performed by manually activated pumps. The volume of liquid pumped was determined (and recorded) by timing a known pumping rate. Based upon the conclusions of the pond liner investigation, automatically activated pumps with flow meters were installed in PLDR-1 and PLDR-2 in April 2000 and quarterly VOC analyses was added to the *Monitoring System Analytical Guide*. The Leachate Management Plan proposes measuring water levels and liquid volumes in the leak detection risers again during the summer of 2013, in addition to analyzing the liquid for VOC.

LEACHATE ANALYTICAL MONITORING

Leachate is treated by aeration in two ponds. The east leachate pond is used for primary treatment and the west leachate pond is used for the secondary treatment. Untreated leachate produced by the Landfill is pumped to the leachate treatment ponds and monitored quarterly. The samples are collected at the leachate riser vault structures (lift stations) before the leachate is pumped to the primary leachate treatment pond. Samples are analyzed for VOC, metals, general chemistry and field characteristics are measured as indicated in the following tables.

Treated leachate is collected from an irrigation pump station wet well (in the leachate spray irrigation building) and monitored monthly during the spray irrigation season from May through September (five monitoring events). The same analytical parameters for untreated leachate apply to treated leachate (spray irrigation liquid). Treated leachate is also monitored for total kjeldahl nitrogen (TKN). A summary of the leachate monitoring is included in the following tables.

SPRAY IRRIGATION - OPERATION MONITORING

Besides the monitoring parameters described above for leachate produced at the Landfill, operation monitoring is conducted at the leachate spray irrigation areas (LSIA). The monitoring is used to regulate the application rate and/or duration of leachate spraying. The north 21 acre LSIA is the primary spray irrigation application site and utilizes two (2) soil moisture monitoring locations. Each location has two installed soil moisture probes. Two probes are installed in nested configurations 12 and 24 inches below the ground surface (BGS) at each monitoring location. The probes are installed each spring before spray irrigation begins. With this configuration, soil moisture is monitored to provide optimal application rates over the north LSIA.

In addition to the soil moisture probes, the spray irrigation area is monitored for soil moisture using tensiometers (IRROMETR® Model "LT"). These low-tension instruments are designed for better definition in granular soils and environments where moisture conditions change rapidly. The tensiometers are installed in a nested configuration 12 and 24 inches BGS near the center of the LSIA.

The south LSIA is monitored for control of soil moisture during the irrigation season, only when in operation. The south LSIA is used only for back-up capacity when the north LSIA is inadequate to handle the leachate volume. The operational moisture monitoring system includes two soil moisture probe locations with nested installations as described for the north LSIA. One additional location with a nest of two tensiometers is used during operation as described for the north LSIA. Since the soil moisture probes and tensiometers are installed each spring before the spray irrigation season their locations are not included on the site detail drawings (Figure 1).

Leachate spray irrigation soils are tested in the spring, prior to the irrigation season and are compared against Minn. Rules 7041. Limits for soluble salts in the soils are 4 mmhos/cm. 2007 results for the soilsalinity samples were 0.2 and 0.4 mmohs/com. In addition, the metal loading calculations compared to cation exchange capacity indicate that metal loading will not present a lifetime limitation for the soils. Therefore, the site soils have a significant remaining lifetime, particularly under the County's good management practices. However, a tentative soil replacement plan which would address two different spray radius' per year over several years will ultimately accomplish total soils replacement without negatively impacting the use of the spray irrigation field. A start date for the soil replacement plan would be determined in a future Spray Irrigation Operation Report section of the Annual Report.

SPRAY IRRIGATION AREA – WATER QUALITY MONITORING

The LSIA have additional water quality monitoring capability from four (4) suction lysimeters in the north and three (3) suction lysimeters in the south LSIA. TIMCO™ (or equivalent) Porous Ceramic Lysimeters (cup type) with permanent lysimeter head assemblies (vacuum/pressure gauge and taps for vacuum/pressure sampling lines mounted in a waterproof assembly) were installed. All of the suction lysimeters were installed between 4 – 8 feet BGS. The suction lysimeters were installed during the fall of 1999.

The suction lysimeters provide potential vadose zone water quality sampling directly below the spray irrigation areas and are monitored monthly during the spray irrigation season. Field measurements are obtained from each of the north suction lysimeters and the sample volumes are then combined in equal volumes for a composite suction lysimeter sample. The south spray site

suction lysimeters are treated similarly. The samples are analyzed for metals, general chemistry parameters and field characteristics. If sample volume prevents analysis of all the general chemistry and field characteristics analytical parameters, nitrate + nitrite, ammonia nitrogen and boron are considered the priority analytes for determining transport from the spray irrigation process.

LANDFILL GAS MONITORING

Landfill gases are monitored quarterly (including winter) at five locations of the Landfill. The locations include Drainage Ditch A, Lift Station and Blower Building. In addition, subsequent to the re-permitting of the Landfill in 1999 two monitoring points (GP-1 and GP-2) were added to the landfill gas monitoring system according to the *Gas Probe Installation Work Plan and Landfill Gas Contingency Plan (NTS, January 2000)*. Monitoring point GP-2 was removed during the expansion of Phase IV of the Landfill in 2011.

Two additional temporary probes (TP-1 and TP-2) were placed along the south and east slopes of the landfill near the compliance boundary. These two gas probes were to be installed temporarily as drive points for four quarterly monitoring events and then removed if no gas was detected. The probes remain installed but to date no landfill gas has been detected. Since these probes were not installed as part of the permanent landfill gas monitoring system, they will not be routinely monitored. However, since they remain in place, it is proposed that they serve as contingency gas monitoring locations. If landfill gas is detected in any of the permanent monitoring locations TP-1 and TP-2 will be monitored (see Landfill Gas Monitoring Contingency Plan Table).

The landfill gas monitoring is performed with a Landtec GA-90 gas monitor capable of measuring methane, carbon dioxide, oxygen and barometric pressure. An HNu 101 photo-ionization detector (PID), calibrated to a benzene standard, is connected to the exhaust port of the GA-90 to measure the total volatile hydrocarbons. To date no elevated landfill gas has been measured. The landfill gas monitoring points are shown on Figure 1.

SLOPE STABILITY MONITORING

The Landfill was built on top of a waste rock/lean ore mine dump, which is approximately 60 feet above the native topography. Settlement and lateral spreading could compromise the synthetic liner. Monitoring the slope stability is performed by measuring deflections in two installed inclinometer casings (INC-1 & INC-2) located along the south and east slopes at the southeast portion of the facility (Figure 1). The inclinometer casings are 64 and 55 feet deep, respectively.

Inclinometer monitoring frequency is once per year (fall quarter). If increased construction or other operations are conducted that could impact slope stability, additional monitoring may be justified. Results are reviewed and discussed in the Annual Report. To date, no indicators of slope instability have been identified.

MONITORING SCHEDULES

The proposed schedule for sampling of the water quality monitoring system is presented in the following tables. Specific analytical parameters, methods, reporting limits and quality assurance and quality control (QA/QC) sample requirements for each event are summarized in the following tables. Sample preservation and holding times are presented in Appendix III of the *June 1999 Water Quality Monitoring Plan and Water Quality Monitoring Protocol*.

Any changes in the monitoring system, field procedures, and/or analytical parameters or the contract laboratory, must be submitted in an amended Monitoring Protocol or Addendum by the Permitee to the Commissioner within 30 days of the proposed changes. MPCA prior approval of the changes is required before initiation of the modified monitoring procedures.

MONITORING CONTINGENCY PLANS

GROUNDWATER MONITORING CONTINGENCY PLAN

The groundwater monitoring frequency at the Landfill was reduced in 2001. Specifically, monitoring well sampling for VOC (Analytical Parameters) were reduced from three quarterly events (spring, summer, and fall) to semi-annual events (spring and fall). This schedule was warranted since to date no VOC have been detected consistently or at concentrations approaching any established intervention limits. Since sample analyses of VOC from the water quality monitoring system provides definitive data indicating transport of dissolved phase contamination from the Landfill, a contingency plan for re-sampling and analysis at any groundwater monitoring point has been established.

Groundwater monitoring frequency for metal parameters has been reduced to a biannual schedule (spring monitoring event every two years) starting in the spring of 2000. While dissolved metals in groundwater can indicate contaminant transport, several of the metal analytes monitored have elevated natural background concentrations. Therefore, contingency re-sampling and analysis for metal parameters has to consider the range of background concentrations.

VOC Contingency Plan

Established intervention limits (IL) and HRL for the 465E list of compounds are consumption criteria. The Landfill compliance boundary is designed to provide adequate protection for any potential off-site groundwater receptor. Therefore, the contingency re-sampling plan for VOC is based upon the laboratory reporting limits for each analyte not any specific risk limit. However, a Limits Table has been issued by the MPCA for the Landfill as part of the permitting process. The Limits Table provides site-specific intervention limits for groundwater analytes monitored at the facility. The IL listed on tables in this work plan are from the Landfill Permit SW-405 Limits Table.

Contingency re-sampling of any monitoring point will be performed if a VOC analytical result is greater than five (5) times the laboratory reporting limit (RL), or above the IL as defined in the Limits Table (whichever is the lowest). Table 4 lists the 465E VOC list of analytes with measurement units, Method Detection Limits (MDL), RL, IL and HRL for each parameter.

Contingency re-sampling and analysis will be scheduled within six (6) weeks after reporting of an anomalous analytical result. This along with results from regular scheduled monitoring events, prior and after the contingency results, will provide three "quarterly" data results for any significant detection. Three results provide verification and potentially an indication of the concentration trend for any significant analyte detection. After three verified significant detection results are documented, the

appropriate response action including but not limited to changing the monitoring frequency can be assessed.

Inorganic/Metals Contingency Plan

Inorganic and metal parameters monitored at the Landfill are listed in Table 5 with their MDL (MDL=RL). Of all the parameters monitored, eight have established health risk concentrations (IL and/or HRL). The eight analytes include:

ANALYTE	MDL/RL (ug/L)	IL[1] (ug/L)	HRL (ug/L)
Arsenic	2	12.5	--
Cadmium	0.2	1	4
Chromium[2]	1	25	100
Copper	1	250	--
Lead	2	--	--
Manganese	10	25	100
Mercury	0.2	0.5	--
Zinc	10	500	2000

[1]IL from Limits Table for SLCR-LF Permit SW-405.
[2]Based on Total Chromium (Cr) analysis. If IL is exceeded, analysis for Cr^{6+} will also be performed.

Except for manganese, the IL will be used as the re-sampling contingency concentration value for metal parameters. The natural background concentrations of manganese in groundwater from monitoring wells at the Landfill generally exceed established health risk standards. This is explained by the location of the Landfill on an iron mining overburden/lean-ore dump. Mesabi Range and other Minnesota iron ore deposits have associated manganese enrichment. Anomalous manganese will be based upon the calculated mean plus two standard deviations of all previous analysis results from each monitoring well.

The chromium analysis method (EPA 218.2) proposed in the *Water Quality Monitoring Workplan (NTS, June 1999)* is for total chromium. However, the Limits Table in the Solid Waste Permit Reissuance (MPCA, July 1999) also lists "Chromium VI" that requires additional analysis. Since total chromium analysis results from all sample locations have never exceeded the IL (25 ug/L), it is proposed that Chromium VI analysis be performed only as a resample contingency if the IL is exceeded.

All inorganic/metals analyses data suspected of being significantly anomalous will be plotted to further determine the concentration trend of the suspect analytical result relative to historical results. If these data suggest a significant rise in concentration, the individual monitoring point will be re-sampled and analyzed to verify the suspect result before the next regularly scheduled monitoring event. Trend charts of the inorganic/metal parameters will be included in the Annual Report submitted by February 1 of each year.

LEAK DETECTION MONITORING CONTINGENCY PLAN

Samples from the LLDR and PLDR are analyzed quarterly for VOC. The VOC analysis results are the most definitive indications of leachate leakage. If, significant increasing trends in VOC concentrations occur, monitoring characteristics for metals and general parameters will be added during the next scheduled event.

LANDFILL GAS MONITORING CONTINGENCY PLAN

The Landfill gas contingency plan proposes actions for levels of methane detected in permanent gas probe (GP-1) and the other building or structure locations where gas monitoring is routinely conducted. The following table presents Tiered response actions based on levels of methane (adjusted LEL readings).

TIERED LANDFILL GAS CONTINGENCY PLAN

Tier	Explosimeter Reading Action Levels at Landfill Gas Monitoring Sites	Response Actions
I	**>0% and <25%**	Repeat gas monitoring event in 1 week. Repeat monitoring weekly including temporary gas probes TP-1 and TP-2, until levels drop to non-detectable levels. When levels drop to non-detectable, repeat gas monitoring in one month. If levels are non-detectable in one month, continue quarterly monitoring. Ventilate buildings regularly. Install a hazardous gas monitor/alarm in the building closest to gas probe where gas was detected.
II	**≥ 25% and <100%**	Immediately evacuate occupied structure(s) if >25% LEL is detected. The structures should not be occupied until appropriate response actions have been completed and monitoring confirms safe LEL readings. Perform daily gas monitoring including temporary gas probes TP-1 and TP-2, until explosimeter readings drop to Tier I Action Levels. Then perform Tier I response action. Ventilate and monitor LEL in buildings regularly. Install a hazardous gas monitor/alarm in the building where gas was detected.
III	**100%**	Perform all tasks under Tier II. Design and install a gas collection system to gas collection system to prevent gas migration from the landfill to the building closed to the gas probe where gas was detected. Perform all tasks under Tier II until gas collection system is installed.

SAMPLING PLAN

The sampling order, locations and criteria for determining the sampling order are summarized in the following tables.

WATER QUALITY MONITORING SUMMARY AND SAMPLE ORDER RATIONALE

MONITORING POINT	SAMPLE ORDER	RELATIVE LOCATION	SAMPLE TARGET
MW91-6	1	Upgradient of Landfill	Water Table
MW91-7	2	Upgradient of Landfill	Water Table
MW91-8	3	Upgradient of Leachate	Water Table
MW91-3	4	Downgradient from Landfill	Water Table
MW91-9	5	Downgradient from Leachate	Water Table
MW91-10	6	Downgradient from Leachate	Water Table
MW91-5A	7	Downgradient from Landfill	Water Table
MW91-5B	8	Downgradient from Landfill	Bottom of Aquifer
MW91-1	9	Downgradient from Landfill	Water Table
MW92-1A	10	Downgradient from Landfill	Water Table
MW91-4A	11	Downgradient from Landfill	Water Table
MW91-4B	12	Downgradient from Landfill	Bottom of Aquifer
MW91-2A	13	Downgradient from Landfill	Water Table
MW94-2B	14	Downgradient from Landfill	Bottom of Aquifer
SS-1	15	Downgradient from Leachate & Upgradient of Landfill	Surface Water
SS-2	16	Downgradient from Landfill (detention pond)	Surface Water
SS-3	17	Downgradient from Landfill	Surface Water
MW03-01		Upgradient of Landfill Static WL's only	Water Table
MW03-02		Upgradient of Landfill Static WL's only	Water Table
MW03-05		Upgradient of Landfill Static WL's only	Water Table

Static water levels are measured during each monitoring event, and one field duplicate sample is collected per ten collected samples.

GROUNDWATER SAMPLE COLLECTION DEPTHS, PURGING RATES AND SAMPLING METHODS

MONITORING POINT	AVERAGE DEPTH TO STATIC WATER FROM TOP OF CASING (ft)	TOTAL WELL DEPTH FROM TOP OF CASING (ft)	EVACUATION PROCEDURE	COLLECTION AND PURGE DEPTH(1) (ft)	PURGE METHOD	PURGE RATE (2) (GPM)	SAMPLE METHOD(3)	SAMPLE RATE (4) (ml/min)
MW91-6	30	40	S	Ë33	Bladder	0.5	Bladder	500
MW91-7	26	33	S	Ë29	Bladder	0.25	Bladder	500
MW91-8	35	46	S or R	Ë38	Bladder	0.5	Bladder	500
MW91-3	49 (Often Dry)	49	R	Ë49	Bladder	0.5	Bladder	500
MW91-9	51	65	R	Ë54	Bladder	0.5	Bladder	500
MW91-10	53	57	S or R	Ë56	Bladder	0.25	Bladder	500
MW91-5A	61	69	S	Ë64	Bladder	0.25	Bladder	500
MW91-5B	65	83	S	Ë68	Bladder	0.5	Bladder	500
MW91-1	57	65	S	Ë61	Bladder	0.25	Bladder	500
MW92-1A	54	63	S	Ë57	Bladder	0.25	Bladder	500
MW94-2B	59	77	S	Ë62	Bladder	0.5	Bladder	500
MW91-4A	70	77	S	Ë73	Bladder	0.25	Bladder	500
MW91-4B	70	91	S	Ë73	Bladder	0.5	Bladder	500
MW91-2A	58	60	S	Ë61	Bladder	0.2	Bladder	500
[1]MW91-2B	58	81	N/A	N/A	N/A	N/A	N/A	N/A

[1]MW91-2B was damaged and is only used for static water level measurements. S = Stabilization R = Recovery

(1) Collection depths for stabilization wells at the LF are approximately 3 feet below static water level. Well development and hydraulic conductivity determinations indicate the wells have sufficient hydraulic conductivity to prevent appreciable drawdown when purging at or below 0.5 gallons per minute.

(2) Observed purge rates for each well compared to the proposed purge rates is recorded on the field sampling form. If warranted, the purge rate may be adjusted. If significant drawdown occurs, a decreased purge rate may be required. Any changes to the proposed purging and sampling rates are discussed with MPCA staff.

(3) The purge pump is used for sampling all MW wells at the landfill.

(4) No sampling rate will exceed 500 ml/min in accordance with the 1995 MPCA groundwater sampling protocol.

MONITORING SYSTEM ANALYTICAL GUIDE

GROUNDWATER MONITORING SYSTEM			
LOCATION ID	***Spring (Apr. 1 - May 15)***	***Summer (July 1 – 31)***	***Fall (Oct. 1 – 31)***
MW91-6	Tbl 3A, 3B[1], 3C, 3D, 3G	Contingency[2]	Tbl 3A, 3C, 3D, 3G
MW91-7	Tbl 3A, 3B[1], 3C, 3D, 3G	Contingency[2]	Tbl 3A, 3C, 3D, 3G
MW91-8	Tbl 3A, 3B[1], 3C, 3D, 3G	Contingency[2]	Tbl 3A, 3C, 3D, 3G
MW91-3	Tbl 3A, 3B[1], 3C, 3D	Contingency[2]	Tbl 3A, 3C, 3D
MW91-9	Tbl 3A, 3B[1], 3C, 3D, 3G	Contingency[2]	Tbl 3A, 3C, 3D, 3G
MW91-10	Tbl 3A, 3B[1], 3C, 3D, 3G	Contingency[2]	Tbl 3A, 3C, 3D, 3G
MW91-5A	Tbl 3A, 3B[1], 3C, 3D, 3G	Contingency[2]	Tbl 3A, 3C, 3D, 3G
MW91-5B	Tbl 3A, 3B[1], 3C, 3D	Contingency[2]	Tbl 3A, 3C, 3D
MW91-1	Tbl 3A, 3B[1], 3C, 3D, 3G	Contingency[2]	Tbl 3A, 3C, 3D, 3G
MW92-1A	Tbl 3A, 3B[1], 3C, 3D	Contingency[2]	Tbl 3A, 3C, 3D
MW91-4A	Tbl 3A, 3B[1], 3C, 3D, 3G	Contingency[2]	Tbl 3A, 3C, 3D, 3G
MW91-4B	Tbl 3A, 3B[1], 3C, 3D	Contingency[2]	Tbl 3A, 3C, 3D
MW91-2A	Tbl 3A, 3B[1], 3C, 3D, 3G	Contingency[2]	Tbl 3A, 3C, 3D, 3G
MW94-2B	Tbl 3A, 3B[1], 3C, 3D	Contingency[2]	Tbl 3A, 3C, 3D
SURFACE SAMPLING SITES			
SS-1	Tbl 3B[1], 3C, 3D[3]	Contingency[2]	Tbl 3C & 3D[3]
SS-2	Tbl 3B[1], 3C, 3D[3]	Contingency[2]	Tbl 3C & 3D[3]
SS-3	Tbl 3B[1], 3C, 3D[3]	Contingency[2]	Tbl 3C & 3D[3]

LEACHATE MONITORING				
LOCATION ID	***Monthly May – September (Spray Irrigation Season)***			***Winter***
Treated Leachate	Tbl 3A, 3B, 3C, 3D, 3G			3G
LOCATION ID	***Spring***	***Summer***	***Fall***	***Winter***
Untreated Leachate	Tbl 3A, 3B, 3C, 3D, 3G	Tbl 3A, 3B, 3C, 3D, 3G	Tbl 3A, 3B, 3C, 3D, 3G	Tbl 3A, 3B, 3C, 3D, 3G

LEAK DETECTION SITES				
LOCATION ID	***Spring***	***Summer***	***Fall***	***Winter***
LLDR A	Tbl 3A, 3G	Tbl 3A, 3G	Tbl 3A, 3G	N/A
LLDR B	Tbl 3A, 3G	Tbl 3A, 3G	Tbl 3A, 3G	N/A
LLDR C	Tbl 3A, 3G	Tbl 3A, 3G	Tbl 3A, 3G	N/A
LLDR D	Tbl 3A, 3G	Tbl 3A, 3G	Tbl 3A, 3G	N/A
PLDR B	Tbl 3A, 3G	Tbl 3A, 3G	Tbl 3A, 3G	N/A
PLDR C	Tbl 3A, 3G	Tbl 3A, 3G	Tbl 3A, 3G	N/A
PLDR 1, 4	Tbl 3A, 3G	Tbl 3A, 3G	Tbl 3A, 3G	N/A
PLDR 2, 3	Tbl 3A, 3G	Tbl 3A, 3G	Tbl 3A, 3G	N/A

LLDR: Landfill Leak Detection Riser. PLDR: Pond Leak Detection Riser.

MONITORING SYSTEM ANALYTICAL GUIDE (continued)

LEACHATE SPRAY IRRIGATION AREA WATER QUALITY		
LOCATION	***Suction Lysimeters***	***Monthly (during irrigation season) May - September***
North (Primary) Area	SL 1 - 4	[4]Tbl 3B, 3C, 3D, 3G
South (Back-up) Area[5]	SL 5 - 7	[4]Tbl 3B, 3C, 3D, 3G

LEACHATE SPRAY IRRIGATION AREA	
COMPOSITE SOIL	***Annually (Prior to start of spray irrigation season)***
North Area	Tbl 3F
South Area	Tbl 3F

LANDFILL GAS MONITORING SITES				
LOCATION ID	***Spring***	***Summer***	***Fall***	***Winter***
Drainage Ditch A (@ Station 2+80)	Tbl 3E	Tbl 3E	Tbl 3E	Tbl 3E
Lift Station	Tbl 3E	Tbl 3E	Tbl 3E	Tbl 3E
Lift Station	Tbl 3E	Tbl 3E	Tbl 3E	Tbl 3E
Blower Building	Tbl 3E	Tbl 3E	Tbl 3E	Tbl 3E
GP-1	Tbl 3E	Tbl 3E	Tbl 3E	Tbl 3E
GP-2	Tbl 3E	Tbl 3E	Tbl 3E	Tbl 3E
TP-1	Tbl 3E[5]	Tbl 3E[5]	Tbl 3E[5]	Tbl 3E[5]
TP-2	Tbl 3E[5]	Tbl 3E[5]	Tbl 3E[5]	Tbl 3E[5]

SLOPE STABILITY MONITORING		
LOCATION	**INCLINOMETER ID**	**ANNUALLY**
South Slope	INC-1	Fall Quarter
East Slope	INC-2	Fall Quarter

1 Groundwater analysis of metal parameters (Tbl 3B) will be conducted every two (2) years, beginning with the spring 2000 monitoring event.

2 Summer quarter monitoring will be conducted only for conformation of significant detections during the spring monitoring event.

3 Static water level is not measured.

4 If sample volume from suction lysimeters is inadequate for analysis of all parameters, nitrate + nitrite and ammonia, nitrogen will be analyzed before other parameters.

5 Gas Probes TP-1 and TP-2 are contingency monitoring locations only. See *Landfill Gas Monitoring Contingency Plan.*

ANALYTICAL PARAMETER TABLES

Volatile Organic Compounds

MDH Method 465E List

Metals (Total analysis)

Arsenic
Cadmium
Chromium (Total)
Lead
Mercury
Copper
Magnesium
Iron
Manganese
Zinc

General Chemistry

Alkalinity
Ammonia, Nitrogen
Calcium
Cation/Anion Balance
Chloride
Nitrate + Nitrite
Potassium
Sodium
Sulfate
Total Dissolved Solids (TDS)
Total Suspended Solids (TSS)
Eh

Treated and untreated leachate samples add:
Biochemical Oxygen Demand (BOD)
Chemical Oxygen Demand (COD)
Total Kjeldahl Nitrogen (TKN)
(treated leachate only monitored monthly)

Field Characterizations

Appearance
pH
Dissolved Oxygen
Turbidity
Temperature
Specific Conductance
Static Water Level
Measured Water Volume (Pond Leak Detection Riser Monitoring)

Landfill Gas

Methane (% LEL CH_4)
Oxygen (% O_2)
Carbon Dioxide (% CO_2)
Total Volatile Hydrocarbon
(ppm Benzene Standard)
Barometric Pressure (inches Hg)

Spray Field Composites

Cation Exchange Capacity (Summation)
Total Organic Carbon (Loss on Ignition)
Extractable Phosphorous
Exchangeable Potassium
Saturation Extract Electrical Conductance
pH
Soil Texture
Organic Matter
Soluble Salts
Buffer Index
Calcium
Magnesium
Sodium Absorption Ratio (SAR)

Coal Ash Metals

Boron
Strontium

Volatile Organic Compounds (VOC) Method 8021/MDH 465E

Parameter	Units	MDL	RL	IL[1]	HRL
Allyl Chloride	ug/L	0.4	1.0	7.5	30
Bromobenzene	ug/L	0.2	1.0	--	--
Bromochloromethane	ug/L	0.3	1.0	--	--
Bromodichloromethane	ug/L	0.2	1.0	1.5	6
Bromoform	ug/L	0.3	1.0	10	40
Bromomethane	ug/L	0.3	1.0	2.5	10
Carbon Tetrachloride	ug/L	0.4	1.0	0.75	3
Chlorobenzene	ug/L	0.2	1.0	25	100
Chloroethane	ug/L	0.3	1.0	--	--
Chloroform	ug/L	0.4	1.0	15	60
Chloromethane	ug/L	1.0	3.0	--	--
2-Chlorotoluene	ug/L	0.2	1.0	--	--
4-Chlorotoluene	ug/L	0.2	1.0	--	--
Dibromochloromethane	ug/L	0.3	1.0	2.5	10
1,2-Dibromo-3-chloropro	ug/L	0.5	2.0	0.05	--
1,2-Dibromoethane	ug/L	0.3	1.0	0.001	0.004
Dibromomethane	ug/l	0.2	1.0	--	--
1,2-Dichlorobenzene	ug/L	0.2	1.0	150	600
1,3-Dichlorobenzene	ug/L	0.3	1.0	150	--
1,4-Dichlorobenzene	ug/L	0.2	1.0	2.5	10
Dichlorodifluoromethane	ug/L	0.4	1.0	250	1000
1,1-Dichloroethane	ug/L	0.3	1.0	17.5	70
1,2-Dichloroethane	ug/L	0.1	1.0	1	4
1,1-Dichloroethylene	ug/L	0.4	1.0	1.5	6
Cis-1,2-Dichloroethylene	ug/L	0.2	1.0	17.5	70
Trans-1,2-Dichloroethyle	ug/L	0.3	1.0	25	100
Dichlorofluoromethane	ug/L	0.5	2.0	--	--
1,2-Dichloropropane	ug/L	0.3	1.0	1.25	5
1,3-Dichloropropane	ug/L	0.2	1.0	--	--
2,2-Dichloropropane	ug/L	0.4	1.0	--	--
1,1-Dichloropropene	ug/L	0.3	1.0	--	--
Cis-1,3-Dichloropropene	ug/L	0.2	1.0	0.5	--
Trans-1,3-Dichloropropen	ug/L	0.2	1.0	0.5	2
Hexachlorobutadiene	ug/L	0.4	1.0	0.25	1
Methylene Chloride	ug/L	0.2	1.0	12.5	50
1,1,1,2-Tetrachloroethane	ug/L	0.2	1.0	17.5	70
1,1,2,2-Tetrachloroethane	ug/L	0.4	1.0	0.5	2
1,1,2,2-Tetrachloroethyle	ug/L	0.3	1.0	1.75	7
1,2,3-Trichlorobenzene	ug/L	0.3	1.0	--	--
1,2,4-Trichlorobenzene	ug/L	0.2	1.0	--	--
1,1,1-Trichloroethane	ug/L	0.4	1.0	150	600
1,1,2-Trichloroethane	ug/L	0.3	1.0	0.75	3
1,1,2-Trichloroethylene	ug/L	0.3	1.0	7.5	30
Trichlorofluoromethane	ug/L	0.4	1.0	500	2000
1,2,3-Trichloropropane	ug/L	0.4	1.0	10	40
1,1,2-Trichlorotrifluoroet	ug/L	0.4	1.0	50000	200000

Parameter	Units	MDL	RL	IL[1]	HRL
Vinyl Chloride	ug/L	0.3	1.0	0.05	0.2
Acetone	ug/L	10	30	175	700
Benzene	ug/L	0.2	1.0	2.5	10
n-Butylbenzene	ug/L	0.3	1.0	--	--
sec-Butylbenzene	ug/L	0.3	1.0	--	--
tert-Butylbenzene	ug/L	0.3	1.0	--	--
Isopropylbenzene (Cumene)	ug/L	0.2	1.0	75	300
Ethyl Benzene	ug/L	0.2	1.0	175	700
Ethyl Ether	ug/L	0.4	1.0	250	1000
p-Isopropyltoluene	ug/L	0.3	1.0	--	--
Methyl Ethyl Ketone	ug/L	0.9	3.0	1000	--
Methyl Isobutyl Ketone	ug/L	0.7	2.0	75	--
Methyl tert-butyl ether	ug/L	0.3	1.0	--	--
n-Propylbenzene	ug/L	0.2	1.0	--	--
Naphthalene	ug/L	0.5	2.0	50	300
Styrene	ug/L	0.3	1.0	25	--
Tetrahydrofuran	ug/L	0.5	2.0	25	--
1,2,4-Trimethylbenzene	ug/L	0.3	1.0	--	--
1,3,5-Trimethylbenzene	ug/L	0.2	1.0	--	--
Toluene	ug/L	0.2	1.0	250	1000
m-, p- & o-Xylene	ug/L	0.5	1.5	2500	10000

[1]IL from Limits Table for SLCR-LF Permit SW-405. The IL applies to all monitoring wells except MW91-2B, which is only monitored for static water level after damage no longer allows sample collection.

INORGANIC METHODS

Parameters	Method	Detection Limit
Alkalinity, Total	EPA 310.1	1 mg/L
Antimony	EPA 204.2	0.003 mg/L
Arsenic	EPA 206.2	0.002 mg/L
Barium	EPA 200.7	0.010 mg/L
Beryllium	EPA 210.2	0.0001 mg/L
Boron	EPA 200.7	0.035 mg/L
Cadmium	EPA 213.2	0.0002 mg/L
Calcium	EPA 215.1	0.10 mg/L
Cation/Anion Balance	STD METH 104C	-------
Chloride	EPA 325.1	0.50 mg/L
Chromium	EPA 218.2	0.001 mg/L
Cobalt	EPA 219.2	0.001 mg/L
Conductance, Specific	EPA 120.1	1.0 umhos/cm
Copper	EPA 220.2	0.001 mg/L
Cyanide	EPA 335.2	0.01 mg/L
Eh	ASTMD 1498	0.1 mV
Iron	EPA 236.1	0.03 mg/L
Lead	EPA 239.2	0.001 mg/L
Magnesium	EPA 242.1	0.01 mg/L
Manganese	EPA 243.1	0.01 mg/L
Mercury	EPA 245.1	0.0002 mg/L
Molybdenum	EPA 246.2	0.010 mg/L
Nickel	EPA 249.2	0.002 mg/L
Ammonia, Nitrogen	EPA 350.1	0.01 mg/L
Nitrate, Nitrogen	EPA 353.2	0.01 mg/L
Nitrate + Nitrite, Nitrogen	EPA 353.2	0.01 mg/L
Nitrite, Nitrogen	EPA 353.2	0.01 mg/L
pH	EPA 150.1	0.1 units
Potassium	EPA 258.1	0.10 mg/L
Selenium	EPA 270.2	0.001 mg/L
Silver	EPA 272.2	0.001 mg/L
Sodium	EPA 273.1	0.10 mg/L
Sulfate	EPA 375.4	1.0 mg/L
Thallium	EPA 279.2	0.001 mg/L
Tin	EPA 282.2	0.004 mg/L
Total Dissolved Solids (TDS)	EPA 160.1	1.0 mg/L
Total Suspended Solids (TSS)	EPA 160.2	1.0 mg/L
Vanadium	EPA 286.2	0.004 mg/L
Zinc	EPA 289.1	0.010 mg/L

Parameters in **BOLD** type are the metal analytes monitored at the SLCR-LF.
Parameters in ***ITALIC*** type are the general chemistry analytes monitored at the SLCR-LF.

ANALYTICAL REFERENCE SUMMARY

Methods for Chemical Analysis of Water and Wastes: U.S. Environmental Protection Agency, Cincinnati, OH 1983.

Standard Methods for the Examination of Water and Wastewater, 18th Edition: American Public Health Association, Washington, D.C. 1992.

Annual Book of ASTM Standards, Section II, Water and Environmental Technology: ASTM, Philadelphia, PA 1988.

Test Methods for Evaluating Solid Waste, Physical/Chemical Methods (SW-846), Volumes 11.01-11.02, 3rd Edition: U.S. EPA, July 1992.

Leaking Underground Storage Tank (LUST) Analytical Guide: Wisconsin Department of Natural Resources.

Section III
Soils for Construction

A. INTRODUCTION

The soils and aggregates required for construction and development of the landfill are as follows:

- Native fill - required for embankment, subgrade and berm construction;
- Clay barrier layer - required for composite liner system;
- Drainage layer - required for base drainage and final cover drainage layers;
- Intermediate aggregate - natural filter system between fine particulates in the waste and sand drainage layer and the coarse aggregate in leachate collection system;
- Coarse aggregate - for leachate pipe bedding and leachate collection sump;
- Cover soils - required between the final cover drainage layer and topsoil;
- Topsoil - required for top 6 inches of final cover, berms, embankments, and sedimentation ponds;
- Class 5 aggregate - required for roadway surfaces.

The materials should meet the requirements and be placed according to the technical specifications in Appendix C. The native fill and cover soils are available on-site. The critical soil components listed above are discussed in more detail below.

B. SOIL COMPONENTS

1. Native Fill

Native fill will be utilized for the construction of the necessary embankments, subgrade, and berms. This material will be available from on-site excavations during grading of the base for future phases. Generally soils classified as SC, SM, SP, SW, and CL could be used for this purpose.

Compaction specifications - materials will be placed in accordance with Section 02211 of the Construction Specifications included in Appendix C.

2. Clay Barrier Layer

The clay barrier layer is the soil component of the composite liner system. It is referenced on the facility drawings and in the specifications as the clay barrier layer. The clay barrier layer should consist of soils classified as a CL or CH. It is anticipated that the clay barrier layer material will be obtained from an off-site source.

Clay barrier layer criteria

- Hydraulic conductivity of 1×10^{-7} cm/sec or less;
- Compacted to 95 percent or greater Standard Proctor Dry Density (D-698);
- Atterberg limits

Liquid limit 30 percent or greater
Plasticity Index of 15 percent or greater

- P-200 50 percent or greater;
- Compaction specifications - materials will be placed in accordance with Section 02211 of the Construction Specifications included in Appendix C.

3. Drainage Layer

St. Louis County will use appropriate off-site material for the drainage layer in both the leachate collection and final cover sections. The off-site material must meet the following drainage (design) criteria for use:

- Hydraulic conductivity of 1×10^{-3} cm/sec or greater, no more than 1% passing the 200 sieve.

4. Intermediate Aggregate

Intermediate aggregate is used as a natural filter system between the fine particulates in the waste and sand drainage layer and the coarse aggregate in the leachate collection system.

5. Coarse Aggregate

Coarse aggregate is required at this site for placement in the leachate collection trenches to provide a highly permeable drainage media and a bedding material for the leachate collection pipes. Specifications for the coarse aggregate are:

- Maximum size 1-1/2 inch;
- Minimum size $\geqslant$5/8 inch, $\leqslant$5% passing #4;
- Non-angular to rounded material; and
- Durable.

6. Cover Soils

Cover soils are required between the drainage layer and topsoil of the final cover. These soils must be able to provide a rooting zone for the final cover vegetation. It is anticipated that soils excavated during cell construction can be used for this purpose.

7. Topsoil

Topsoil is required as the top layer of the final cover. This soil must be vegetation supporting.

8. Class 5

Class 5 aggregate is required as a surface stabilizer for the site access road.

Section IV
Design

A. INTRODUCTION

The proposed design for expansion of the landfill foot print and construction of Phases 5 through 8 of the St. Louis County Regional Landfill is intended to meet or exceed the requirements of the Minnesota Solid Waste Rules Part 7035.2815.

The engineering plan sheets developed for this permit re-application include:

1	Cover Sheet
2	Existing Conditions Plan
3	Overall Base Grade Plan
4	Overall Final Cover Plan
5	Gas Collection System Plan
6	Cross Sections
7	Liner System Details
8	Phase 1 and Phase 2 Leachate Collection System Details
9	Phase 4 Leachate Collection System Details
10	Phase 6 Leachate Collection System Details
11	Phase 1 and Phase 2 Leachate Collection System Details
12	Phase 4 Leachate Collection System Details
13	Phase 6 Leachate Collection System Details
14	Closure Details
15	Closure Details
16	Existing Primary Spray Field Configuration
17	Proposed Expansion Secondary Spray Field Configuration
18	Leachate Spray Application Details

B. WASTE FLOWS/SITE CAPACITY/PHASING

The facility is presently permitted for an ultimate disposal capacity of 4,208,670 cubic yards and a permitted capacity of 2,090,470 cubic yards. This will help accommodate an existing disposal rate of approximately 90,000 cubic yards per year.

As shown in Table 1, the proposed design results in a projected site life of approximately 27 years from December 31, 2012 based on current fill rates.

C. SUBBASE PREPARATION

As with previously construction phases, a 5-foot subcut will be completed beneath proposed base grade elevation. The 5-foot subcut includes installation of a reinforcing geotextile and recompaction of the subcut materials to 95 percent Standard Proctor with all rock material over 3/8-inch in diameter being removed. The subcut provides a reinforced mat to protect against movements in the mine spoils.

The construction of future cells will require subbase preparation according to the Technical Specifications and CQA Manual (Appendices C and D, respectively) prior to installation of the liner.

D. BASE GRADES

The base grades have been designed to maximize site life, and minimize environmental impacts. The grades range from about 33 percent on the side slopes (3 horizontal to 1 vertical) to a minimum of 1 percent on the base for the leachate lines.

E. LINER DESIGN

The composite liner will consist of one 60 mil (0.060 inch) high density polyethylene (HDPE) liner, overlying a 2-foot clay liner. The clay liner will have a maximum permeability of $1x10^{-7}$ cm/sec and will be compacted to a minimum of 95 percent standard proctor dry density with a moisture content 0 to 5 percent wet of optimum moisture content. The HELP model calculations, provided in Appendix A, verify that this liner design efficiency of 99.99 percent greatly exceeds the design requirement in the MSW Rules of 98.5 percent.

The HDPE liner will be overlain by 12 inches of granular drainage layer material. The permeability of the drainage layer is specified to be $1x10^{-3}$ cm/sec, or greater. On all side slopes steeper than 10 percent, a textured HDPE membrane will be utilized to improve stability of the geomembrane/clay interface and geomembrane/drainage interface.

The granular drainage layer will collect leachate and provide drainage to the perforated leachate collection pipes. To protect the pipes from damage, and to provide increased flow performance, they will be embedded in coarse aggregate (5/8-inch to 1½ inch). The granular drainage layer also will function as a protective layer to prevent equipment from damaging the HDPE liner. Crushed aggregate will not be used for this reason due to the angulatory of the particles. The puncture resistance of 60-mil HDPE is 60 pounds on a 3/8-inch diameter hemispherical tip (ASTM D-751). The maximum overburden pressure expected is 46 pounds per square inch (psi). The puncture force caused by a 3/8-inch diameter particle (the maximum particle size of the granular drainage layer) is:

P~=~{46~\psi~x~{pi~(3/8~\in.) SUP 2} OVER {4}~=~5.1~pounds}#
\Therefore,~the~design~safety~factor~is~{60 OVER {5.1}}~ APPROX ~12
Puncture potential will increase in the collection pipe trenches because of larger aggregate being used.

P~=~{46~\psi~x~{pi~(1~\in) SUP 2} OVER {4}~=~36~pounds}
Geotextile will be placed in the trenches under the coarse aggregate to increase puncture resistance. For a 1-inch diameter stone, the maximum particle size, the puncture force is:

The minimum design puncture resistance of the geotextile is 125 pounds.
\Therefore,~the~design~safety~factor~for~the~geotextile~is~{125 OVER {36}}~ APPROX ~3.47

Subsequent liner installation will take place at approximately two- to three-year intervals.

F. LEACHATE COLLECTION SYSTEM

The leachate collection system for Phases 1/1A, Phases 2/3, and Phase 4/ future Phase 5 were constructed to collect and convey leachate over the composite liner to single collection sumps located within Phases 1, 2, and 4. The sumps incorporated side-slope risers to eliminate penetration of the liner.

The sideslope riser pump-out system for Phases 1/1A did not perform as originally intended. The County believes that was due in part to the lack of a piping connection between the manhole and the sideslope riser pump. To address this, the County installed an additional pumping system in the Phase 1 manhole to pump leachate directly from the manhole. This second system handles the majority of leachate from Phases 1 and 1A. The manhole system for Phase 2 was re-designed to incorporate a direct connection between the manhole and sideslope riser. The sump system for Phase 4 was designed without a manhole. No further problems are anticipated with any of the sump systems.

Leachate collected in the three sumps is then conveyed to the leachate storage and aerated treatment pond system by a single leachate forcemain. After the ponds, the leachate is pumped to the spray irrigation area for disposal.

It is proposed that the leachate collection system for Phases 6 through 8 be designed to collect, convey, treat, and dispose of leachate in a similar manner. A side slope riser system, leachate lift station, and connection to the existing forcemain will be incorporated to convey leachate through the leachate forcemain to the two existing storage ponds. Trenches for the leachate collection piping, cleanout risers, and lysimeter piping, along with the leachate collection sump area and lysimeter sumps will be excavated during subbase preparation to provide a 2.5-foot clay thickness beneath all areas of the leachate handling system.

1. Collection Pipes

The collection pipes will be six-inch diameter, perforated, Standard Dimension Ratio (SDR)-11, HDPE pipe. Pipe deflection is calculated to be 1.52 percent (the MPCA, MSW Rules require less than 5 percent). The factor of safety for buckling is 6. The factor of safety for wall crushing is 3.6 (See Appendix B for pipe strength calculations).

Locations of collection pipes are shown on Sheet 3 of the Engineering Plans.

Access to the leachate collection pipes will be provided by cleanout risers, which will extend up the side slopes to allow easy access. As with the Phases 2/3 construction, Phases 4/5 construction will provide cleanout risers on the east and west side slopes of the landfill to ensure access from either direction. Cleanout of the collection pipes will be conducted as required in the Operations and Maintenance Plan.

A 6-inch diameter HDPE pipe at 1.0 percent slope has a hydraulic capacity of 273 gallons per minute. The pipe in this design is not sized for flow capacity, but to provide sufficient strength and to allow for use of standard sewer pipe cleaning and maintenance equipment. The peak flow expected in any leachate pipe was calculated using the HELP model leachate generation rates, in the active condition, at 4.1 gallons per minute.

The collection pipes will be placed in trenches. Coarse aggregate will be used as bedding and also mounded over the pipes to protect them from loadings from landfill equipment and the waste mass.

Special care will be taken to properly align the pipes according to the invert elevations and locations. The perforations will be oriented to be on bottom.

The geotextile, as specified in the Technical Specifications, will be placed in the pipe trenches. A layer of coarse aggregate 3 inches thick will be placed in the trench and the pipe will be placed and aligned. The remaining coarse aggregate will be placed after the pipe is fully installed. The granular drainage layer material will then be graded over the trench.

2. Leachate Storage Sump

Leachate collection pipes convey leachate to a storage sump at the base of the landfill. Existing leachate collection sumps exist in Phases 1, 2, and 4. The sump area and manhole serve as a wetwell for the side slope. The sump consists of a 6-foot deep depression in the liner system and will be filled with coarse aggregate. Leachate in the landfill that flows to the sump area will then be pumped to the leachate ponds.

3. Leachate Head Build-Up

Calculation of the average annual leachate head build-up over the sand drainage layer are .27 inches for the part of Phase 1A that is closed, .67 inches for Phases 1 & 1A that are currently open, and .79 inches for Phases 2, 3, and 4. Leachate head will be monitored continuously at the riser in accordance with the operations and maintenance plan.

4. Leachate Sump Manhole

A 4-foot diameter reinforced concrete manhole in located in the leachate storage sumps for Phases 1 and 2 (Phase 4 was designed without a manhole). The manhole provides redundancy for removing leachate if the side slope risers fail, a means of direct measurement of leachate head and a means of calibrating the leachate pressure transducer. The manhole was placed on top of a 1-inch thick sheet of HDPE flatstock to protect the liner. In addition, the lower section of the manhole was perforated to allow leachate to flow in.

5. Side-Slope Risers

In Phase 2, the side-slope riser connects to the manhole in the leachate storage sump. The riser is installed above the 60-mil HDPE liner and up the side-slope to a riser vault. It consists of an 18-inch, SDR-11, HDPE perforated pipe that houses the leachate extraction pump.

6. Leachate Sump Leak Detection

A leak detection system is installed beneath the leachate storage sump in Phases 1, 2, and 4. The leak detection system will consist of horizontal 4-inch perforated SDR 11 pipe connected to 4-inch non-perforated SDR 11 pipe approximately 5 feet inside the secondary liner system. This ensures that no leachate will be transmitted outside the secondary liner system by the leak detection system. Coarse aggregate will be placed around the perforated pipe. The horizontal, non-perforated, leak detection pipes will be connected to vertical 10-inch non-perforated riser pipes that will extend approximately 3 feet above the top of berm. Ten foot of protective CMP casing will be placed at the top of the riser pipe along with a hinged locking cap. See Sheet 8 of the Engineering Plans.

7. Leachate Lift Station and Forcemain

Leachate collected in the sump area will be pumped via a side slope riser system to the riser vault located on top of the east berm. At this point, a connection will be made to the existing 3-inch SDR 11 forcemain, encased in a 6-inch HDPE protective pipe which conveys leachate to the leachate ponds. A manhole will be installed at the connection point along with check valves to allow proper operation of existing and proposed pumps. See the Engineering Plans for more detail.

8. Leachate Storage Ponds

Two leachate storage ponds were constructed with a composite liner system in 1993. Both ponds are aerated and are operated, in series, with leachate treated in the first pad and then flowing into the second pond for additional treatment. Aeration for the treatment process is provided by three 50 HP, 908 LFM blowers, and piping to diffusers in the pond bottoms. The blowers are housed in an adjacent 20-foot by 40-foot building. Piping and manholes at the ponds allow for each of the ponds to be isolated. The ponds were designed to hold approximately 6 million gallons of leachate and have approximately 260 days storage based for peak generation rate estimates.

Effluent from the leachate treatment ponds is pumped to the irrigation site by a 150 gpm, 15 HP, vertical turbine pump, and through a 4-inch diameter SDR 26 PVC forcemain.

9. Leachate Spray Irrigation Area

The original spray irrigation area is approximately 21 acres in size and is shown on Figure No. 1. The spray irrigation area consists of the original 16 fixed head rotary gun-type sprinkler nozzles which distribute the leachate to the soil. The spray irrigation site was originally seeded with a variety of perennial grasses containing smooth brome grass, switch grass, birdfoot trefoil, reed canary, and perennial rye grass. Reed canary has become the dominant grass within the leachate spray radius'. The vegetation is harvested annually in July and September. The harvested grass is baled and applied as frost protection to new landfill cell construction areas.

In the summer of 1999, the leachate management system was upgraded by the addition of a Programmable Logic Controller (PLC), modifications to the existing sprayers and the installation of six additional fixed head rotary gun-type sprinkler nozzles installed around the perimeter of the leachate ponds. Soil water balance sheets were calculated for irrigation control of the spray irrigation areas.

In 1999, St. Louis County also installed six fixed head rotary gun-type sprinkler nozzles on 9 acres north of the current permitted footprint. See Figure No. 1 for the location of this spray irrigation area. The new spray area was designed to provide the landfill with additional, but temporary, leachate spray irrigation capacity. When the landfill footprint expands to include land that was part of the original 1993 permitted footprint, the sprinkler nozzles and lines will be removed to allow for development of future landfill cells. The Department will consider the development of an additional spray irrigation area prior to removal of the existing temporary spray heads.

G. FINAL COVER DESIGN

In the summer of 2000, St. Louis County installed final cover on approximately 3.8 acres of Phases 1A/1. The final cover is designed to contain or divert precipitation over filled areas of the site. Final cover grades at the site are shown on Sheet 4 of the Engineering Drawings. A typical section for the final is shown on Sheets 14 and 15 of the Engineering Drawings. Specifics of the design are discussed in the closure plan.

When necessary, soil is added on top of the waste during final closure to achieve correct grades. The surface of the waste or soil buffer layer is rolled to provide a suitable base for installation of the barrier layer.

The barrier layer consists of a 40-mil LLDPE liner or equal. A drainage layer 9-inches thick with a permeability greater than $1x10^{-3}$ cm/sec overlies the liner. As shown in Appendix A, the average annual total of surface water head over the barrier layer will average approximately 2/3- inch.

The cover soils consist of 9 inches of general fill material and 6 inches of topsoil. The final cover topsoil layer is mulched and seeded with shallow rooted, drought tolerant grasses.

Slopes on the final cover of Phase 1A/1, range from 3 percent on top to 10 percent on the side slopes. Slopes on future closed cells will range from 3 percent on top to 20 percent on the side slopes. The highest elevation will be 1,840 feet. The final contours are presented on Plan Drawing No. 4. Differential settlement will occur, but will be handled as a post-closure item. The new 20 percent cover is more effective, providing increased slopes for settlement while meeting MPCA Solid Waste Rules for maximum slope.

These slopes, along with additional run-off management features, provide the Regional Landfill with environmental protection required by the MPCA Solid Waste Rules.

Run-off leaves the final cover on the surface and through the drainage layer. The transition from the final cover to the perimeter ditch is shown on Plan Drawing No. 5.

Erosion is controlled by limiting the slopes to 20 percent and by strategic placement of drainage swales, collection piping, erosion control mats, and riprap. Run-off is directed by the final cover drainage swales to two primary sedimentation ponds (see Sheet 2 of the Engineering Plans). A minor amount of surface water from the northern slope is proposed to drain to the existing ponding area (secondary sedimentation pond) in the southwest corner of the site.

The drainage swales and underlying collection pipes both outlet at the same location. Surface water control is described in Section H below. No run-on will occur from previously closed areas. Run-off from off-site and undeveloped areas is collected in external perimeter ditches and natural drainage pathways.

Water moving through the drainage layer which is not collected in the drainage swale collection pipes is collected in slotted, 6-inch, corrugated, polyethylene perimeter drainage pipes at the toe of the final cover drainage layer. Plan Drawing No. 12 illustrates the configuration. The perimeter drainage pipes are sloped parallel to the drainage ditches. Outlets are provided every 200 feet to allow the water to move into the internal ditches.

H. SURFACE WATER CONTROL

1. Introduction

The major modification to the final design of the landfill includes a slope change from 10 percent to 20 percent for approximately half of the proposed new footprint. With all the drainage ditches, structures and retention basins previously designed and in place, the following analysis focused on the new potential surface water run-off and corresponding peak discharge rates for the redesign.

2. Run-off Volume and Peak Discharge Rates

Haested's CulvertMaster was utilized to calculate the theoretical surface water run-off and resultant peak discharge rates from four sub-areas within the landfill. The following inputs were used in the model analysis: The SCS Peak Discharge Method was chosen to best represent the existing conditions. A 25 year, 24-hour storm event of 4.3 inches was used in the modeling. A weighted run-off curve number (cn) of 76 was calculated for the existing conditions using the HELP model. This number is generated through the utilization of the slope properties, soil types and vegetation. A time of concentration of 12 minutes was incorporated. Ditch property inputs of the typical ditch design included a slope of 1.0% and a well maintained grassed waterway with a corresponding Mannings Coefficient of 0.030. The input data and the results are contained in the following tables.

The first two sub-areas included a 19.3 acre watershed area that drained to the existing Eastern detention pond. These were broken down into one area that included 8 acres and a larger area that contained 11.3 acres. Two sets of ditches, one on the outside and one on the inside of the perimeter road carry the run-off to the Eastern pond. The smaller sub-area had an estimated discharge of 19.12 cubic feet per second (cfs) and a corresponding ditch velocity of 3.90 feet per second (fps) with a calculated depth of 1.56 feet. The second larger sub-area had a resultant discharge of 27.01 cfs and a maximum ditch velocity of 4.26 fps at a depth of 1.78 feet.

The next area considered drained to the South ponding area. The estimated watershed draining to this area was 16.3 acres. The total discharge from the slopes was 38.96 cfs and the ditch velocity was calculated at 4.66 fps with a depth of 2.04 feet.

The remaining area will be drained to the existing culvert that eventually flows to a naturally occurring pond to the Northwest. The corresponding information includes 6.2 acres of watershed area, a discharge of 14.82 cfs and a ditch velocity of 3.66 fps that included a depth of 1.42 feet.

The model was performed on a worst-case scenario that eliminated the upper swales on the slopes that were used for velocity reduction. The calculated run-off volumes and corresponding peak discharge rates for the redesigned landfill had a total discharge of 100 cfs and a maximum peak velocity of 4.66 fps. The recommended maximum velocity before potential erosion could occur, which is specified within the Handbook of Channel Design for Soil and Water Conservation is 5 fps for grassed waterways. The estimated rates also compare favorably to the rates that were calculated in the last model analysis that was performed in 1996. Therefore, the resultant information illustrates that the design of the in-place drainage ditches, structures and retention ponds are more than adequate to support the proposed changes to the landfill's final design.

3. Sedimentation Pond Design

Two ponds and an existing low area will be used for sedimentation as previously mentioned. The East Pond currently exists. The Northwest Ponding Area also currently exists as a low area below the 1,720 contour in the northwest corner of the site. The South Pond will be constructed when needed and drainage will be rerouted to that area.

The East Pond has substantial volume for detention since there is approximately 8 feet from the pond bottom to the rim elevation of the outlet (1678.2). For a conservative estimate, the routing was conducted assuming the pond had standing water at elevation 1678. Routing showed the peak elevation to be 1679.11 at a peak outflow of 67.9 cfs.

The Northwest Ponding Area is the existing low area below the 1720 elevation and routing shows a peak elevation of 1718.3 for the given event. The South Pond will be 2 feet deep with 1.0 acres of surface area at the berm elevation of 1686. Routing gives a maximum elevation of 1685.6 for the 4.2-inch rainfall.

CULVERT DESIGNER/ANALYZER REPORT
East Pond Sub-Area

Analysis Component			
Storm Event	Design	Discharge	
	19.12 cfs		

Peak Discharge Method	**SCS Peak Discharge**		
Design Rainfall Depth	4.30 in	Check Rainfall Depth	4.30 in
Design Peak Discharge	19.12 cfs	Check Peak Discharge	19.12 cfs
Total Area	8.00 acres	Time of Concentration	12.00 min
Weighed Curve Number	76	Rainfall Type	Type II

Subwatershed	**Area**	**CN**
1	8.00 acres	76

Tailwater properties	**Triangular Channel**
Slope	0.01 ft/ft
Mannings Coefficient	0.030
Depth	1.56 ft
Left Side Slope	2 H:V
Right Side Slope	2 H:V

Tailwater conditions for Design Storm

Discharge	19.12 cfs
Bottom Elevation	3.00 ft
Depth	1.56 ft
Velocity	3.90 ft/s

CULVERT DESIGNER/ANALYZER REPORT
East Pond Sub-Area 2

Analysis Component
Storm Event
Design Discharge 27.01 cfs

Peak Discharge Method	**SCS Peak Discharge**
Design Rainfall Depth	4.30 in
Check Rainfall Depth	4.30 in
Design Peak Discharge	27.01 cfs
Check Peak Discharge	27.01 cfs
Total Area	11.30 acres
Time of Concentration	11.30 min
Weighed Curve Number	76
Rainfall Type	Type II

Subwatershed	**Area**	**CN**
1	11.30 acres	76

Tailwater properties	**Triangular Channel**
Slope	0.01 ft/ft
Mannings Coefficient	0.030
Depth	1.78 ft
Left Side Slope	2 H:V
Right Side Slope	2 H:V

Tailwater conditions for Design Storm

Discharge	27.01 cfs
Bottom Elevation	3.00 ft
Depth	1.78 ft
Velocity	4.26 ft/s

CULVERT DESIGNER/ANALYZER REPORT
South Pond

Analysis Component
Storm Event
Design Discharge 38.96 cfs

Peak Discharge Method	**SCS Peak Discharge**
Design Rainfall Depth	4.30 in
Check Rainfall Depth	4.30 in
Design Peak Discharge	38.96 cfs
Check Peak Discharge	38.96 cfs
Total Area	16.30 acres
Time of Concentration	12.00 min
Weighed Curve Number	76
Rainfall Type	Type II

Subwatershed	**Area**	**CN**
1	16.30 acres	76

Tailwater properties	**Triangular Channel**
Slope	0.01 ft/ft
Mannings Coefficient	0.030
Depth	2.04 ft
Left Side Slope	2 H:V
Right Side Slope	2 H:V

Tailwater conditions for Design Storm

Discharge	38.96 cfs
Bottom Elevation	3.00 ft
Depth	2.04 ft
Velocity	4.66 ft/s

CULVERT DESIGNER/ANALYZER REPORT
Northwest Ponding Area

Analysis Component
Storm Event
Design Discharge 14.82 cfs

Peak Discharge Method	**SCS Peak Discharge**
Design Rainfall Depth	4.30 in
Check Rainfall Depth	4.30 in
Design Peak Discharge	14.82 cfs
Check Peak Discharge	14.82 cfs
Total Area	6.20 acres
Time of Concentration	12.00 min
Weighed Curve Number	76
Rainfall Type	Type II

Subwatershed	**Area**	**CN**
1	6.20 acres	76

Tailwater properties	**Triangular Channel**
Slope	0.01 ft/ft
Mannings Coefficient	0.030
Depth	1.42 ft
Left Side Slope	2 H:V
Right Side Slope	2 H:V

Tailwater conditions for Design Storm

Discharge	14.82 cfs
Bottom Elevation	3.00 ft
Depth	1.42 ft
Velocity	3.66 ft/s

4. Sedimentation Generation Rates

The Revised Universal Soil Loss Equation (RUSLE2 Version July 12 2001) was utilized to provide the following information.

Final closure within various cells in the landfill will take place at intervals throughout the life of the facility. During final closure activities local erosion control measures will be in place until vegetation is established.
Therefore, the soil loss equation was performed on the final design of the landfill with an established vegetative cover. Approximately half of the final design cover has 20% slopes specified and 10% slopes on the remainder. The following calculations are based on this condition.

The following tables provide the input parameters and the results of the soil loss equation that was performed for the landfill. Table 1 shows the results for the portion of the landfill that has 10% slopes. Table 2 contains the results for the final cover with the associated 20% slopes.

The area that includes 10% slopes encompasses approximately 20 acres. Therefore, the estimated soil loss of .078 tons/acre/year equates to an annual total of 1.56 tons lost or .0009 acre-feet.

The remaining 22 acres have designed slopes of 20%. The soil loss for this portion was calculated at .17 tons/acre/year. The resultant sediment load was calculated to be 3.74 tons or .002 acre-feet.

Regional Landfill - No Vegetation - 10% Slope

Parameter	*Unit*	*Result*
Avg. Slope Steepness	*%*	*10.0*
Comp. Seg.		*1*
Comp. Seg. Management	*managements*	*Dense grass, mowed*
Comp. Seg. Soil	*soils\silt loam*	*l-m OM v. slo perm*
Comp. Seg. Steepness	*%*	*10*
Crit. Slope Length	*ft*	*896*
Detachment on slope	*t/ac/yr*	*0.078*
General Yield Level		*Normal*
Horiz. Lengths	*ft*	*896*
Length along Slope	*ft*	*900*
Location	*climates*	*Minnesota\Duluth*
Net C factor		*0.0011*
Net K factor		*0.45*
Net LS factor		*1.5*

Net contour factor		*1.0*
Net ponding factor		*1.0*
Net ridge factor		*0.95*
Net subsurf	*drainage factor*	*fraction NaN*
Residue burial level		*Normal*
Sediment delivery	*t/ac/yr*	*0.0050*
Seg. Sed. Del.	*t/ac/yr*	*0.078*
Segment		*1*
Slope segments	*ft*	*-*
Soil horiz length	*ft*	*896*
Soil loss	*t/ac/yr*	*0.078*
Soil loss	*T*	*0.026*
Soil loss erod. portion	*t/ac/yr*	*0.078*
Soil loss for cons. Plan	*t/ac/yr*	*0.077*
Surf. Coc. Values	*SURF_RES_OUTPUTS*	
Surf. Cover after planting	*%*	*NaN+3*
Topo soil loss	*t/ac/yr*	*0.94*

Regional Landfill -Vegetated - 20% Slope

Parameter	Unit	Result
Avg. Slope Steepness	%	20
Comp. Seg.		1
Comp. Seg. Management	managements	Dense grass, mowed
Comp. Seg. Soil	soils\silt loam	l-m OM,v. slo perm
Comp. Seg. Steepness	%	20
Crit. Slope Length	ft	490
Detachment on slope	t/ac/yr	0.17
General Yield Level		Normal
Horiz. Lengths	ft	490
Length along Slope	ft	500
Location	climates	Minnesota\Duluth
Net C factor		0.0010
Net K factor		0.45
Net LS factor		3.5
Net contour factor		1.00
Net ponding factor		1.00
Net ridge factor		0.99
Net subsurf	drainage factor	NaN
Residue burial level		Normal
Sediment delivery	t/ac/yr	0.011
Seg. Sed. Del.	t/ac/yr	0.17
Segment		1
Slope segments	ft	-
Soil horiz length	ft	
Soil loss	t/ac/yr	0.17
Soil loss	T	0.058
Soil loss erod. portion	t/ac/yr	0.17
Soil loss for cons. Plan	t/ac/yr	0.17

Steepness	%	20
Surf. Coc. Values	SURF_RES_OUTPUTS	
Surf. Cover after planting	%	NaN
Topo soil loss	t/ac/yr	0.17

I. GAS MANAGEMENT AND VENTING

In order to control pressure build-up and associated subsurface mitigation from gas generated in the landfill, vertical gas vents are installed during the placement of the final cover on completed phases of the landfill. Gases generated in landfills through anaerobic processes are composed mainly of carbon dioxide and methane with small amounts of hydrogen sulfide and ammonia. Landfill gas can kill vegetation and accumulate in subsurface voids and low areas thereby enhancing the potential danger of explosion. The final cover system for the landfill consists of very low permeability synthetic material which will contain gases and transport the gas to the vertical vents collection piping beneath the barrier layer.

The depth of the waste (maximum of approximately 138 feet) and the extended time frame in which the wastes were placed along with the granular daily and intermediate cover soils used during operations suggest that the landfill gas generation rate will be low and that vertical gas vents installed in bore holes drilled through the waste should be adequate. It is proposed that fifty-one (51) vertical gas vents be installed at the location shown on Plan Sheet No. 5. The spacing and location of the vents is based on the potential to convert to an active gas collection system.

Discussions are underway with MPCA staff to evaluate gas collection and utilization at the Regional Landfill, most probably as an energy source for the St. Louis County Recycling Facility.

Available information regarding active gas collection systems suggests that the industry standard for the Radious of influence (ROI) for gas collection wells is typically 150 feet. The vertical gas vents provide adequate coverage should an active gas collection system become necessary at the site. The borehole diameter ranges from 30 to 36 inches and the vents are drilled to 10 feet from the bottom depth of waste to protect the integrity of the liner. Monitoring of landfill gas at the site is incorporated into the Post-Closure Monitoring Program. Please refer to the environmental monitoring section of that submittal for details on landfill gas monitoring.

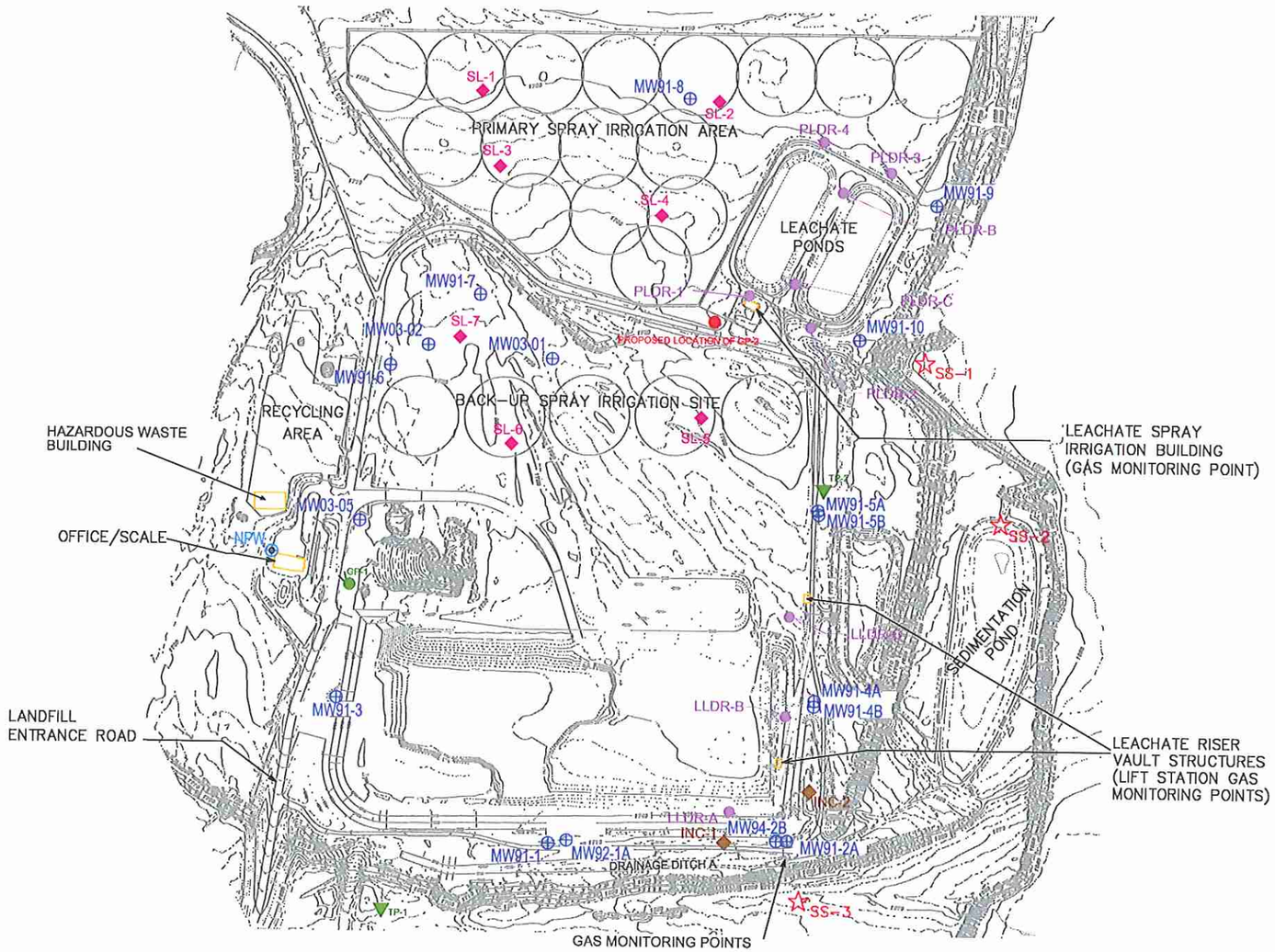

N
W E
S

0' 400' 800'

1" = 400'

LEGEND

- MONITORING WELL
- NON- POTABLE WELL
- SURFACE SITES
- PROPOSED LOCATION OF GP-2
- LLDR LANDFILL LINER LEAK DETECTION RISER
- PLDR LEACHATE POND LEAK DETECTION RISER
- GP TP-1 LANDFILL GAS MONITORING
- IRRIGATION AREA SUCTION LYSIMETERS
- SLOPE STABILITY INCLINOMETERS
- IRRIGATION SPRAY HEADS

NO.	DATE	DESCRIPTION	DRAWN	DATE	CHECK
1	12-27-2012	ORIGINAL ISSUE	SRP	12-27-2012	RC

NTS
526 CHESTNUT STREET
VIRGINIA MINNESOTA 55792
218-741-4290

ST. LOUIS COUNTY LANDFILL
2012 ANNUAL MONITORING REPORT
MINNESOTA

FIGURE - 1
ENVIRONMENTAL MONITORING DETAIL MAP

PROJECT NUMBER: 5062C
DATE: 12-27-2012

P:\08 Consulting Projects\5062C SLCRLF Annual Reporting\2012 SLCRLF Annual\DWG\5062C St Louis Co Landfill 2012 Annual SP.dwg 12/31/2012 12:02:29 PM

Table 1
St. Louis County Regional Landfill Closure Plan
DESIGN VOLUMES

Phase	Open Date	Total Volume[1] (cy)	Final Cover Volume[2] (cy)	Volume for Waste[3] Daily/Inter-mediate cover (cy)	Remaining Capacity[4] (cy)	Remaining Operating Life[5] (yrs)	Final Cover Area (acre)	Liner Area (acre)
Phase 1	1993	Combined with Phase 1A					6.4	Combined w/Phase 1A
Phase 1A	1996	900,000	45,050	854,950	67,159	16	3.8	15.7
Phase 2	2001	223,150	7,700	215,450	60,209	11	1.6	2.7
Phase 3	2002	289,950	11,300	278,650	105,859	13	2.3	2.9
Phase 4	2004	290,720	9,350	281,370	140,799	14	1.9	2.8
Phase 5	2008	386,650	12,830	373,820	373,820	4.2	2.7	2.9
Phase 6	2012	328,057	21,000	307,057	307,057	2.4	4.3	5.0
Phase 7	2016	371,685	13,500	358,185	358,185	7.2	2.8	3.3
Phase 8	2021	583,840	43,320	540,520	540,520	7.2	9.0	3.3
Phase 9	2025	834,618	34,040	800,578	800,578	5.6	7.1	3.3
TOTAL	**1993**	**4,208,670**	**198,100**	**4,010,580**	**2,754,186**	**31**	**41.9**	**41.9**

1. Based from top of sand drainage layer on composite liner system to top of final cover.
2. Based on 3.0 feet of final cover which includes a 12-inch leveling layer over the intermediate cover to provide a suitable base.
3. Based on total volume minus final cover.
4. Phases 1/1A through 5 based on actual fill in place December 31, 2012.
5. Phase 6 through 9 total waste/daily cover volume based on a fill rate of 90,000 cy of waste and cover per year.

Remaining Operating life is 33 years from January 1, 2013, based on the average annual fill rates from 1993 through 2012.

Appendix A

HELP Model Results

Design Report
St. Louis County Regional Landfill

WATER BALANCE SUMMARY

Water balance calculations were performed for the Regional Landfill to estimate the quantity of leachate and surface water runoff generated and the efficiencies of the cover and liner systems. The water balance was calculated using the Hydrologic Evaluation of Landfill Performance (HELP) model, Version 3.07, developed for the United States Environmental Protection Agency (EPA). The HELP model is generally used more as a qualitative model for determining landfill performance efficiencies rather than a quantitative model for actual leachate generation rates and has many limitations for this type of analysis. However it is one of the few models available which is generally accepted as a standard tool for estimating leachate and runoff volumes.

I GENERAL CONDITIONS FOR THE HELP MODEL

The input data for the HELP model such as climatological parameters, soil layer characteristics, liner leakage fractions and other model design criteria required are described in the following sections:

A. Climatological Data

The temperature, solar radiation, and precipitation data used for the water balance is synthetically generated within the model based on climatological patterns for Duluth, Minnesota. The Duluth data was compared to long term averages for Eveleth which is much closer to the Landfill. This comparison yielded figures that were almost identical so the default Duluth data was utilized for the modeling. This data was used for the model simulation for both active and closed conditions.

B. Soil Layer Characteristics

Since leachate will be collected from phases with varied states of cover configurations, unique sets of soil characteristics were utilized. The model was run to illustrate all the effects of the current condition of the landfill. This included the following: a final covered portion, a section with intermediate cover with well established vegetative growth, inactive portions with intermediate cover without any vegetation, a newly constructed cell without any waste and future cells as designed.

The following table provides the specific HELP model criteria that were utilized in the analysis.

C. Final Covered Portion[1]

Layer Description (depth)	Model Layer Type [2]	Model Soil Texture [2]
Topsoil (6")	1	8
Cover soil (9")	1	21
Drainage (9")	2	1
Flexible Membrane (.04")	4	36
Buffer Layer (6")	1	9
Intermediate Cover (12")	1	0 [3]
MSW (600")	1	18
Drainage (12")	2	1
HDPE Liner (0.6")	4	35
Clay Liner (24")	3	16

(1) Drainage layer slope of 2.4% was used.
(2) As used for default soil characteristics within the HELP model.
(3) Soil texture and characteristics were based on average values of several default soil types that reflected on-site cover constituents.

D. Intermediate Cover Near Final Elevation Without Vegetative Growth[1]

Layer Description (depth)	Model Layer Type [2]	Model Soil Texture [2]
Intermediate Cover (12")	1	8
MSW (120")	1	18
Intermediate Cover (12")	1	8
MSW (620")	1	18
Drainage (12")	2	1
Flexible Membrane (.06")	4	35
Clay Liner (24")	3	16

(1) Drainage layer slope of 2.4% was used.
(2) As used for default soil characteristics within the HELP model.

E. Intermediate Cover Without Vegetative Growth[1]

Layer Description (depth)	Model Layer Type [2]	Model Soil Texture [2]
Intermediate Cover (12")	1	8
MSW (540,680,720")	1	18
Drainage (12")	2	1
Flexible Membrane (.06")	4	35
Clay Liner (24")	3	16

(1) Drainage layer slope of 3% was used.
(2) As used for default soil characteristics within the HELP model.

F. Newly Constructed Cell Without Waste [1]

Layer Description (depth)	Model Layer Type [2]	Model Soil Texture [2]
Drainage (12")	2	1
Flexible Membrane (.06")	4	35
Clay Liner (24")	3	16

(1) Drainage layer slope of 3% was used.
(2) As used for default soil characteristics within the HELP model.

G. Liner Leakage Fraction

A synthetic membrane is utilized in the construction of a liner . The liner leakage fraction (LLF) is defined as the fraction of the horizontal area of soil through which percolation is occurring under the leaking synthetic liner.

P.R. Schroeder and R.L. Peyton, originators of the HELP model, have developed guidelines for estimating the liner leakage fraction to be used for model simulation. The guidelines provide assistance in choosing synthetic liner leakage fractions for landfill modeling once a level of liner installation quality is known such as number of holes per acre or the average spacing between holes.

A conservative liner leakage fraction of 0.0001 (0.01%) is assumed for all synthetic liners. The actual leakage should be zero, but a conservative assumption is made. Typically, industry standards for sites with proper QA/QC during construction reflect one to two 1/4 inch holes per acre on synthetic liners. The model provides default data on various installation methods from good to poor. All modeling scenarios utilized the default data associated with good liner placement. This gave an average of 1 to 4 holes that were 1 cm^2 in diameter per acre of liner placed.

H. Other Model Criteria

Other parameters input by the user into the program are vegetative cover, evaporative zone depth, drainage lengths and slopes, runoff fraction, length of time, and area of the facility.

The vegetative cover for the final covered portion was assumed to be good grass. This condition was assumed to be representative of a well seeded cover that has had two years to establish itself. The other model scenarios that were run had no vegetative growth. An evaporative zone depth of 8 inches was used in all four scenarios. This was determined to be a good average for the landfill as a whole because it is a conservative estimate in one situation and rather liberal in others.

The proposed final slopes of the landfill will be set at 10% for a certain portion and 20% for other areas. The different modeling scenarios that required a top slope input utilized 10%. The model input for potential runoff fraction for the final covered portion was set at 100%. Therefore, all the precipitation that doesn't evaporate will runoff the slopes and be carried away from the landfill. The Phase 1 model that was run included intermediate cover without vegetative growth and had a runoff fraction set at 50%. Therefore, about 50% of the precipitation that doesn't evaporate percolates through the waste. This phase is located in the Southeast portion of the landfill and is near final elevation so it does have some potential for run-off. All other scenarios have the potential run-off fraction set at 0% because they are all located in the middle of the landfill footprint and well below final elevations.

The model results were based on a ten (10) year analysis. This time frame was chosen based on a comparison of the two analyses that were modeled over a twenty (20) year period which showed very similar results. The current nature of the landfill, with a large percentage of the total area essentially in a final or semi-final covered state would account for the corresponding outcomes. As a result of this comparison and the ten (10) year time frame between repermitting activities the results that are provided seemed the most useful.

The accumulative area that was analyzed for this model was 32.1 acres. The breakdown is as follows: Phase 1a final covered portion = 3.8, Phase1 and 1a intermediate cover without vegetation = 11.9, Phase 2 intermediate cover without vegetation = 2.7, Phase 3 intermediate cover without vegetation = 2.9, Phase 4 intermediate cover without vegetation = 2.8 and Phase 5 intermediate cover without vegetation = 2.8 acres. Phase 6 newly constructed cell without waste = 5.2 acres. HELP model projections are tracking closely with actual conditions.

II RESULTS

Overall Efficiencies

The overall site efficiency is defined as the total percentage of precipitation that is collected or rejected by the liner system in combination with the cover system. The final covered

portion shows that essentially zero percent of the total precipitation is percolating through the liner system (Percolation through Layer 10). The highest percentage of percolation through the liner system in any of the scenarios is still under a hundredth of a percent. Therefore, the overall site efficiency approaches 100 percent. As can be seen from the HELP model runs attached, the maximum head modeled on the liner system is less than 12 inches in all scenarios.

The following table provides the estimated leachate generation that was predicted by the HELP model. Leachate generation rates for the final covered portion is conservative because the liner leakage fraction used for the cover flexible membrane liner was .02 percent. In reality, a liner leakage fraction closer to zero can be expected. This will reduce the leachate generation rate dramatically.

ANNUAL LEACHATE GENERATION

Model	**Acres**	**Leachate Generated (gallons)**
Final Covered	3.8	12,283
Intermediate Cover near Final Elevation	11.9	1,810,465
Intermediate Cover without Vegetative Cover	11.2	2,733,463
New Construction	5.2	697,956
Total	**32.1**	**5,254,167**

```
******************************************************************
*************

******************************************************************
*************
 **
**
 **
**
 **              HYDROLOGIC EVALUATION OF LANDFILL PERFORMANCE
**
 **                HELP MODEL VERSION 3.07  (1 NOVEMBER 1997)
**
 **                  DEVELOPED BY ENVIRONMENTAL LABORATORY
**
 **                    USAE WATERWAYS EXPERIMENT STATION
**
 **             FOR USEPA RISK REDUCTION ENGINEERING LABORATORY
**
 **
**
 **
**

******************************************************************
*************

******************************************************************
*************


 PRECIPITATION DATA FILE:     c:\download\1aclose.D4
 TEMPERATURE DATA FILE:       c:\download\1aclose.D7
 SOLAR RADIATION DATA FILE:   c:\download\DATA13.D13
 EVAPOTRANSPIRATION DATA:     c:\download\1aclose.D11
 SOIL AND DESIGN DATA FILE:   c:\download\1aclose.D10
 OUTPUT DATA FILE:            c:\download\1aclose.OUT


 TIME:  13:51     DATE:   5/29/2013


******************************************************************
*************
```

TITLE: Regional Landfill 1a Closure

****
****

NOTE: INITIAL MOISTURE CONTENT OF THE LAYERS AND SNOW WATER WERE
COMPUTED AS NEARLY STEADY-STATE VALUES BY THE PROGRAM.

LAYER 1

TYPE 1 - VERTICAL PERCOLATION LAYER
MATERIAL TEXTURE NUMBER 8

THICKNESS	=	6.00	INCHES
POROSITY	=	0.4630	VOL/VOL
FIELD CAPACITY	=	0.2320	VOL/VOL
WILTING POINT	=	0.1160	VOL/VOL
INITIAL SOIL WATER CONTENT	=	0.2244	VOL/VOL
EFFECTIVE SAT. HYD. COND.	=	0.369999994000E-03	CM/SEC

NOTE: SATURATED HYDRAULIC CONDUCTIVITY IS MULTIPLIED BY 4.63
FOR ROOT CHANNELS IN TOP HALF OF EVAPORATIVE ZONE.

LAYER 2

TYPE 1 - VERTICAL PERCOLATION LAYER
MATERIAL TEXTURE NUMBER 21

THICKNESS	=	9.00	INCHES
POROSITY	=	0.3970	VOL/VOL
FIELD CAPACITY	=	0.0320	VOL/VOL
WILTING POINT	=	0.0130	VOL/VOL
INITIAL SOIL WATER CONTENT	=	0.0798	VOL/VOL
EFFECTIVE SAT. HYD. COND.	=	0.300000012000	CM/SEC

LAYER 3

TYPE 2 - LATERAL DRAINAGE LAYER
MATERIAL TEXTURE NUMBER 1

THICKNESS	=	9.00	INCHES
POROSITY	=	0.4170	VOL/VOL
FIELD CAPACITY	=	0.0450	VOL/VOL
WILTING POINT	=	0.0180	VOL/VOL
INITIAL SOIL WATER CONTENT	=	0.0792	VOL/VOL
EFFECTIVE SAT. HYD. COND.	=	0.999999978000E-02	CM/SEC
SLOPE	=	10.00	PERCENT
DRAINAGE LENGTH	=	200.0	FEET

LAYER 4

TYPE 4 - FLEXIBLE MEMBRANE LINER
MATERIAL TEXTURE NUMBER 36

THICKNESS	=	0.04	INCHES
POROSITY	=	0.0000	VOL/VOL
FIELD CAPACITY	=	0.0000	VOL/VOL
WILTING POINT	=	0.0000	VOL/VOL
INITIAL SOIL WATER CONTENT	=	0.0000	VOL/VOL
EFFECTIVE SAT. HYD. COND.	=	0.399999993000E-12	CM/SEC
FML PINHOLE DENSITY	=	1.00	HOLES/ACRE
FML INSTALLATION DEFECTS	=	4.00	HOLES/ACRE
FML PLACEMENT QUALITY	=	3 - GOOD	

LAYER 5

TYPE 1 - VERTICAL PERCOLATION LAYER
MATERIAL TEXTURE NUMBER 9

THICKNESS	=	6.00	INCHES
POROSITY	=	0.5010	VOL/VOL
FIELD CAPACITY	=	0.2840	VOL/VOL
WILTING POINT	=	0.1350	VOL/VOL
INITIAL SOIL WATER CONTENT	=	0.2840	VOL/VOL
EFFECTIVE SAT. HYD. COND.	=	0.190000006000E-03	CM/SEC

LAYER 6

TYPE 1 - VERTICAL PERCOLATION LAYER
MATERIAL TEXTURE NUMBER 6

THICKNESS	=	12.00	INCHES
POROSITY	=	0.4530	VOL/VOL
FIELD CAPACITY	=	0.1900	VOL/VOL
WILTING POINT	=	0.0850	VOL/VOL
INITIAL SOIL WATER CONTENT	=	0.1900	VOL/VOL
EFFECTIVE SAT. HYD. COND.	=	0.720000011000E-03	CM/SEC

LAYER 7

TYPE 1 - VERTICAL PERCOLATION LAYER
MATERIAL TEXTURE NUMBER 18

THICKNESS	=	600.00	INCHES
POROSITY	=	0.6710	VOL/VOL
FIELD CAPACITY	=	0.2920	VOL/VOL
WILTING POINT	=	0.0770	VOL/VOL
INITIAL SOIL WATER CONTENT	=	0.2920	VOL/VOL
EFFECTIVE SAT. HYD. COND.	=	0.100000005000E-02	CM/SEC

LAYER 8

TYPE 2 - LATERAL DRAINAGE LAYER
MATERIAL TEXTURE NUMBER 1

THICKNESS	=	12.00	INCHES
POROSITY	=	0.4170	VOL/VOL
FIELD CAPACITY	=	0.0450	VOL/VOL
WILTING POINT	=	0.0180	VOL/VOL
INITIAL SOIL WATER CONTENT	=	0.0453	VOL/VOL
EFFECTIVE SAT. HYD. COND.	=	0.999999978000E-02	CM/SEC
SLOPE	=	2.40	PERCENT
DRAINAGE LENGTH	=	100.0	FEET

LAYER 9

TYPE 4 - FLEXIBLE MEMBRANE LINER
MATERIAL TEXTURE NUMBER 35

THICKNESS	=	0.06	INCHES
POROSITY	=	0.0000	VOL/VOL
FIELD CAPACITY	=	0.0000	VOL/VOL
WILTING POINT	=	0.0000	VOL/VOL
INITIAL SOIL WATER CONTENT	=	0.0000	VOL/VOL
EFFECTIVE SAT. HYD. COND.	=	0.199999996000E-12	CM/SEC
FML PINHOLE DENSITY	=	1.00	HOLES/ACRE
FML INSTALLATION DEFECTS	=	4.00	HOLES/ACRE
FML PLACEMENT QUALITY	=	3 - GOOD	

LAYER 10

TYPE 3 - BARRIER SOIL LINER
MATERIAL TEXTURE NUMBER 16

THICKNESS	=	24.00	INCHES
POROSITY	=	0.4270	VOL/VOL
FIELD CAPACITY	=	0.4180	VOL/VOL
WILTING POINT	=	0.3670	VOL/VOL
INITIAL SOIL WATER CONTENT	=	0.4270	VOL/VOL
EFFECTIVE SAT. HYD. COND.	=	0.100000001000E-06	CM/SEC

GENERAL DESIGN AND EVAPORATIVE ZONE DATA

NOTE: SCS RUNOFF CURVE NUMBER WAS COMPUTED FROM DEFAULT SOIL DATA BASE USING SOIL TEXTURE # 8 WITH A GOOD STAND OF GRASS, A SURFACE SLOPE OF 10.% AND A SLOPE LENGTH OF 200. FEET.

SCS RUNOFF CURVE NUMBER	=	74.20	
FRACTION OF AREA ALLOWING RUNOFF	=	100.0	PERCENT
AREA PROJECTED ON HORIZONTAL PLANE	=	3.800	ACRES
EVAPORATIVE ZONE DEPTH	=	24.0	INCHES
INITIAL WATER IN EVAPORATIVE ZONE	=	2.777	INCHES
UPPER LIMIT OF EVAPORATIVE STORAGE	=	10.104	INCHES
LOWER LIMIT OF EVAPORATIVE STORAGE	=	0.975	INCHES
INITIAL SNOW WATER	=	0.998	INCHES

INITIAL WATER IN LAYER MATERIALS = 192.753 INCHES
TOTAL INITIAL WATER = 193.750 INCHES
TOTAL SUBSURFACE INFLOW = 0.00
INCHES/YEAR

EVAPOTRANSPIRATION AND WEATHER DATA

NOTE: EVAPOTRANSPIRATION DATA WAS OBTAINED FROM
DULUTH MINNESOTA

STATION LATITUDE = 46.50
DEGREES
MAXIMUM LEAF AREA INDEX = 3.50
START OF GROWING SEASON (JULIAN DATE) = 144
END OF GROWING SEASON (JULIAN DATE) = 261
EVAPORATIVE ZONE DEPTH = 24.0
INCHES
AVERAGE ANNUAL WIND SPEED = 11.20 MPH
AVERAGE 1ST QUARTER RELATIVE HUMIDITY = 70.00 %
AVERAGE 2ND QUARTER RELATIVE HUMIDITY = 66.00 %
AVERAGE 3RD QUARTER RELATIVE HUMIDITY = 74.00 %
AVERAGE 4TH QUARTER RELATIVE HUMIDITY = 74.00 %

NOTE: PRECIPITATION DATA WAS SYNTHETICALLY GENERATED
USING
COEFFICIENTS FOR DULUTH
MINNESOTA

NORMAL MEAN MONTHLY PRECIPITATION (INCHES)

JAN/JUL	FEB/AUG	MAR/SEP	APR/OCT	MAY/NOV	JUN/DEC
1.20	0.90	1.78	2.16	3.15	3.96
3.96	4.12	3.26	2.21	1.69	1.29

NOTE: TEMPERATURE DATA WAS SYNTHETICALLY GENERATED
USING
COEFFICIENTS FOR DULUTH
MINNESOTA

NORMAL MEAN MONTHLY TEMPERATURE (DEGREES FAHRENHEIT)

JAN/JUL	FEB/AUG	MAR/SEP	APR/OCT	MAY/NOV	JUN/DEC
6.30	12.00	22.90	38.30	50.30	59.40
65.30	63.20	54.00	44.20	28.20	13.80

NOTE: SOLAR RADIATION DATA WAS SYNTHETICALLY GENERATED USING COEFFICIENTS FOR DULUTH MINNESOTA AND STATION LATITUDE = 46.50 DEGREES

****

MONTHLY TOTALS (IN INCHES) FOR YEAR 1

	JAN/JUL	FEB/AUG	MAR/SEP	APR/OCT	MAY/NOV	JUN/DEC
PRECIPITATION	0.51	0.83	1.24	1.02	1.64	3.93
	3.41	3.48	2.98	0.90	2.99	0.77
RUNOFF	0.000	0.000	0.957	0.153	0.063	0.000
	0.000	0.000	0.000	0.000	0.000	0.000
EVAPOTRANSPIRATION	0.510	0.500	0.436	0.201	2.003	4.343
	2.364	4.636	2.027	1.075	0.869	0.478

```
 LATERAL DRAINAGE COLLECTED        0.0090  0.0006  0.0001  0.0000
2.1832  0.3235
   FROM LAYER  3                   0.0000  0.0201  0.0783  0.2870
0.0478  0.0588

 PERCOLATION/LEAKAGE THROUGH       0.0007  0.0001  0.0000  0.0000
0.0478  0.0108
   LAYER  4                        0.0000  0.0010  0.0027  0.0102
0.0026  0.0030

 LATERAL DRAINAGE COLLECTED        0.0025  0.0009  0.0004  0.0001
0.0120  0.0291
   FROM LAYER  8                   0.0119  0.0043  0.0018  0.0069
0.0054  0.0038

 PERCOLATION/LEAKAGE THROUGH       0.0000  0.0000  0.0000  0.0000
0.0000  0.0000
   LAYER 10                        0.0000  0.0000  0.0000  0.0000
0.0000  0.0000


 ---------------------------------------------------------------------
---------------
                    MONTHLY SUMMARIES FOR DAILY HEADS (INCHES)
 ---------------------------------------------------------------------
---------------


 AVERAGE DAILY HEAD ON             0.010   0.001   0.000   0.000
2.509   0.384
   TOP OF LAYER  4                 0.000   0.023   0.093   0.330
0.057   0.068

 STD. DEVIATION OF DAILY           0.007   0.001   0.000   0.000
2.041   0.233
   HEAD ON TOP OF LAYER  4         0.000   0.043   0.169   0.147
0.019   0.033

 AVERAGE DAILY HEAD ON             0.006   0.002   0.001   0.000
0.028   0.071
   TOP OF LAYER  9                 0.028   0.010   0.004   0.016
0.013   0.009

 STD. DEVIATION OF DAILY           0.001   0.001   0.000   0.000
0.028   0.014
   HEAD ON TOP OF LAYER  9         0.009   0.002   0.001   0.003
0.002   0.000


*********************************************************************
**************
```

```
*****************************************************************
**************

                          ANNUAL TOTALS FOR YEAR    1
 ---------------------------------------------------------------
---------------
                                          INCHES          CU.
FEET     PERCENT
                                         --------
----------    -------
   PRECIPITATION                          23.70
326917.844    100.00

   RUNOFF                                  1.173
16178.780      4.95

   EVAPOTRANSPIRATION                     19.441
268173.531     82.03

   DRAINAGE COLLECTED FROM LAYER  3        3.0083
41496.887     12.69

   PERC./LEAKAGE THROUGH LAYER  4          0.078838
1087.490      0.33

   AVG. HEAD ON TOP OF LAYER  4            0.2896

   DRAINAGE COLLECTED FROM LAYER  8        0.0791
1091.790      0.33

   PERC./LEAKAGE THROUGH LAYER 10          0.000024
0.336      0.00

   AVG. HEAD ON TOP OF LAYER  9            0.0159

   CHANGE IN WATER STORAGE                -0.002           -
23.574     -0.01

   SOIL WATER AT START OF YEAR           194.457
2682335.000

   SOIL WATER AT END OF YEAR             194.455
2682311.500

   SNOW WATER AT START OF YEAR             0.998
13760.033      4.21

   SNOW WATER AT END OF YEAR               0.998
```

13760.033 4.21

ANNUAL WATER BUDGET BALANCE 0.0000
0.095 0.00

****
****

****
****

MONTHLY TOTALS (IN INCHES) FOR YEAR 2

	JAN/JUL	FEB/AUG	MAR/SEP	APR/OCT	MAY/NOV	JUN/DEC
PRECIPITATION	0.65	0.95	1.83	5.02	4.48	5.12
	3.67	1.18	4.03	1.03	0.50	2.51
RUNOFF	0.000	0.000	1.244	1.660	0.000	0.000
	0.015	0.000	0.000	0.000	0.000	0.000
EVAPOTRANSPIRATION	0.386	0.428	0.462	0.920	3.865	3.962
	4.748	0.822	2.996	1.754	0.716	0.321
LATERAL DRAINAGE COLLECTED	0.0081	0.0006	0.0000	2.2930	2.7626	1.3361
FROM LAYER 3	0.3000	0.0000	0.0000	0.0107	0.0249	0.0158
PERCOLATION/LEAKAGE THROUGH	0.0007	0.0001	0.0000	0.0229	0.0608	0.0332
LAYER 4	0.0093	0.0000	0.0000	0.0006	0.0016	0.0011

```
 LATERAL DRAINAGE COLLECTED        0.0023  0.0008  0.0003  0.0001
0.0209  0.0496
   FROM LAYER  8                   0.0357  0.0137  0.0043  0.0016
0.0013  0.0015

 PERCOLATION/LEAKAGE THROUGH       0.0000  0.0000  0.0000  0.0000
0.0000  0.0000
   LAYER 10                        0.0000  0.0000  0.0000  0.0000
0.0000  0.0000


 ---------------------------------------------------------------
---------------
                    MONTHLY SUMMARIES FOR DAILY HEADS (INCHES)
 ---------------------------------------------------------------
---------------


 AVERAGE DAILY HEAD ON             0.009   0.001   0.000   1.405
3.175   1.587
   TOP OF LAYER  4                 0.345   0.000   0.000   0.012
0.030   0.018

 STD. DEVIATION OF DAILY           0.007   0.001   0.000   2.872
1.168   0.787
   HEAD ON TOP OF LAYER  4         0.361   0.000   0.000   0.018
0.014   0.013

 AVERAGE DAILY HEAD ON             0.005   0.002   0.001   0.000
0.050   0.122
   TOP OF LAYER  9                 0.085   0.032   0.011   0.004
0.003   0.004

 STD. DEVIATION OF DAILY           0.001   0.001   0.000   0.000
0.032   0.012
   HEAD ON TOP OF LAYER  9         0.019   0.011   0.003   0.001
0.000   0.000


*****************************************************************
**************


*****************************************************************
**************

                          ANNUAL TOTALS FOR YEAR    2
 ---------------------------------------------------------------
---------------
                                          INCHES          CU.
```

```
FEET      PERCENT
                                                  --------
----------    -------
   PRECIPITATION                                   30.97
427200.219    100.00

   RUNOFF                                           2.920
40277.102       9.43

   EVAPOTRANSPIRATION                              21.380
294914.781      69.03

   DRAINAGE COLLECTED FROM LAYER  3                 6.7518
93134.016      21.80

   PERC./LEAKAGE THROUGH LAYER  4                   0.130333
1797.820       0.42

   AVG. HEAD ON TOP OF LAYER  4                     0.5485

   DRAINAGE COLLECTED FROM LAYER  8                 0.1322
1822.965       0.43

   PERC./LEAKAGE THROUGH LAYER 10                   0.000037
0.505       0.00

   AVG. HEAD ON TOP OF LAYER  9                     0.0265

   CHANGE IN WATER STORAGE                         -0.214          -
2949.152      -0.69

   SOIL WATER AT START OF YEAR                    194.455
2682311.500

   SOIL WATER AT END OF YEAR                      193.456
2668527.250

   SNOW WATER AT START OF YEAR                      0.998
13760.033       3.22

   SNOW WATER AT END OF YEAR                        1.783
24594.988       5.76

   ANNUAL WATER BUDGET BALANCE                      0.0000
0.004       0.00

*****************************************************************
**************
```

```
*****************************************************************
**************

                    MONTHLY TOTALS (IN INCHES) FOR YEAR    3
 ---------------------------------------------------------------
---------------

                                        JAN/JUL  FEB/AUG  MAR/SEP  APR/OCT
MAY/NOV  JUN/DEC
                                        -------  -------  -------  -------
-------  -------

 PRECIPITATION                           1.30     0.56     0.82     0.74
6.23     9.47
                                         5.20     2.18     2.92     1.15
1.01     1.18

 RUNOFF                                  0.000    0.000    0.000    0.884
0.000    0.260
                                         0.000    0.000    0.000    0.000
0.000    0.000

 EVAPOTRANSPIRATION                      0.485    0.571    0.670    0.430
4.810    5.317
                                         6.313    2.392    2.429    1.404
0.683    0.358

 LATERAL DRAINAGE COLLECTED              0.0012   0.0001   0.0000   0.0000
2.4612   1.3980
   FROM LAYER  3                         2.7898   0.0383   0.0000   0.0000
0.0000   0.0000

 PERCOLATION/LEAKAGE THROUGH             0.0002   0.0000   0.0000   0.0000
0.0546   0.0338
   LAYER  4                              0.0597   0.0013   0.0000   0.0000
0.0000   0.0000

 LATERAL DRAINAGE COLLECTED              0.0008   0.0003   0.0001   0.0000
0.0153   0.0362
   FROM LAYER  8                         0.0369   0.0413   0.0133   0.0045
0.0014   0.0005

 PERCOLATION/LEAKAGE THROUGH             0.0000   0.0000   0.0000   0.0000
0.0000   0.0000
   LAYER 10                              0.0000   0.0000   0.0000   0.0000
0.0000   0.0000
```

```
 ------------------------------------------------------------------
---------------
                    MONTHLY SUMMARIES FOR DAILY HEADS (INCHES)
 ------------------------------------------------------------------
---------------


 AVERAGE DAILY HEAD ON              0.001   0.000   0.000   0.000
2.829   1.660
   TOP OF LAYER  4                  3.207   0.044   0.000   0.000
0.000   0.000

 STD. DEVIATION OF DAILY            0.001   0.000   0.000   0.000
1.354   1.552
   HEAD ON TOP OF LAYER  4          2.488   0.132   0.000   0.000
0.000   0.000

 AVERAGE DAILY HEAD ON              0.002   0.001   0.000   0.000
0.036   0.089
   TOP OF LAYER  9                  0.088   0.098   0.033   0.011
0.003   0.001

 STD. DEVIATION OF DAILY            0.000   0.000   0.000   0.000
0.028   0.008
   HEAD ON TOP OF LAYER  9          0.025   0.029   0.010   0.004
0.001   0.000


*******************************************************************
**************


*******************************************************************
**************

                           ANNUAL TOTALS FOR YEAR    3
 ------------------------------------------------------------------
---------------
                                          INCHES          CU.
FEET     PERCENT
                                         --------
----------    -------
   PRECIPITATION                          32.76
451891.531    100.00

   RUNOFF                                  1.144
15782.711      3.49

   EVAPOTRANSPIRATION                     25.862
356739.437     78.94
```

```
   DRAINAGE COLLECTED FROM LAYER  3          6.6887
92263.328      20.42

   PERC./LEAKAGE THROUGH LAYER  4            0.149722
2065.266       0.46

   AVG. HEAD ON TOP OF LAYER  4              0.6451

   DRAINAGE COLLECTED FROM LAYER  8          0.1505
2075.480       0.46

   PERC./LEAKAGE THROUGH LAYER 10            0.000041
0.565       0.00

   AVG. HEAD ON TOP OF LAYER  9              0.0301

   CHANGE IN WATER STORAGE                  -1.085        -
14969.993      -3.31

   SOIL WATER AT START OF YEAR             193.456
2668527.250

   SOIL WATER AT END OF YEAR               193.331
2666813.000

   SNOW WATER AT START OF YEAR               1.783
24594.988       5.44

   SNOW WATER AT END OF YEAR                 0.822
11339.352       2.51

   ANNUAL WATER BUDGET BALANCE               0.0000          -
0.014       0.00


*****************************************************************
**************


*****************************************************************
**************

                    MONTHLY TOTALS (IN INCHES) FOR YEAR    4
 ---------------------------------------------------------------
---------------
```

	JAN/JUL	FEB/AUG	MAR/SEP	APR/OCT	MAY/NOV	JUN/DEC
PRECIPITATION	1.30	0.82	1.74	1.50	3.81	3.92
	1.36	4.38	2.44	0.90	0.60	2.09
RUNOFF	0.000	0.000	0.018	1.937	0.184	0.000
	0.000	0.000	0.000	0.000	0.000	0.000
EVAPOTRANSPIRATION	0.286	0.605	0.395	0.128	3.450	3.475
	2.233	4.280	1.944	0.981	0.596	0.397
LATERAL DRAINAGE COLLECTED	0.0000	0.0000	0.0000	0.0000	2.6550	0.5039
FROM LAYER 3	0.0027	0.0010	0.0000	0.0105	0.0198	0.0056
PERCOLATION/LEAKAGE THROUGH	0.0000	0.0000	0.0000	0.0000	0.0553	0.0147
LAYER 4	0.0001	0.0001	0.0000	0.0008	0.0013	0.0005
LATERAL DRAINAGE COLLECTED	0.0002	0.0000	0.0000	0.0000	0.0066	0.0375
FROM LAYER 8	0.0177	0.0057	0.0018	0.0009	0.0011	0.0010
PERCOLATION/LEAKAGE THROUGH	0.0000	0.0000	0.0000	0.0000	0.0000	0.0000
LAYER 10	0.0000	0.0000	0.0000	0.0000	0.0000	0.0000

MONTHLY SUMMARIES FOR DAILY HEADS (INCHES)

AVERAGE DAILY HEAD ON	0.000	0.000	0.000	0.000	3.043	0.599
TOP OF LAYER 4	0.003	0.001	0.000	0.012	0.024	0.006

```
 STD. DEVIATION OF DAILY          0.000   0.000   0.000   0.000
2.443   0.480
   HEAD ON TOP OF LAYER  4        0.013   0.005   0.000   0.005
0.009   0.004

 AVERAGE DAILY HEAD ON            0.000   0.000   0.000   0.000
0.016   0.092
   TOP OF LAYER  9                0.042   0.013   0.004   0.002
0.003   0.002

 STD. DEVIATION OF DAILY          0.000   0.000   0.000   0.000
0.020   0.014
   HEAD ON TOP OF LAYER  9        0.014   0.004   0.001   0.000
0.000   0.000


*****************************************************************
**************


*****************************************************************
**************

                          ANNUAL TOTALS FOR YEAR    4
 ---------------------------------------------------------------
---------------
                                          INCHES          CU.
FEET     PERCENT
                                         --------
----------    -------
   PRECIPITATION                          24.86
342919.000    100.00

   RUNOFF                                  2.138
29493.562      8.60

   EVAPOTRANSPIRATION                     18.769
258899.312     75.50

   DRAINAGE COLLECTED FROM LAYER  3        3.1986
44121.750     12.87

   PERC./LEAKAGE THROUGH LAYER  4          0.072853
1004.931      0.29

   AVG. HEAD ON TOP OF LAYER  4            0.3074

   DRAINAGE COLLECTED FROM LAYER  8        0.0725
999.644      0.29
```

```
   PERC./LEAKAGE THROUGH LAYER 10            0.000022
0.300       0.00

   AVG. HEAD ON TOP OF LAYER  9              0.0146

   CHANGE IN WATER STORAGE                   0.682
9404.449       2.74

   SOIL WATER AT START OF YEAR             193.331
2666813.000

   SOIL WATER AT END OF YEAR               193.042
2662822.750

   SNOW WATER AT START OF YEAR               0.822
11339.352       3.31

   SNOW WATER AT END OF YEAR                 1.793
24734.076       7.21

   ANNUAL WATER BUDGET BALANCE               0.0000            -
0.011       0.00

*****************************************************************
**************

*****************************************************************
**************

                    MONTHLY TOTALS (IN INCHES) FOR YEAR    5
 ---------------------------------------------------------------
---------------

                                  JAN/JUL FEB/AUG MAR/SEP APR/OCT
MAY/NOV JUN/DEC
                                  ------- ------- ------- -------
------- -------

 PRECIPITATION                     1.17    1.36    1.38    2.26
2.94    4.38
                                   4.36    4.15    2.62    0.85
2.04    1.60

 RUNOFF                            0.000   0.000   2.307   0.677
```

```
0.599   0.000
                                    0.000   0.009   0.000   0.000
0.010   0.097

 EVAPOTRANSPIRATION                 0.322   0.358   0.538   0.459
2.497   3.929
                                    4.919   3.704   1.973   1.292
0.372   0.369

 LATERAL DRAINAGE COLLECTED         0.0004  0.0000  0.0000  0.0000
2.2906  0.8972
   FROM LAYER  3                    0.1597  0.3043  0.0000  0.0193
0.0265  0.0026

 PERCOLATION/LEAKAGE THROUGH        0.0001  0.0000  0.0000  0.0000
0.0431  0.0244
   LAYER  4                         0.0048  0.0087  0.0000  0.0011
0.0016  0.0003

 LATERAL DRAINAGE COLLECTED         0.0004  0.0001  0.0001  0.0000
0.0024  0.0336
   FROM LAYER  8                    0.0245  0.0125  0.0054  0.0021
0.0019  0.0011

 PERCOLATION/LEAKAGE THROUGH        0.0000  0.0000  0.0000  0.0000
0.0000  0.0000
   LAYER 10                         0.0000  0.0000  0.0000  0.0000
0.0000  0.0000


 ------------------------------------------------------------------
---------------
                    MONTHLY SUMMARIES FOR DAILY HEADS (INCHES)
 ------------------------------------------------------------------
---------------


 AVERAGE DAILY HEAD ON              0.000   0.000   0.000   0.000
2.413   1.066
   TOP OF LAYER  4                  0.184   0.350   0.000   0.022
0.031   0.003

 STD. DEVIATION OF DAILY            0.000   0.000   0.000   0.000
2.671   0.499
   HEAD ON TOP OF LAYER  4          0.348   0.463   0.000   0.022
0.017   0.002

 AVERAGE DAILY HEAD ON              0.001   0.000   0.000   0.000
0.006   0.082
   TOP OF LAYER  9                  0.058   0.030   0.013   0.005
0.005   0.003
```

```
 STD. DEVIATION OF DAILY          0.000   0.000   0.000   0.000
0.010   0.020
   HEAD ON TOP OF LAYER  9        0.017   0.004   0.004   0.001
0.000   0.001

*****************************************************************
**************


*****************************************************************
**************

                           ANNUAL TOTALS FOR YEAR    5
 ---------------------------------------------------------------
---------------
                                          INCHES          CU.
FEET     PERCENT
                                         --------
----------    -------
   PRECIPITATION                          29.11
401543.344    100.00

   RUNOFF                                  3.699
51025.410     12.71

   EVAPOTRANSPIRATION                     20.733
285985.344     71.22

   DRAINAGE COLLECTED FROM LAYER  3        3.7006
51045.691     12.71

   PERC./LEAKAGE THROUGH LAYER  4          0.084124
1160.406      0.29

   AVG. HEAD ON TOP OF LAYER  4            0.3391

   DRAINAGE COLLECTED FROM LAYER  8        0.0841
1160.070      0.29

   PERC./LEAKAGE THROUGH LAYER 10          0.000025
0.344      0.00

   AVG. HEAD ON TOP OF LAYER  9            0.0169

   CHANGE IN WATER STORAGE                 0.894
12326.486      3.07

   SOIL WATER AT START OF YEAR            193.042
2662822.750
```

```
   SOIL WATER AT END OF YEAR                194.978
2689530.250

   SNOW WATER AT START OF YEAR                1.793
24734.076      6.16

   SNOW WATER AT END OF YEAR                  0.751
10352.999      2.58

   ANNUAL WATER BUDGET BALANCE                0.0000
0.000      0.00

*****************************************************************
**************
```

```
*****************************************************************
**************

                    MONTHLY TOTALS (IN INCHES) FOR YEAR    6
 ---------------------------------------------------------------
---------------

                                   JAN/JUL FEB/AUG MAR/SEP APR/OCT
MAY/NOV JUN/DEC
                                   ------- ------- ------- -------
------- -------

 PRECIPITATION                      0.80    1.02    2.30    2.75
3.91    1.39
                                    4.52    3.27    3.87    1.54
3.17    1.03

 RUNOFF                             0.000   0.000   1.731   1.409
0.304   0.000
                                    0.000   0.000   0.000   0.000
0.000   0.000

 EVAPOTRANSPIRATION                 0.383   0.500   0.492   0.243
3.757   1.889
                                    3.806   3.093   2.808   1.177
0.999   0.510

 LATERAL DRAINAGE COLLECTED         0.0002  0.0000  0.0000  0.0000
3.9775  0.3639
```

```
   FROM LAYER  3                    0.0008  0.0312  0.5648  0.3091
1.3311  0.3778

 PERCOLATION/LEAKAGE THROUGH        0.0000  0.0000  0.0000  0.0000
0.0567  0.0111
   LAYER  4                         0.0000  0.0012  0.0163  0.0108
0.0332  0.0123

 LATERAL DRAINAGE COLLECTED         0.0004  0.0001  0.0001  0.0000
0.0088  0.0365
   FROM LAYER  8                    0.0153  0.0057  0.0073  0.0129
0.0198  0.0218

 PERCOLATION/LEAKAGE THROUGH        0.0000  0.0000  0.0000  0.0000
0.0000  0.0000
   LAYER 10                         0.0000  0.0000  0.0000  0.0000
0.0000  0.0000


 ---------------------------------------------------------------
---------------
                    MONTHLY SUMMARIES FOR DAILY HEADS (INCHES)
 ---------------------------------------------------------------
---------------


 AVERAGE DAILY HEAD ON              0.000   0.000   0.000   0.000
3.093   0.432
   TOP OF LAYER  4                  0.001   0.036   0.671   0.355
1.581   0.434

 STD. DEVIATION OF DAILY            0.000   0.000   0.000   0.000
2.480   0.414
   HEAD ON TOP OF LAYER  4          0.005   0.105   0.395   0.121
0.664   0.291

 AVERAGE DAILY HEAD ON              0.001   0.000   0.000   0.000
0.021   0.090
   TOP OF LAYER  9                  0.036   0.013   0.018   0.031
0.048   0.052

 STD. DEVIATION OF DAILY            0.000   0.000   0.000   0.000
0.025   0.015
   HEAD ON TOP OF LAYER  9          0.012   0.004   0.010   0.002
0.013   0.008


*****************************************************************
**************
```

```
*****************************************************************
**************

                          ANNUAL TOTALS FOR YEAR     6
 ---------------------------------------------------------------
---------------
                                          INCHES          CU.
FEET     PERCENT
                                         --------
----------    -------
   PRECIPITATION                          29.57
407888.687    100.00

   RUNOFF                                  3.443
47487.375     11.64

   EVAPOTRANSPIRATION                     19.655
271125.375     66.47

   DRAINAGE COLLECTED FROM LAYER  3        6.9564
95956.086     23.53

   PERC./LEAKAGE THROUGH LAYER  4          0.141738
1955.128      0.48

   AVG. HEAD ON TOP OF LAYER  4            0.5503

   DRAINAGE COLLECTED FROM LAYER  8        0.1286
1774.585      0.44

   PERC./LEAKAGE THROUGH LAYER 10          0.000036
0.503      0.00

   AVG. HEAD ON TOP OF LAYER  9            0.0259

   CHANGE IN WATER STORAGE                -0.613          -
8455.385     -2.07

   SOIL WATER AT START OF YEAR           194.978
2689530.250

   SOIL WATER AT END OF YEAR             194.150
2678107.500

   SNOW WATER AT START OF YEAR             0.751
10352.999      2.54

   SNOW WATER AT END OF YEAR               0.966
13320.350      3.27

   ANNUAL WATER BUDGET BALANCE             0.0000
```

0.147 0.00

****
****

****
****

MONTHLY TOTALS (IN INCHES) FOR YEAR 7

	JAN/JUL	FEB/AUG	MAR/SEP	APR/OCT	MAY/NOV	JUN/DEC
PRECIPITATION	0.70	0.54	1.87	2.47	4.50	6.03
	5.57	2.56	2.03	3.90	1.25	0.79
RUNOFF	0.000	0.020	0.628	0.815	0.308	0.000
	0.014	0.000	0.000	0.000	0.083	0.000
EVAPOTRANSPIRATION	0.388	0.353	0.513	0.478	4.015	4.947
	5.461	2.611	1.119	1.382	0.388	0.390
LATERAL DRAINAGE COLLECTED	0.0324	0.0025	0.0002	0.0000	3.9976	0.5724
FROM LAYER 3	1.3568	0.0000	0.0000	1.5962	0.4874	0.0459
PERCOLATION/LEAKAGE THROUGH	0.0019	0.0003	0.0000	0.0000	0.0612	0.0171
LAYER 4	0.0296	0.0000	0.0000	0.0368	0.0149	0.0024
LATERAL DRAINAGE COLLECTED	0.0102	0.0035	0.0014	0.0005	0.0093	0.0403
FROM LAYER 8	0.0312	0.0186	0.0058	0.0124		

```
0.0254  0.0126

 PERCOLATION/LEAKAGE THROUGH      0.0000  0.0000  0.0000  0.0000
0.0000  0.0000
   LAYER 10                       0.0000  0.0000  0.0000  0.0000
0.0000  0.0000


 ---------------------------------------------------------------
---------------
                    MONTHLY SUMMARIES FOR DAILY HEADS (INCHES)
 ---------------------------------------------------------------
---------------


 AVERAGE DAILY HEAD ON            0.037   0.003   0.000   0.000
3.347   0.680
   TOP OF LAYER  4                1.560   0.000   0.000   1.835
0.579   0.053

 STD. DEVIATION OF DAILY          0.026   0.002   0.000   0.000
2.354   0.338
   HEAD ON TOP OF LAYER  4        2.183   0.000   0.000   1.255
0.377   0.037

 AVERAGE DAILY HEAD ON            0.024   0.009   0.003   0.001
0.022   0.099
   TOP OF LAYER  9                0.074   0.044   0.014   0.029
0.062   0.030

 STD. DEVIATION OF DAILY          0.007   0.003   0.001   0.000
0.025   0.013
   HEAD ON TOP OF LAYER  9        0.012   0.015   0.005   0.021
0.009   0.008


*****************************************************************
**************



*****************************************************************
**************

                           ANNUAL TOTALS FOR YEAR    7
 ---------------------------------------------------------------
---------------
                                          INCHES          CU.
FEET     PERCENT
                                         --------
----------    -------
```

```
   PRECIPITATION                                32.21
444304.812    100.00

   RUNOFF                                        1.868
25768.785      5.80

   EVAPOTRANSPIRATION                           22.045
304093.500     68.44

   DRAINAGE COLLECTED FROM LAYER  3             8.0914
111612.953     25.12

   PERC./LEAKAGE THROUGH LAYER  4               0.164254
2265.723      0.51

   AVG. HEAD ON TOP OF LAYER  4                 0.6745

   DRAINAGE COLLECTED FROM LAYER  8             0.1712
2362.022      0.53

   PERC./LEAKAGE THROUGH LAYER 10               0.000047
0.653      0.00

   AVG. HEAD ON TOP OF LAYER  9                 0.0344

   CHANGE IN WATER STORAGE                      0.034
466.963      0.11

   SOIL WATER AT START OF YEAR                 194.150
2678107.500

   SOIL WATER AT END OF YEAR                   194.815
2687280.250

   SNOW WATER AT START OF YEAR                  0.966
13320.350      3.00

   SNOW WATER AT END OF YEAR                    0.335
4614.606      1.04

   ANNUAL WATER BUDGET BALANCE                  0.0000          -
0.042      0.00

*****************************************************************
**************
```

```
*****************************************************************
**************

                    MONTHLY TOTALS (IN INCHES) FOR YEAR    8
 ---------------------------------------------------------------
---------------

                                    JAN/JUL FEB/AUG MAR/SEP APR/OCT
MAY/NOV JUN/DEC
                                    ------- ------- ------- -------
------- -------

 PRECIPITATION                       0.84    0.33    2.47    1.25
2.67    4.55
                                     4.53    4.01    2.82    1.78
0.85    1.35

 RUNOFF                              0.000   0.000   1.004   0.338
0.000   0.000
                                     0.000   0.000   0.000   0.000
0.000   0.000

 EVAPOTRANSPIRATION                  0.632   0.674   0.467   0.078
2.941   5.189
                                     3.556   4.433   2.190   1.597
0.559   0.336

 LATERAL DRAINAGE COLLECTED          0.0036  0.0002  0.0000  0.0000
2.8745  0.3067
   FROM LAYER  3                     0.0000  0.1156  0.0000  0.2542
0.1723  0.0515

 PERCOLATION/LEAKAGE THROUGH         0.0004  0.0000  0.0000  0.0000
0.0559  0.0104
   LAYER  4                          0.0000  0.0040  0.0000  0.0086
0.0069  0.0027

 LATERAL DRAINAGE COLLECTED          0.0047  0.0015  0.0006  0.0002
0.0156  0.0319
   FROM LAYER  8                     0.0128  0.0058  0.0028  0.0035
0.0073  0.0054

 PERCOLATION/LEAKAGE THROUGH         0.0000  0.0000  0.0000  0.0000
0.0000  0.0000
   LAYER 10                          0.0000  0.0000  0.0000  0.0000
0.0000  0.0000


 ---------------------------------------------------------------
---------------
                    MONTHLY SUMMARIES FOR DAILY HEADS (INCHES)
```

```
 ------------------------------------------------------------------
---------------


 AVERAGE DAILY HEAD ON              0.004   0.000   0.000   0.000
2.952   0.364
   TOP OF LAYER  4                  0.000   0.133   0.000   0.292
0.205   0.059

 STD. DEVIATION OF DAILY            0.003   0.000   0.000   0.000
2.063   0.211
   HEAD ON TOP OF LAYER  4          0.000   0.198   0.000   0.221
0.079   0.041

 AVERAGE DAILY HEAD ON              0.011   0.004   0.001   0.000
0.037   0.078
   TOP OF LAYER  9                  0.030   0.014   0.007   0.008
0.018   0.013

 STD. DEVIATION OF DAILY            0.003   0.001   0.000   0.000
0.032   0.016
   HEAD ON TOP OF LAYER  9          0.010   0.002   0.002   0.005
0.001   0.002


*****************************************************************
**************


*****************************************************************
**************

                          ANNUAL TOTALS FOR YEAR     8
 ------------------------------------------------------------------
---------------
                                          INCHES          CU.
FEET     PERCENT
                                         --------
----------    -------
   PRECIPITATION                           27.45
378645.312    100.00

   RUNOFF                                   1.342
18507.113      4.89

   EVAPOTRANSPIRATION                      22.652
312462.969     82.52

   DRAINAGE COLLECTED FROM LAYER  3         3.7787
52122.941     13.77
```

```
   PERC./LEAKAGE THROUGH LAYER  4            0.088782
1224.659      0.32

   AVG. HEAD ON TOP OF LAYER  4              0.3341

   DRAINAGE COLLECTED FROM LAYER  8          0.0921
1270.353      0.34

   PERC./LEAKAGE THROUGH LAYER 10            0.000028
0.382      0.00

   AVG. HEAD ON TOP OF LAYER  9              0.0185

   CHANGE IN WATER STORAGE                  -0.415          -
5718.618     -1.51

   SOIL WATER AT START OF YEAR             194.815
2687280.250

   SOIL WATER AT END OF YEAR               193.721
2672185.250

   SNOW WATER AT START OF YEAR               0.335
4614.606      1.22

   SNOW WATER AT END OF YEAR                 1.014
13990.963      3.70

   ANNUAL WATER BUDGET BALANCE               0.0000
0.181      0.00

*****************************************************************
**************

*****************************************************************
**************

                    MONTHLY TOTALS (IN INCHES) FOR YEAR    9
 ---------------------------------------------------------------
---------------

                                   JAN/JUL FEB/AUG MAR/SEP APR/OCT
MAY/NOV JUN/DEC
                                   ------- ------- ------- -------
```

```
------- -------

 PRECIPITATION                      2.37    0.35    2.02    2.08
3.03    3.57
                                    2.57    2.42    3.75    1.03
2.53    2.17

 RUNOFF                             0.000   0.000   1.016   1.407
0.000   0.000
                                    0.000   0.000   0.000   0.000
0.000   0.000

 EVAPOTRANSPIRATION                 0.413   0.392   0.426   0.285
3.261   3.286
                                    3.020   1.757   2.559   1.903
0.729   0.375

 LATERAL DRAINAGE COLLECTED         0.0041  0.0003  0.0000  1.2183
2.7175  0.4282
   FROM LAYER  3                    0.1172  0.0000  0.0000  0.3261
0.4218  0.3115

 PERCOLATION/LEAKAGE THROUGH        0.0004  0.0000  0.0000  0.0040
0.0591  0.0133
   LAYER  4                         0.0038  0.0000  0.0000  0.0112
0.0131  0.0106

 LATERAL DRAINAGE COLLECTED         0.0024  0.0008  0.0003  0.0001
0.0171  0.0354
   FROM LAYER  8                    0.0187  0.0062  0.0019  0.0051
0.0085  0.0132

 PERCOLATION/LEAKAGE THROUGH        0.0000  0.0000  0.0000  0.0000
0.0000  0.0000
   LAYER 10                         0.0000  0.0000  0.0000  0.0000
0.0000  0.0000


 ------------------------------------------------------------------
---------------
                    MONTHLY SUMMARIES FOR DAILY HEADS (INCHES)
 ------------------------------------------------------------------
---------------


 AVERAGE DAILY HEAD ON              0.005   0.000   0.000   0.255
3.123   0.509
   TOP OF LAYER  4                  0.135   0.000   0.000   0.375
0.501   0.358

 STD. DEVIATION OF DAILY            0.003   0.000   0.000   1.396
2.089   0.355
```

```
   HEAD ON TOP OF LAYER  4          0.253   0.000   0.000   0.131
0.378   0.240

 AVERAGE DAILY HEAD ON              0.006   0.002   0.001   0.000
0.041   0.087
   TOP OF LAYER  9                  0.044   0.015   0.005   0.012
0.021   0.031

 STD. DEVIATION OF DAILY            0.002   0.001   0.000   0.000
0.034   0.018
   HEAD ON TOP OF LAYER  9          0.013   0.005   0.002   0.006
0.004   0.003


*****************************************************************
**************


*****************************************************************
**************

                          ANNUAL TOTALS FOR YEAR    9
 ---------------------------------------------------------------
---------------
                                          INCHES          CU.
FEET     PERCENT
                                         --------
----------    -------
   PRECIPITATION                          27.89
384714.719    100.00

   RUNOFF                                  2.423
33424.527      8.69

   EVAPOTRANSPIRATION                     18.404
253868.562     65.99

   DRAINAGE COLLECTED FROM LAYER  3        5.5450
76487.305     19.88

   PERC./LEAKAGE THROUGH LAYER  4          0.115623
1594.903      0.41

   AVG. HEAD ON TOP OF LAYER  4            0.4384

   DRAINAGE COLLECTED FROM LAYER  8        0.1098
1514.152      0.39

   PERC./LEAKAGE THROUGH LAYER 10          0.000032
0.440      0.00
```

```
   AVG. HEAD ON TOP OF LAYER  9                0.0220

   CHANGE IN WATER STORAGE                     1.408
19419.748      5.05

   SOIL WATER AT START OF YEAR               193.721
2672185.250

   SOIL WATER AT END OF YEAR                 194.093
2677314.750

   SNOW WATER AT START OF YEAR                 1.014
13990.963      3.64

   SNOW WATER AT END OF YEAR                   2.050
28281.109      7.35

   ANNUAL WATER BUDGET BALANCE                 0.0000
0.003      0.00


*****************************************************************
**************


*****************************************************************
**************

                    MONTHLY TOTALS (IN INCHES) FOR YEAR   10
 ---------------------------------------------------------------
---------------

                                   JAN/JUL FEB/AUG MAR/SEP APR/OCT
MAY/NOV JUN/DEC
                                   ------- ------- ------- -------
------- -------

 PRECIPITATION                      1.23    0.49    2.43    2.43
1.99    2.97
                                    1.98    6.68    3.82    2.35
1.16    1.17

 RUNOFF                             0.000   0.034   1.089   1.901
0.277   0.000
                                    0.000   0.000   0.000   0.000
0.004   0.000
```

```
 EVAPOTRANSPIRATION                 0.354   0.465   0.601   0.336
2.367   3.472
                                    1.931   3.866   2.889   1.639
0.501   0.324

 LATERAL DRAINAGE COLLECTED         0.0266  0.0020  0.0002  0.0000
3.6622  0.3663
   FROM LAYER  3                    0.0000  0.6050  1.4726  1.5749
0.3537  0.0354

 PERCOLATION/LEAKAGE THROUGH        0.0016  0.0002  0.0000  0.0000
0.0515  0.0114
   LAYER  4                         0.0000  0.0150  0.0363  0.0382
0.0117  0.0020

 LATERAL DRAINAGE COLLECTED         0.0070  0.0025  0.0010  0.0003
0.0077  0.0341
   FROM LAYER  8                    0.0144  0.0076  0.0247  0.0325
0.0265  0.0123

 PERCOLATION/LEAKAGE THROUGH        0.0000  0.0000  0.0000  0.0000
0.0000  0.0000
   LAYER 10                         0.0000  0.0000  0.0000  0.0000
0.0000  0.0000


 ------------------------------------------------------------------
---------------
                    MONTHLY SUMMARIES FOR DAILY HEADS (INCHES)
 ------------------------------------------------------------------
---------------


 AVERAGE DAILY HEAD ON              0.031   0.003   0.000   0.000
2.803   0.435
   TOP OF LAYER  4                  0.000   0.695   1.749   1.810
0.420   0.041

 STD. DEVIATION OF DAILY            0.021   0.002   0.000   0.000
2.532   0.395
   HEAD ON TOP OF LAYER  4          0.000   0.894   0.690   0.946
0.243   0.028

 AVERAGE DAILY HEAD ON              0.017   0.007   0.002   0.001
0.018   0.084
   TOP OF LAYER  9                  0.034   0.018   0.061   0.077
0.065   0.029

 STD. DEVIATION OF DAILY            0.004   0.002   0.001   0.000
0.023   0.014
   HEAD ON TOP OF LAYER  9          0.011   0.008   0.012   0.010
```

0.012 0.008

****
****

****
****

ANNUAL TOTALS FOR YEAR 10

	INCHES	CU. FEET	PERCENT
PRECIPITATION	28.70	395887.844	100.00
RUNOFF	3.304	45575.527	11.51
EVAPOTRANSPIRATION	18.745	258574.984	65.32
DRAINAGE COLLECTED FROM LAYER 3	8.0989	111715.812	28.22
PERC./LEAKAGE THROUGH LAYER 4	0.167930	2316.423	0.59
AVG. HEAD ON TOP OF LAYER 4	0.6656		
DRAINAGE COLLECTED FROM LAYER 8	0.1707	2354.004	0.59
PERC./LEAKAGE THROUGH LAYER 10	0.000047	0.651	0.00
AVG. HEAD ON TOP OF LAYER 9	0.0344		
CHANGE IN WATER STORAGE	-1.619	22333.164	-5.64
SOIL WATER AT START OF YEAR	194.093	2677314.750	
SOIL WATER AT END OF YEAR	193.678	2671594.750	

```
   SNOW WATER AT START OF YEAR                2.050
28281.109      7.14

   SNOW WATER AT END OF YEAR                  0.846
11667.942      2.95

   ANNUAL WATER BUDGET BALANCE                0.0000
0.043      0.00

*****************************************************************
**************


*****************************************************************
**************

          AVERAGE MONTHLY VALUES IN INCHES FOR YEARS    1 THROUGH
10
 ---------------------------------------------------------------
---------------

                           JAN/JUL  FEB/AUG  MAR/SEP  APR/OCT
MAY/NOV  JUN/DEC
                           -------  -------  -------  -------
-------  -------
   PRECIPITATION
   -------------
     TOTALS                  1.09     0.72     1.81     2.15
3.52     4.53
                             3.72     3.43     3.13     1.54
1.61     1.47

     STD. DEVIATIONS         0.54     0.33     0.54     1.22
1.36     2.13
                             1.39     1.52     0.69     0.96
0.99     0.61

   RUNOFF
   ------
     TOTALS                  0.000    0.005    0.999    1.118
0.173    0.026
                             0.003    0.001    0.000    0.000
0.010    0.010

     STD. DEVIATIONS         0.000    0.012    0.700    0.635
```

```
0.200     0.082
                                0.006     0.003     0.000     0.000
0.026     0.031

   EVAPOTRANSPIRATION
   ------------------
     TOTALS                     0.416     0.485     0.500     0.356
3.297     3.981
                                3.835     3.159     2.293     1.420
0.641     0.386

     STD. DEVIATIONS            0.101     0.107     0.084     0.241
0.861     1.037
                                1.486     1.255     0.566     0.301
0.200     0.063

   LATERAL DRAINAGE COLLECTED FROM LAYER  3
   ----------------------------------------
     TOTALS                     0.0086    0.0006    0.0001    0.3511
2.9582    0.6496
                                0.4727    0.1115    0.2116    0.4388
0.2885    0.0905

     STD. DEVIATIONS            0.0116    0.0009    0.0001    0.7824
0.6752    0.4156
                                0.9140    0.1973    0.4768    0.6193
0.4101    0.1365

   PERCOLATION/LEAKAGE THROUGH LAYER  4
   ------------------------------------
     TOTALS                     0.0006    0.0001    0.0000    0.0027
0.0546    0.0180
                                0.0107    0.0031    0.0055    0.0118
0.0087    0.0035

     STD. DEVIATIONS            0.0007    0.0001    0.0000    0.0072
0.0057    0.0092
                                0.0195    0.0050    0.0119    0.0143
0.0102    0.0043

   LATERAL DRAINAGE COLLECTED FROM LAYER  8
   ----------------------------------------
     TOTALS                     0.0031    0.0011    0.0004    0.0001
0.0116    0.0364
                                0.0219    0.0121    0.0069    0.0082
0.0099    0.0073

     STD. DEVIATIONS            0.0033    0.0011    0.0005    0.0001
0.0056    0.0056
                                0.0095    0.0112    0.0072    0.0095
0.0102    0.0073
```

```
   PERCOLATION/LEAKAGE THROUGH LAYER 10
   ------------------------------------
     TOTALS                  0.0000   0.0000   0.0000   0.0000
0.0000   0.0000
                             0.0000   0.0000   0.0000   0.0000
0.0000   0.0000

     STD. DEVIATIONS         0.0000   0.0000   0.0000   0.0000
0.0000   0.0000
                             0.0000   0.0000   0.0000   0.0000
0.0000   0.0000


 ------------------------------------------------------------------
---------------
                AVERAGES OF MONTHLY AVERAGED DAILY HEADS (INCHES)
 ------------------------------------------------------------------
---------------


   DAILY AVERAGE HEAD ON TOP OF LAYER  4
   -------------------------------------
     AVERAGES                0.0098   0.0008   0.0001   0.1660
2.9290   0.7716
                             0.5434   0.1283   0.2513   0.5043
0.3427   0.1040

     STD. DEVIATIONS         0.0133   0.0011   0.0001   0.4426
0.2948   0.4936
                             1.0506   0.2268   0.5663   0.7118
0.4871   0.1569

   DAILY AVERAGE HEAD ON TOP OF LAYER  9
   -------------------------------------
     AVERAGES                0.0073   0.0028   0.0010   0.0003
0.0274   0.0892
                             0.0520   0.0288   0.0170   0.0195
0.0242   0.0173

     STD. DEVIATIONS         0.0078   0.0030   0.0011   0.0004
0.0133   0.0136
                             0.0226   0.0266   0.0175   0.0225
0.0249   0.0172


*******************************************************************
**************


*******************************************************************
```

```
**************

      AVERAGE ANNUAL TOTALS & (STD. DEVIATIONS) FOR YEARS    1
THROUGH   10
 ---------------------------------------------------------------------
---------------
                                          INCHES            CU. FEET
PERCENT
                                     -------------------
-------------   ---------
  PRECIPITATION                     28.72    (   2.922)     396191.3
100.00

  RUNOFF                             2.345   (  0.9654)
32352.09      8.166

  EVAPOTRANSPIRATION                20.769   (  2.3137)
286483.78     72.309

  LATERAL DRAINAGE COLLECTED         5.58182 (  2.00586)
76995.680   19.43396
    FROM LAYER  3

  PERCOLATION/LEAKAGE THROUGH        0.11942 (  0.03638)
1647.275     0.41578
    LAYER  4

  AVERAGE HEAD ON TOP                0.479 (    0.156)
    OF LAYER  4

  LATERAL DRAINAGE COLLECTED         0.11907 (  0.03717)
1642.506    0.41457
    FROM LAYER  8

  PERCOLATION/LEAKAGE THROUGH        0.00003 (  0.00001)
0.468     0.00012
    LAYER 10

  AVERAGE HEAD ON TOP                0.024 (    0.007)
    OF LAYER  9

  CHANGE IN WATER STORAGE           -0.093   (  0.9161)      -
1283.22     -0.324


*****************************************************************
**************
```

```
*****************************************************************
*************

                PEAK DAILY VALUES FOR YEARS    1 THROUGH   10
    ------------------------------------------------------------
-----------
                                                (INCHES)
(CU. FT.)
                                               ----------
-------------
       PRECIPITATION                             3.44
47451.359

       RUNOFF                                    1.333
18388.3164

       DRAINAGE COLLECTED FROM LAYER  3          1.51129
20846.76560

       PERCOLATION/LEAKAGE THROUGH LAYER  4      0.004202
57.95561

       AVERAGE HEAD ON TOP OF LAYER  4           8.022

       MAXIMUM HEAD ON TOP OF LAYER  4          67.993

       LOCATION OF MAXIMUM HEAD IN LAYER  3
             (DISTANCE FROM DRAIN)              64.8 FEET

       DRAINAGE COLLECTED FROM LAYER  8          0.00194
26.70389

       PERCOLATION/LEAKAGE THROUGH LAYER 10      0.000000
0.00651

       AVERAGE HEAD ON TOP OF LAYER  9           0.142

       MAXIMUM HEAD ON TOP OF LAYER  9           0.274

       LOCATION OF MAXIMUM HEAD IN LAYER  8
             (DISTANCE FROM DRAIN)               3.6 FEET

       SNOW WATER                                4.52
62307.3242


       MAXIMUM VEG. SOIL WATER (VOL/VOL)                    0.2728

       MINIMUM VEG. SOIL WATER (VOL/VOL)                    0.0406
```

*** Maximum heads are computed using McEnroe's equations. ***

Reference: Maximum Saturated Depth over Landfill Liner
by Bruce M. McEnroe, University of Kansas
ASCE Journal of Environmental Engineering
Vol. 119, No. 2, March 1993, pp. 262-270.

****

****
****

FINAL WATER STORAGE AT END OF YEAR 10

LAYER	(INCHES)	(VOL/VOL)
1	1.4163	0.2360
2	0.2494	0.0277
3	0.3301	0.0367
4	0.0000	0.0000
5	1.7040	0.2840
6	2.2800	0.1900
7	175.2000	0.2920
8	0.5463	0.0455
9	0.0000	0.0000
10	10.2480	0.4270
SNOW WATER	0.846	

****
****

****
****

```
******************************************************************
*************

******************************************************************
*************
 **
**
 **
**
 **                HYDROLOGIC EVALUATION OF LANDFILL PERFORMANCE
**
 **                  HELP MODEL VERSION 3.07  (1 NOVEMBER 1997)
**
 **                    DEVELOPED BY ENVIRONMENTAL LABORATORY
**
 **                      USAE WATERWAYS EXPERIMENT STATION
**
 **               FOR USEPA RISK REDUCTION ENGINEERING LABORATORY
**
 **
**
 **
**

******************************************************************
*************

******************************************************************
*************


 PRECIPITATION DATA FILE:     c:\download\Phase1.D4
 TEMPERATURE DATA FILE:       c:\download\Phase1.D7
 SOLAR RADIATION DATA FILE:   c:\download\Phase1.D13
 EVAPOTRANSPIRATION DATA:     c:\download\Phase1.D11
 SOIL AND DESIGN DATA FILE:   c:\download\Phase1.D10
 OUTPUT DATA FILE:            c:\download\Phase1.OUT


 TIME:  14:44     DATE:   5/29/2013


******************************************************************
*************
```

TITLE: Regional Landfill Phase1

****
****

NOTE: INITIAL MOISTURE CONTENT OF THE LAYERS AND SNOW WATER WERE
COMPUTED AS NEARLY STEADY-STATE VALUES BY THE PROGRAM.

LAYER 1

TYPE 1 - VERTICAL PERCOLATION LAYER
MATERIAL TEXTURE NUMBER 8

THICKNESS	=	12.00	INCHES
POROSITY	=	0.4630	VOL/VOL
FIELD CAPACITY	=	0.2320	VOL/VOL
WILTING POINT	=	0.1160	VOL/VOL
INITIAL SOIL WATER CONTENT	=	0.2740	VOL/VOL
EFFECTIVE SAT. HYD. COND.	=	0.369999994000E-03	CM/SEC

NOTE: SATURATED HYDRAULIC CONDUCTIVITY IS MULTIPLIED BY 1.34
FOR ROOT CHANNELS IN TOP HALF OF EVAPORATIVE ZONE.

LAYER 2

TYPE 1 - VERTICAL PERCOLATION LAYER
MATERIAL TEXTURE NUMBER 18

THICKNESS	=	120.00	INCHES
POROSITY	=	0.6710	VOL/VOL
FIELD CAPACITY	=	0.2920	VOL/VOL
WILTING POINT	=	0.0770	VOL/VOL
INITIAL SOIL WATER CONTENT	=	0.2920	VOL/VOL
EFFECTIVE SAT. HYD. COND.	=	0.100000005000E-02	CM/SEC

LAYER 3

```
                                   --------

                    TYPE 1 - VERTICAL PERCOLATION LAYER
                        MATERIAL TEXTURE NUMBER   8
THICKNESS                        =     12.00   INCHES
POROSITY                         =      0.4630 VOL/VOL
FIELD CAPACITY                   =      0.2320 VOL/VOL
WILTING POINT                    =      0.1160 VOL/VOL
INITIAL SOIL WATER CONTENT       =      0.2320 VOL/VOL
EFFECTIVE SAT. HYD. COND.        =  0.369999994000E-03
CM/SEC


                                 LAYER  4
                                 --------

                    TYPE 1 - VERTICAL PERCOLATION LAYER
                        MATERIAL TEXTURE NUMBER  18
THICKNESS                        =    620.00   INCHES
POROSITY                         =      0.6710 VOL/VOL
FIELD CAPACITY                   =      0.2920 VOL/VOL
WILTING POINT                    =      0.0770 VOL/VOL
INITIAL SOIL WATER CONTENT       =      0.2920 VOL/VOL
EFFECTIVE SAT. HYD. COND.        =  0.100000005000E-02
CM/SEC


                                 LAYER  5
                                 --------

                      TYPE 2 - LATERAL DRAINAGE LAYER
                        MATERIAL TEXTURE NUMBER   1
THICKNESS                        =     12.00   INCHES
POROSITY                         =      0.4170 VOL/VOL
FIELD CAPACITY                   =      0.0450 VOL/VOL
WILTING POINT                    =      0.0180 VOL/VOL
INITIAL SOIL WATER CONTENT       =      0.0480 VOL/VOL
EFFECTIVE SAT. HYD. COND.        =  0.999999978000E-02
CM/SEC
SLOPE                            =      2.40   PERCENT
DRAINAGE LENGTH                  =    100.0    FEET


                                 LAYER  6
                                 --------
```

TYPE 4 - FLEXIBLE MEMBRANE LINER
MATERIAL TEXTURE NUMBER 0

THICKNESS	=	0.06	INCHES
POROSITY	=	0.0000	VOL/VOL
FIELD CAPACITY	=	0.0000	VOL/VOL
WILTING POINT	=	0.0000	VOL/VOL
INITIAL SOIL WATER CONTENT	=	0.0000	VOL/VOL
EFFECTIVE SAT. HYD. COND.	=	0.000000000000E+00	CM/SEC
FML PINHOLE DENSITY	=	1.00	HOLES/ACRE
FML INSTALLATION DEFECTS	=	4.00	HOLES/ACRE
FML PLACEMENT QUALITY	=	3 - GOOD	

LAYER 7

TYPE 3 - BARRIER SOIL LINER
MATERIAL TEXTURE NUMBER 16

THICKNESS	=	24.00	INCHES
POROSITY	=	0.4270	VOL/VOL
FIELD CAPACITY	=	0.4180	VOL/VOL
WILTING POINT	=	0.3670	VOL/VOL
INITIAL SOIL WATER CONTENT	=	0.4270	VOL/VOL
EFFECTIVE SAT. HYD. COND.	=	0.100000001000E-06	CM/SEC

GENERAL DESIGN AND EVAPORATIVE ZONE DATA

NOTE: SCS RUNOFF CURVE NUMBER WAS COMPUTED FROM DEFAULT SOIL DATA BASE USING SOIL TEXTURE # 8 WITH A POOR STAND OF GRASS, A SURFACE SLOPE OF 12.% AND A SLOPE LENGTH OF 200. FEET.

SCS RUNOFF CURVE NUMBER	=	86.70	
FRACTION OF AREA ALLOWING RUNOFF	=	50.0	PERCENT
AREA PROJECTED ON HORIZONTAL PLANE	=	11.900	ACRES
EVAPORATIVE ZONE DEPTH	=	10.0	INCHES
INITIAL WATER IN EVAPORATIVE ZONE	=	2.824	INCHES
UPPER LIMIT OF EVAPORATIVE STORAGE	=	4.630	INCHES
LOWER LIMIT OF EVAPORATIVE STORAGE	=	1.160	INCHES
INITIAL SNOW WATER	=	0.998	INCHES
INITIAL WATER IN LAYER MATERIALS	=	232.976	INCHES

TOTAL INITIAL WATER = 233.973 INCHES
TOTAL SUBSURFACE INFLOW = 0.00
INCHES/YEAR

EVAPOTRANSPIRATION AND WEATHER DATA

NOTE: EVAPOTRANSPIRATION DATA WAS OBTAINED FROM
DULUTH MINNESOTA

STATION LATITUDE = 46.50
DEGREES
MAXIMUM LEAF AREA INDEX = 0.50
START OF GROWING SEASON (JULIAN DATE) = 144
END OF GROWING SEASON (JULIAN DATE) = 261
EVAPORATIVE ZONE DEPTH = 10.0
INCHES
AVERAGE ANNUAL WIND SPEED = 11.20 MPH
AVERAGE 1ST QUARTER RELATIVE HUMIDITY = 70.00 %
AVERAGE 2ND QUARTER RELATIVE HUMIDITY = 66.00 %
AVERAGE 3RD QUARTER RELATIVE HUMIDITY = 74.00 %
AVERAGE 4TH QUARTER RELATIVE HUMIDITY = 74.00 %

NOTE: PRECIPITATION DATA WAS SYNTHETICALLY GENERATED
USING
COEFFICIENTS FOR DULUTH
MINNESOTA

NORMAL MEAN MONTHLY PRECIPITATION (INCHES)

JAN/JUL	FEB/AUG	MAR/SEP	APR/OCT	MAY/NOV	JUN/DEC
1.20	0.90	1.78	2.16	3.15	3.96
3.96	4.12	3.26	2.21	1.69	1.29

NOTE: TEMPERATURE DATA WAS SYNTHETICALLY GENERATED
USING
COEFFICIENTS FOR DULUTH
MINNESOTA

NORMAL MEAN MONTHLY TEMPERATURE (DEGREES

FAHRENHEIT)

JAN/JUL	FEB/AUG	MAR/SEP	APR/OCT	MAY/NOV	JUN/DEC
6.30	12.00	22.90	38.30	50.30	59.40
65.30	63.20	54.00	44.20	28.20	13.80

NOTE: SOLAR RADIATION DATA WAS SYNTHETICALLY GENERATED USING
COEFFICIENTS FOR DULUTH MINNESOTA
AND STATION LATITUDE = 46.50 DEGREES

****

MONTHLY TOTALS (IN INCHES) FOR YEAR 1

	JAN/JUL	FEB/AUG	MAR/SEP	APR/OCT	MAY/NOV	JUN/DEC
PRECIPITATION	0.51	0.83	1.24	1.02	1.64	3.93
	3.41	3.48	2.98	0.90	2.99	0.77
RUNOFF	0.000	0.000	0.892	0.379	0.138	0.000
	0.021	0.019	0.002	0.000	0.000	0.009
EVAPOTRANSPIRATION	0.510	0.500	0.431	0.190	1.918	4.358
	2.302	4.632	2.447	0.969	0.979	0.478

```
 LATERAL DRAINAGE COLLECTED        0.0241  0.0073  0.0028  0.0009
0.0527  0.5883
   FROM LAYER  5                   0.9698  0.3503  0.1190  0.1515
0.1755  0.0768

 PERCOLATION/LEAKAGE THROUGH       0.0000  0.0000  0.0000  0.0000
0.0000  0.0001
   LAYER  7                        0.0002  0.0001  0.0000  0.0000
0.0000  0.0000


 ---------------------------------------------------------------
---------------
                    MONTHLY SUMMARIES FOR DAILY HEADS (INCHES)
 ---------------------------------------------------------------
---------------


 AVERAGE DAILY HEAD ON             0.057   0.019   0.007   0.002
0.125   1.442
   TOP OF LAYER  6                 2.300   0.831   0.292   0.359
0.430   0.182

 STD. DEVIATION OF DAILY           0.019   0.006   0.002   0.001
0.163   1.006
   HEAD ON TOP OF LAYER  6         0.641   0.244   0.092   0.128
0.056   0.058


*****************************************************************
**************



*****************************************************************
**************

                           ANNUAL TOTALS FOR YEAR    1
 ---------------------------------------------------------------
---------------
                                          INCHES          CU.
FEET     PERCENT
                                         --------
----------    -------
   PRECIPITATION                           23.70
1023769.000    100.00

   RUNOFF                                   1.460
63060.348      6.16

   EVAPOTRANSPIRATION                      19.713
```

851545.500 83.18

DRAINAGE COLLECTED FROM LAYER 5 2.5188
108804.062 10.63

PERC./LEAKAGE THROUGH LAYER 7 0.000486
20.986 0.00

AVG. HEAD ON TOP OF LAYER 6 0.5039

CHANGE IN WATER STORAGE 0.008
338.136 0.03

SOIL WATER AT START OF YEAR 232.976
10063858.000

SOIL WATER AT END OF YEAR 232.984
10064196.000

SNOW WATER AT START OF YEAR 0.998
43090.629 4.21

SNOW WATER AT END OF YEAR 0.998
43090.629 4.21

ANNUAL WATER BUDGET BALANCE 0.0000 -
0.090 0.00

****
****

****
****

MONTHLY TOTALS (IN INCHES) FOR YEAR 2

	JAN/JUL	FEB/AUG	MAR/SEP	APR/OCT	MAY/NOV	JUN/DEC
PRECIPITATION	0.65	0.95	1.83	5.02	4.48	5.12

```
                                    3.67    1.18    4.03    1.03
0.50    2.51

 RUNOFF                             0.000   0.000   1.361   1.886
0.017   0.127
                                    0.195   0.000   0.039   0.000
0.000   0.000

 EVAPOTRANSPIRATION                 0.386   0.428   0.462   0.919
4.104   3.708
                                    4.042   0.419   3.232   1.537
0.828   0.358

 LATERAL DRAINAGE COLLECTED         0.0248  0.0075  0.0028  0.0658
0.4490  0.7136
   FROM LAYER  5                    1.4681  2.1327  1.2820  0.6248
0.2577  0.0882

 PERCOLATION/LEAKAGE THROUGH        0.0000  0.0000  0.0000  0.0000
0.0001  0.0001
   LAYER  7                         0.0003  0.0004  0.0002  0.0001
0.0001  0.0000


 ---------------------------------------------------------------------
---------------
                     MONTHLY SUMMARIES FOR DAILY HEADS (INCHES)
 ---------------------------------------------------------------------
---------------


 AVERAGE DAILY HEAD ON              0.059   0.020   0.007   0.161
1.065   1.749
   TOP OF LAYER  6                  3.483   5.059   3.143   1.482
0.632   0.209

 STD. DEVIATION OF DAILY            0.019   0.006   0.002   0.180
0.206   0.427
   HEAD ON TOP OF LAYER  6          1.025   0.248   0.817   0.331
0.193   0.069


*********************************************************************
**************


*********************************************************************
**************

                         ANNUAL TOTALS FOR YEAR     2
```

```
-----------------------------------------------------------------
---------------
                                          INCHES          CU.
FEET     PERCENT
                                         --------
----------    -------
   PRECIPITATION                          30.97
1337811.120    100.00

   RUNOFF                                  3.627
156661.016     11.71

   EVAPOTRANSPIRATION                     20.423
882215.812     65.94

   DRAINAGE COLLECTED FROM LAYER  5        7.1171
307437.906     22.98

   PERC./LEAKAGE THROUGH LAYER  7          0.001267
54.724      0.00

   AVG. HEAD ON TOP OF LAYER  6            1.4224

   CHANGE IN WATER STORAGE                -0.198          -
8558.572     -0.64

   SOIL WATER AT START OF YEAR           232.984
10064196.000

   SOIL WATER AT END OF YEAR             232.000
10021707.000

   SNOW WATER AT START OF YEAR             0.998
43090.629      3.22

   SNOW WATER AT END OF YEAR               1.783
77021.141      5.76

   ANNUAL WATER BUDGET BALANCE             0.0000
0.249      0.00


*****************************************************************
**************

*****************************************************************
```

****

MONTHLY TOTALS (IN INCHES) FOR YEAR 3

	JAN/JUL	FEB/AUG	MAR/SEP	APR/OCT	MAY/NOV	JUN/DEC
PRECIPITATION	1.30	0.56	0.82	0.74	6.23	9.47
	5.20	2.18	2.92	1.15	1.01	1.18
RUNOFF	0.000	0.000	0.008	1.098	0.090	0.689
	0.145	0.000	0.022	0.000	0.000	0.000
EVAPOTRANSPIRATION	0.485	0.571	0.670	0.425	4.955	5.426
	5.385	1.776	2.681	1.575	0.645	0.358
LATERAL DRAINAGE COLLECTED	0.0283	0.0086	0.0032	0.0010	0.0509	0.4204
FROM LAYER 5	1.3746	0.8881	1.8897	1.5357	0.5028	0.1700
PERCOLATION/LEAKAGE THROUGH	0.0000	0.0000	0.0000	0.0000	0.0000	0.0001
LAYER 7	0.0002	0.0002	0.0003	0.0003	0.0001	0.0000

MONTHLY SUMMARIES FOR DAILY HEADS (INCHES)

AVERAGE DAILY HEAD ON	0.067	0.022	0.008	0.002	0.121	1.031
TOP OF LAYER 6	3.261	2.107	4.632	3.643	1.233	0.403
STD. DEVIATION OF DAILY	0.022	0.007	0.003	0.001	0.156	0.785
HEAD ON TOP OF LAYER 6	0.519	0.320	0.817	1.107		

0.395 0.133

****
****

****
****

ANNUAL TOTALS FOR YEAR 3

	INCHES	CU. FEET	PERCENT
PRECIPITATION	32.76	1415133.870	100.00
RUNOFF	2.052	88633.867	6.26
EVAPOTRANSPIRATION	24.952	1077841.370	76.17
DRAINAGE COLLECTED FROM LAYER 5	6.8732	296902.437	20.98
PERC./LEAKAGE THROUGH LAYER 7	0.001218	52.616	0.00
AVG. HEAD ON TOP OF LAYER 6	1.3775		
CHANGE IN WATER STORAGE	-1.118	-48296.852	-3.41
SOIL WATER AT START OF YEAR	232.000	10021707.000	
SOIL WATER AT END OF YEAR	231.843	10014921.000	
SNOW WATER AT START OF YEAR	1.783	77021.141	5.44
SNOW WATER AT END OF YEAR	0.822	35510.074	2.51
ANNUAL WATER BUDGET BALANCE	0.0000		

0.509 0.00

****
****

****
****

MONTHLY TOTALS (IN INCHES) FOR YEAR 4

	JAN/JUL	FEB/AUG	MAR/SEP	APR/OCT	MAY/NOV	JUN/DEC
PRECIPITATION	1.30	0.82	1.74	1.50	3.81	3.92
	1.36	4.38	2.44	0.90	0.60	2.09
RUNOFF	0.000	0.000	0.077	1.862	0.379	0.043
	0.000	0.083	0.000	0.000	0.000	0.000
EVAPOTRANSPIRATION	0.286	0.605	0.395	0.105	3.596	2.983
	2.189	3.712	2.141	0.697	0.772	0.397
LATERAL DRAINAGE COLLECTED	0.0545	0.0168	0.0060	0.0019	0.0311	0.2486
FROM LAYER 5	1.5425	0.9209	0.5162	0.2789	0.1203	0.0407
PERCOLATION/LEAKAGE THROUGH	0.0000	0.0000	0.0000	0.0000	0.0000	0.0000
LAYER 7	0.0003	0.0002	0.0001	0.0001	0.0000	0.0000

MONTHLY SUMMARIES FOR DAILY HEADS (INCHES)

AVERAGE DAILY HEAD ON	0.129	0.043	0.014	0.005	0.074	0.609
TOP OF LAYER 6	3.659	2.185	1.265	0.662	0.295	0.096
STD. DEVIATION OF DAILY	0.043	0.013	0.005	0.001	0.085	0.554
HEAD ON TOP OF LAYER 6	0.659	0.549	0.225	0.095	0.094	0.032

****

****

ANNUAL TOTALS FOR YEAR 4

	INCHES	CU. FEET	PERCENT
PRECIPITATION	24.86	1073877.870	100.00
RUNOFF	2.444	105577.687	9.83
EVAPOTRANSPIRATION	17.877	772214.062	71.91
DRAINAGE COLLECTED FROM LAYER 5	3.7784	163214.000	15.20
PERC./LEAKAGE THROUGH LAYER 7	0.000699	30.210	0.00
AVG. HEAD ON TOP OF LAYER 6	0.7530		
CHANGE IN WATER STORAGE	0.760	32842.016	3.06

```
   SOIL WATER AT START OF YEAR            231.843
10014921.000

   SOIL WATER AT END OF YEAR              231.632
10005817.000

   SNOW WATER AT START OF YEAR              0.822
35510.074      3.31

   SNOW WATER AT END OF YEAR                1.793
77456.703      7.21

   ANNUAL WATER BUDGET BALANCE              0.0000          -
0.078      0.00

*****************************************************************
**************


*****************************************************************
**************

                    MONTHLY TOTALS (IN INCHES) FOR YEAR    5
 ---------------------------------------------------------------
---------------

                                   JAN/JUL FEB/AUG MAR/SEP APR/OCT
MAY/NOV JUN/DEC
                                   ------- ------- ------- -------
------- -------

 PRECIPITATION                      1.17    1.36    1.38    2.26
2.94    4.38
                                    4.36    4.15    2.62    0.85
2.04    1.60

 RUNOFF                             0.000   0.000   1.838   0.946
0.643   0.046
                                    0.066   0.173   0.000   0.000
0.133   0.183

 EVAPOTRANSPIRATION                 0.322   0.358   0.537   0.454
2.841   3.658
                                    4.403   2.763   2.432   1.204
0.350   0.369
```

```
 LATERAL DRAINAGE COLLECTED        0.0130  0.0039  0.0015  0.0005
0.1145  0.4962
   FROM LAYER  5                   1.4845  0.9887  0.8204  0.3956
0.1321  0.0447

 PERCOLATION/LEAKAGE THROUGH       0.0000  0.0000  0.0000  0.0000
0.0000  0.0001
   LAYER  7                        0.0003  0.0002  0.0001  0.0001
0.0000  0.0000


 ---------------------------------------------------------------
---------------
                    MONTHLY SUMMARIES FOR DAILY HEADS (INCHES)
 ---------------------------------------------------------------
---------------


 AVERAGE DAILY HEAD ON             0.031   0.010   0.004   0.001
0.272   1.216
   TOP OF LAYER  6                 3.522   2.345   2.011   0.938
0.324   0.106

 STD. DEVIATION OF DAILY           0.010   0.003   0.001   0.001
0.337   0.400
   HEAD ON TOP OF LAYER  6         0.408   0.494   0.350   0.257
0.104   0.035


*****************************************************************
**************


*****************************************************************
**************

                           ANNUAL TOTALS FOR YEAR    5
 ---------------------------------------------------------------
---------------
                                          INCHES          CU.
FEET     PERCENT
                                         --------
----------    -------
   PRECIPITATION                           29.11
1257464.620    100.00

   RUNOFF                                   4.027
173961.266     13.83

   EVAPOTRANSPIRATION                      19.692
```

850633.187 67.65

DRAINAGE COLLECTED FROM LAYER 5 4.4956
194196.172 15.44

PERC./LEAKAGE THROUGH LAYER 7 0.000824
35.596 0.00

AVG. HEAD ON TOP OF LAYER 6 0.8983

CHANGE IN WATER STORAGE 0.894
38638.277 3.07

SOIL WATER AT START OF YEAR 231.632
10005817.000

SOIL WATER AT END OF YEAR 233.569
10089490.000

SNOW WATER AT START OF YEAR 1.793
77456.703 6.16

SNOW WATER AT END OF YEAR 0.751
32421.232 2.58

ANNUAL WATER BUDGET BALANCE 0.0000
0.128 0.00

****
****

****
****

MONTHLY TOTALS (IN INCHES) FOR YEAR 6

	JAN/JUL	FEB/AUG	MAR/SEP	APR/OCT	MAY/NOV	JUN/DEC
PRECIPITATION	0.80	1.02	2.30	2.75	3.91	1.39

```
                                    4.52    3.27    3.87    1.54
3.17    1.03

 RUNOFF                             0.000   0.000   1.626   1.357
0.365   0.000
                                    0.112   0.043   0.002   0.000
0.100   0.000

 EVAPOTRANSPIRATION                 0.383   0.500   0.486   0.212
4.040   1.641
                                    3.419   2.833   3.282   1.038
1.160   0.510

 LATERAL DRAINAGE COLLECTED         0.0143  0.0043  0.0017  0.2065
0.7577  0.8328
   FROM LAYER  5                    1.5553  0.7825  0.4354  0.6552
0.3706  0.7535

 PERCOLATION/LEAKAGE THROUGH        0.0000  0.0000  0.0000  0.0000
0.0001  0.0002
   LAYER  7                         0.0003  0.0001  0.0001  0.0001
0.0001  0.0001


 ------------------------------------------------------------------
---------------
                     MONTHLY SUMMARIES FOR DAILY HEADS (INCHES)
 ------------------------------------------------------------------
---------------


 AVERAGE DAILY HEAD ON              0.034   0.011   0.004   0.506
1.798   2.041
   TOP OF LAYER  6                  3.689   1.856   1.067   1.554
0.909   1.788

 STD. DEVIATION OF DAILY            0.011   0.003   0.001   0.420
0.486   0.672
   HEAD ON TOP OF LAYER  6          0.669   0.210   0.211   0.253
0.168   0.607


*****************************************************************
**************


*****************************************************************
**************

                         ANNUAL TOTALS FOR YEAR     6
```

```
 ------------------------------------------------------------------
---------------
                                          INCHES          CU.
FEET     PERCENT
                                         --------
----------    -------
   PRECIPITATION                          29.57
1277335.620    100.00

   RUNOFF                                  3.605
155735.109     12.19

   EVAPOTRANSPIRATION                     19.504
842534.687     65.96

   DRAINAGE COLLECTED FROM LAYER  5        6.3700
275164.156     21.54

   PERC./LEAKAGE THROUGH LAYER  7          0.001166
50.353      0.00

   AVG. HEAD ON TOP OF LAYER  6            1.2715

   CHANGE IN WATER STORAGE                 0.089
3850.683      0.30

   SOIL WATER AT START OF YEAR            233.569
10089490.000

   SOIL WATER AT END OF YEAR              233.443
10084049.000

   SNOW WATER AT START OF YEAR             0.751
32421.232      2.54

   SNOW WATER AT END OF YEAR               0.966
41713.727      3.27

   ANNUAL WATER BUDGET BALANCE             0.0000
0.584      0.00


******************************************************************
**************

******************************************************************
```

****

MONTHLY TOTALS (IN INCHES) FOR YEAR 7

	JAN/JUL	FEB/AUG	MAR/SEP	APR/OCT	MAY/NOV	JUN/DEC
PRECIPITATION	0.70	0.54	1.87	2.47	4.50	6.03
	5.57	2.56	2.03	3.90	1.25	0.79
RUNOFF	0.000	0.115	0.751	1.248	0.456	0.005
	0.343	0.016	0.000	0.130	0.201	0.002
EVAPOTRANSPIRATION	0.388	0.353	0.513	0.445	4.249	4.754
	3.861	2.556	1.156	1.833	0.376	0.370
LATERAL DRAINAGE COLLECTED	0.5525	0.1950	0.0738	0.0264	0.1422	0.2950
FROM LAYER 5	1.6747	1.5243	1.5369	0.6006	0.5160	1.2153
PERCOLATION/LEAKAGE THROUGH	0.0001	0.0000	0.0000	0.0000	0.0000	0.0001
LAYER 7	0.0003	0.0003	0.0003	0.0001	0.0001	0.0002

MONTHLY SUMMARIES FOR DAILY HEADS (INCHES)

AVERAGE DAILY HEAD ON	1.311	0.512	0.175	0.065	0.337	0.723
TOP OF LAYER 6	3.973	3.616	3.767	1.425	1.265	2.883
STD. DEVIATION OF DAILY	0.313	0.153	0.058	0.017	0.195	0.452
HEAD ON TOP OF LAYER 6	0.928	0.437	0.859	0.424		

0.416 0.523

****
****

****
****

ANNUAL TOTALS FOR YEAR 7

	INCHES	CU. FEET	PERCENT
PRECIPITATION	32.21	1391375.620	100.00
RUNOFF	3.267	141137.609	10.14
EVAPOTRANSPIRATION	20.855	900877.812	64.75
DRAINAGE COLLECTED FROM LAYER 5	8.3527	360812.125	25.93
PERC./LEAKAGE THROUGH LAYER 7	0.001496	64.618	0.00
AVG. HEAD ON TOP OF LAYER 6	1.6710		
CHANGE IN WATER STORAGE	-0.267	11516.674	-0.83
SOIL WATER AT START OF YEAR	233.443	10084049.000	
SOIL WATER AT END OF YEAR	233.808	10099795.000	
SNOW WATER AT START OF YEAR	0.966	41713.727	3.00
SNOW WATER AT END OF YEAR	0.335	14451.002	1.04
ANNUAL WATER BUDGET BALANCE	0.0000		

0.110 0.00

****
****

****
****

MONTHLY TOTALS (IN INCHES) FOR YEAR 8

	JAN/JUL	FEB/AUG	MAR/SEP	APR/OCT	MAY/NOV	JUN/DEC
PRECIPITATION	0.84	0.33	2.47	1.25	2.67	4.55
	4.53	4.01	2.82	1.78	0.85	1.35
RUNOFF	0.011	0.000	1.015	0.576	0.230	0.004
	0.035	0.006	0.000	0.000	0.000	0.000
EVAPOTRANSPIRATION	0.632	0.674	0.461	0.047	3.215	4.978
	3.169	4.132	2.338	2.155	0.750	0.336
LATERAL DRAINAGE COLLECTED	0.5050	0.1564	0.0559	0.0182	0.0907	0.7468
FROM LAYER 5	0.9667	0.4600	0.4416	0.2499	0.1819	0.0776
PERCOLATION/LEAKAGE THROUGH	0.0001	0.0000	0.0000	0.0000	0.0000	0.0001
LAYER 7	0.0002	0.0001	0.0001	0.0001	0.0000	0.0000

MONTHLY SUMMARIES FOR DAILY HEADS (INCHES)

AVERAGE DAILY HEAD ON	1.198	0.396	0.133	0.045	0.215	1.831
TOP OF LAYER 6	2.293	1.091	1.082	0.593	0.446	0.184
STD. DEVIATION OF DAILY	0.391	0.123	0.044	0.012	0.166	1.169
HEAD ON TOP OF LAYER 6	0.623	0.143	0.142	0.077	0.061	0.061

****

****

ANNUAL TOTALS FOR YEAR 8

	INCHES	CU. FEET	PERCENT
PRECIPITATION	27.45	1185757.620	100.00
RUNOFF	1.876	81032.359	6.83
EVAPOTRANSPIRATION	22.889	988744.812	83.39
DRAINAGE COLLECTED FROM LAYER 5	3.9506	170652.312	14.39
PERC./LEAKAGE THROUGH LAYER 7	0.000757	32.692	0.00
AVG. HEAD ON TOP OF LAYER 6	0.7922		
CHANGE IN WATER STORAGE	-1.266	-54705.109	-4.61

```
   SOIL WATER AT START OF YEAR                233.808
10099795.000

   SOIL WATER AT END OF YEAR                  231.862
10015727.000

   SNOW WATER AT START OF YEAR                  0.335
14451.002      1.22

   SNOW WATER AT END OF YEAR                    1.014
43813.801      3.70

   ANNUAL WATER BUDGET BALANCE                  0.0000
0.564      0.00

*****************************************************************
**************

*****************************************************************
**************

                    MONTHLY TOTALS (IN INCHES) FOR YEAR    9
 ---------------------------------------------------------------
---------------

                                   JAN/JUL FEB/AUG MAR/SEP APR/OCT
MAY/NOV JUN/DEC
                                   ------- ------- ------- -------
------- -------

 PRECIPITATION                      2.37    0.35    2.02    2.08
3.03    3.57
                                    2.57    2.42    3.75    1.03
2.53    2.17

 RUNOFF                             0.000   0.000   1.099   1.565
0.011   0.109
                                    0.008   0.000   0.005   0.000
0.000   0.000

 EVAPOTRANSPIRATION                 0.413   0.392   0.426   0.269
3.400   2.927
                                    2.623   1.580   2.666   2.323
0.801   0.375
```

```
 LATERAL DRAINAGE COLLECTED        0.0249  0.0075  0.0028  0.0360
0.3671  0.7441
   FROM LAYER  5                   1.6303  0.9816  0.3675  0.2139
0.2509  0.2425

 PERCOLATION/LEAKAGE THROUGH       0.0000  0.0000  0.0000  0.0000
0.0001  0.0001
   LAYER  7                        0.0003  0.0002  0.0001  0.0000
0.0001  0.0000


 ------------------------------------------------------------------
---------------
                    MONTHLY SUMMARIES FOR DAILY HEADS (INCHES)
 ------------------------------------------------------------------
---------------


 AVERAGE DAILY HEAD ON             0.059   0.020   0.007   0.088
0.871   1.824
   TOP OF LAYER  6                 3.867   2.329   0.901   0.508
0.615   0.575

 STD. DEVIATION OF DAILY           0.019   0.006   0.002   0.167
0.096   1.069
   HEAD ON TOP OF LAYER  6         0.375   0.612   0.281   0.128
0.097   0.070


*****************************************************************
**************



*****************************************************************
**************

                           ANNUAL TOTALS FOR YEAR    9
 ------------------------------------------------------------------
---------------
                                          INCHES          CU.
FEET     PERCENT
                                         --------
----------    -------
   PRECIPITATION                           27.89
1204764.500    100.00

   RUNOFF                                   2.798
120846.727     10.03

   EVAPOTRANSPIRATION                      18.192
```

785845.937 65.23

DRAINAGE COLLECTED FROM LAYER 5 4.8690
210328.219 17.46

PERC./LEAKAGE THROUGH LAYER 7 0.000898
38.784 0.00

AVG. HEAD ON TOP OF LAYER 6 0.9719

CHANGE IN WATER STORAGE 2.030
87704.500 7.28

SOIL WATER AT START OF YEAR 231.862
10015727.000

SOIL WATER AT END OF YEAR 232.856
10058680.000

SNOW WATER AT START OF YEAR 1.014
43813.801 3.64

SNOW WATER AT END OF YEAR 2.050
88564.523 7.35

ANNUAL WATER BUDGET BALANCE 0.0000
0.321 0.00

****
****

****
****

MONTHLY TOTALS (IN INCHES) FOR YEAR 10

	JAN/JUL	FEB/AUG	MAR/SEP	APR/OCT	MAY/NOV	JUN/DEC
PRECIPITATION	1.23	0.49	2.43	2.43	1.99	2.97

```
                                    1.98     6.68     3.82     2.35
1.16     1.17

 RUNOFF                             0.000    0.092    1.440    1.613
0.280    0.021
                                    0.001    0.046    0.032    0.087
0.045    0.000

 EVAPOTRANSPIRATION                 0.354    0.465    0.589    0.315
2.459    3.147
                                    1.586    4.063    3.152    2.000
0.445    0.324

 LATERAL DRAINAGE COLLECTED         0.2044   0.0747   0.0288   0.0870
0.4632   0.7905
   FROM LAYER  5                    1.5947   0.6600   0.5019   1.0344
1.4294   0.8335

 PERCOLATION/LEAKAGE THROUGH        0.0000   0.0000   0.0000   0.0000
0.0001   0.0001
   LAYER  7                         0.0003   0.0001   0.0001   0.0002
0.0002   0.0002


 ------------------------------------------------------------------
---------------
                     MONTHLY SUMMARIES FOR DAILY HEADS (INCHES)
 ------------------------------------------------------------------
---------------


 AVERAGE DAILY HEAD ON              0.485    0.196    0.068    0.213
1.099    1.938
   TOP OF LAYER  6                  3.783    1.566    1.230    2.454
3.504    1.977

 STD. DEVIATION OF DAILY            0.085    0.059    0.021    0.154
0.534    0.638
   HEAD ON TOP OF LAYER  6          0.606    0.494    0.480    0.862
0.300    0.556


*****************************************************************
**************


*****************************************************************
**************

                         ANNUAL TOTALS FOR YEAR    10
```

```
-----------------------------------------------------------------
---------------
                                          INCHES          CU.
FEET     PERCENT
                                         --------
----------    -------
   PRECIPITATION                          28.70
1239754.000    100.00

   RUNOFF                                  3.658
158008.594     12.75

   EVAPOTRANSPIRATION                     18.899
816359.062     65.85

   DRAINAGE COLLECTED FROM LAYER  5        7.7025
332726.406     26.84

   PERC./LEAKAGE THROUGH LAYER  7          0.001394
60.228      0.00

   AVG. HEAD ON TOP OF LAYER  6            1.5428

   CHANGE IN WATER STORAGE                -1.560        -
67399.742     -5.44

   SOIL WATER AT START OF YEAR           232.856
10058680.000

   SOIL WATER AT END OF YEAR             232.500
10043306.000

   SNOW WATER AT START OF YEAR             2.050
88564.523      7.14

   SNOW WATER AT END OF YEAR               0.846
36539.082      2.95

   ANNUAL WATER BUDGET BALANCE             0.0000          -
0.520      0.00


*****************************************************************
**************


*****************************************************************
```

****

AVERAGE MONTHLY VALUES IN INCHES FOR YEARS 1 THROUGH 10

	JAN/JUL	FEB/AUG	MAR/SEP	APR/OCT	MAY/NOV	JUN/DEC
PRECIPITATION						
TOTALS	1.09	0.72	1.81	2.15	3.52	4.53
	3.72	3.43	3.13	1.54	1.61	1.47
STD. DEVIATIONS	0.54	0.33	0.54	1.22	1.36	2.13
	1.39	1.52	0.69	0.96	0.99	0.61
RUNOFF						
TOTALS	0.001	0.021	1.011	1.253	0.261	0.104
	0.093	0.039	0.010	0.022	0.048	0.019
STD. DEVIATIONS	0.004	0.044	0.609	0.511	0.205	0.210
	0.110	0.054	0.015	0.047	0.072	0.057
EVAPOTRANSPIRATION						
TOTALS	0.416	0.485	0.497	0.338	3.478	3.758
	3.298	2.847	2.553	1.533	0.711	0.387
STD. DEVIATIONS	0.101	0.107	0.083	0.248	0.910	1.144
	1.159	1.325	0.630	0.547	0.262	0.060
LATERAL DRAINAGE COLLECTED FROM LAYER 5						
TOTALS	0.1446	0.0482	0.0179	0.0444	0.2519	0.5876
	1.4261	0.9689	0.7911	0.5740		

```
0.3937   0.3543

     STD. DEVIATIONS          0.2106   0.0710   0.0264   0.0642
0.2446   0.2118
                              0.2559   0.5211   0.5816   0.4319
0.3908   0.4210

   PERCOLATION/LEAKAGE THROUGH LAYER  7
   -------------------------------------
     TOTALS                   0.0000   0.0000   0.0000   0.0000
0.0000   0.0001
                              0.0002   0.0002   0.0001   0.0001
0.0001   0.0001

     STD. DEVIATIONS          0.0000   0.0000   0.0000   0.0000
0.0000   0.0000
                              0.0000   0.0001   0.0001   0.0001
0.0001   0.0001


 ------------------------------------------------------------------
---------------
                AVERAGES OF MONTHLY AVERAGED DAILY HEADS (INCHES)
 ------------------------------------------------------------------
---------------


   DAILY AVERAGE HEAD ON TOP OF LAYER  6
   --------------------------------------
     AVERAGES                 0.3430   0.1250   0.0425   0.1089
0.5976   1.4404
                              3.3831   2.2985   1.9391   1.3618
0.9651   0.8404

     STD. DEVIATIONS          0.4995   0.1842   0.0625   0.1575
0.5802   0.5193
                              0.6070   1.2362   1.4256   1.0245
0.9581   0.9988


*****************************************************************
**************


*****************************************************************
**************

      AVERAGE ANNUAL TOTALS & (STD. DEVIATIONS) FOR YEARS    1
THROUGH   10
 ------------------------------------------------------------------
```

```
---------------
                                        INCHES            CU. FEET
PERCENT
                                  -------------------
-------------   ---------
  PRECIPITATION                    28.72    (   2.922)    1240704.5
100.00

  RUNOFF                            2.881   (  0.8858)
124465.47     10.032

  EVAPOTRANSPIRATION               20.300   (  2.1678)
876881.25     70.676

  LATERAL DRAINAGE COLLECTED        5.60279 (  1.93794)
242023.781   19.50697
    FROM LAYER  5

  PERCOLATION/LEAKAGE THROUGH       0.00102 (  0.00033)
44.081     0.00355
    LAYER  7

  AVERAGE HEAD ON TOP               1.120 (    0.388)
    OF LAYER  6

  CHANGE IN WATER STORAGE          -0.063   (  1.0989)      -
2710.33     -0.218

*****************************************************************
**************
```

```
*****************************************************************
*************

                 PEAK DAILY VALUES FOR YEARS    1 THROUGH   10
    ---------------------------------------------------------------
-----------
                                                   (INCHES)
(CU. FT.)
                                                  ----------
-------------
       PRECIPITATION                                3.44
148597.672

       RUNOFF                                       0.945
40836.9336

       DRAINAGE COLLECTED FROM LAYER  5             0.07979
3446.57666

       PERCOLATION/LEAKAGE THROUGH LAYER  7         0.000013
0.57201

       AVERAGE HEAD ON TOP OF LAYER  6              5.867

       MAXIMUM HEAD ON TOP OF LAYER  6              7.896

       LOCATION OF MAXIMUM HEAD IN LAYER  5
             (DISTANCE FROM DRAIN)                 32.7 FEET

       SNOW WATER                                   4.52
195120.2970


       MAXIMUM VEG. SOIL WATER (VOL/VOL)                    0.4630

       MINIMUM VEG. SOIL WATER (VOL/VOL)                    0.1160

        ***  Maximum heads are computed using McEnroe's
equations.  ***

            Reference:  Maximum Saturated Depth over Landfill
Liner
                        by Bruce M. McEnroe, University of
Kansas
                        ASCE Journal of Environmental
Engineering
                        Vol. 119, No. 2, March 1993, pp. 262-
270.
```

****
****

****
****

FINAL WATER STORAGE AT END OF YEAR 10

LAYER	(INCHES)	(VOL/VOL)
1	2.4268	0.2022
2	35.0400	0.2920
3	2.7840	0.2320
4	181.0400	0.2920
5	0.9613	0.0801
6	0.0000	0.0000
7	10.2480	0.4270
SNOW WATER	0.846	

****
****

****
****

```
******************************************************************
*************

******************************************************************
*************
 **
**
 **
**
 **                HYDROLOGIC EVALUATION OF LANDFILL PERFORMANCE
**
 **                  HELP MODEL VERSION 3.07  (1 NOVEMBER 1997)
**
 **                    DEVELOPED BY ENVIRONMENTAL LABORATORY
**
 **                      USAE WATERWAYS EXPERIMENT STATION
**
 **               FOR USEPA RISK REDUCTION ENGINEERING LABORATORY
**
 **
**
 **
**

******************************************************************
*************

******************************************************************
*************


 PRECIPITATION DATA FILE:     c:\download\Phase2.D4
 TEMPERATURE DATA FILE:       c:\download\Phase2.D7
 SOLAR RADIATION DATA FILE:   c:\download\Phase2.D13
 EVAPOTRANSPIRATION DATA:     c:\download\Phase2.D11
 SOIL AND DESIGN DATA FILE:   c:\download\Phase2.D10
 OUTPUT DATA FILE:            c:\download\Phase2.OUT


 TIME:  15:25     DATE:   5/29/2013


******************************************************************
*************
```

TITLE: Regional Landfill Phase 2

****
****

NOTE: INITIAL MOISTURE CONTENT OF THE LAYERS AND SNOW WATER WERE
COMPUTED AS NEARLY STEADY-STATE VALUES BY THE PROGRAM.

LAYER 1

TYPE 1 - VERTICAL PERCOLATION LAYER
MATERIAL TEXTURE NUMBER 8

THICKNESS	=	12.00	INCHES
POROSITY	=	0.4630	VOL/VOL
FIELD CAPACITY	=	0.2320	VOL/VOL
WILTING POINT	=	0.1160	VOL/VOL
INITIAL SOIL WATER CONTENT	=	0.2714	VOL/VOL
EFFECTIVE SAT. HYD. COND.	=	0.369999994000E-03	CM/SEC

LAYER 2

TYPE 1 - VERTICAL PERCOLATION LAYER
MATERIAL TEXTURE NUMBER 18

THICKNESS	=	720.00	INCHES
POROSITY	=	0.6710	VOL/VOL
FIELD CAPACITY	=	0.2920	VOL/VOL
WILTING POINT	=	0.0770	VOL/VOL
INITIAL SOIL WATER CONTENT	=	0.2920	VOL/VOL
EFFECTIVE SAT. HYD. COND.	=	0.100000005000E-02	CM/SEC

LAYER 3

TYPE 2 - LATERAL DRAINAGE LAYER
MATERIAL TEXTURE NUMBER 1

```
THICKNESS                    =     12.00   INCHES
POROSITY                     =      0.4170 VOL/VOL
FIELD CAPACITY               =      0.0450 VOL/VOL
WILTING POINT                =      0.0180 VOL/VOL
INITIAL SOIL WATER CONTENT   =      0.0541 VOL/VOL
EFFECTIVE SAT. HYD. COND.    =  0.999999978000E-02
CM/SEC
SLOPE                        =      3.00   PERCENT
DRAINAGE LENGTH              =    100.0    FEET
```

LAYER 4

TYPE 4 - FLEXIBLE MEMBRANE LINER
MATERIAL TEXTURE NUMBER 35

```
THICKNESS                    =      0.06   INCHES
POROSITY                     =      0.0000 VOL/VOL
FIELD CAPACITY               =      0.0000 VOL/VOL
WILTING POINT                =      0.0000 VOL/VOL
INITIAL SOIL WATER CONTENT   =      0.0000 VOL/VOL
EFFECTIVE SAT. HYD. COND.    =  0.199999996000E-12
CM/SEC
FML PINHOLE DENSITY          =      1.00   HOLES/ACRE
FML INSTALLATION DEFECTS     =      4.00   HOLES/ACRE
FML PLACEMENT QUALITY        =  3 - GOOD
```

LAYER 5

TYPE 3 - BARRIER SOIL LINER
MATERIAL TEXTURE NUMBER 16

```
THICKNESS                    =     24.00   INCHES
POROSITY                     =      0.4270 VOL/VOL
FIELD CAPACITY               =      0.4180 VOL/VOL
WILTING POINT                =      0.3670 VOL/VOL
INITIAL SOIL WATER CONTENT   =      0.4270 VOL/VOL
EFFECTIVE SAT. HYD. COND.    =  0.100000001000E-06
CM/SEC
```

GENERAL DESIGN AND EVAPORATIVE ZONE DATA

NOTE: SCS RUNOFF CURVE NUMBER WAS COMPUTED FROM DEFAULT
SOIL DATA BASE USING SOIL TEXTURE # 8 WITH BARE
GROUND CONDITIONS, A SURFACE SLOPE OF 10.% AND
A SLOPE LENGTH OF 200. FEET.

SCS RUNOFF CURVE NUMBER	=	91.00	
FRACTION OF AREA ALLOWING RUNOFF	=	10.0	PERCENT
AREA PROJECTED ON HORIZONTAL PLANE	=	2.500	ACRES
EVAPORATIVE ZONE DEPTH	=	8.0	INCHES
INITIAL WATER IN EVAPORATIVE ZONE	=	2.329	INCHES
UPPER LIMIT OF EVAPORATIVE STORAGE	=	3.704	INCHES
LOWER LIMIT OF EVAPORATIVE STORAGE	=	0.928	INCHES
INITIAL SNOW WATER	=	0.998	INCHES
INITIAL WATER IN LAYER MATERIALS	=	224.394	INCHES
TOTAL INITIAL WATER	=	225.392	INCHES
TOTAL SUBSURFACE INFLOW	=	0.00	INCHES/YEAR

EVAPOTRANSPIRATION AND WEATHER DATA

NOTE: EVAPOTRANSPIRATION DATA WAS OBTAINED FROM
DULUTH MINNESOTA

STATION LATITUDE	=	46.50	DEGREES
MAXIMUM LEAF AREA INDEX	=	0.00	
START OF GROWING SEASON (JULIAN DATE)	=	144	
END OF GROWING SEASON (JULIAN DATE)	=	261	
EVAPORATIVE ZONE DEPTH	=	8.0	INCHES
AVERAGE ANNUAL WIND SPEED	=	11.20	MPH
AVERAGE 1ST QUARTER RELATIVE HUMIDITY	=	70.00	%
AVERAGE 2ND QUARTER RELATIVE HUMIDITY	=	66.00	%
AVERAGE 3RD QUARTER RELATIVE HUMIDITY	=	74.00	%
AVERAGE 4TH QUARTER RELATIVE HUMIDITY	=	74.00	%

NOTE: PRECIPITATION DATA WAS SYNTHETICALLY GENERATED USING
COEFFICIENTS FOR DULUTH MINNESOTA

NORMAL MEAN MONTHLY PRECIPITATION (INCHES)

JAN/JUL	FEB/AUG	MAR/SEP	APR/OCT	MAY/NOV	JUN/DEC
1.20	0.90	1.78	2.16	3.15	3.96
3.96	4.12	3.26	2.21	1.69	1.29

NOTE: TEMPERATURE DATA WAS SYNTHETICALLY GENERATED USING
COEFFICIENTS FOR DULUTH MINNESOTA

NORMAL MEAN MONTHLY TEMPERATURE (DEGREES FAHRENHEIT)

JAN/JUL	FEB/AUG	MAR/SEP	APR/OCT	MAY/NOV	JUN/DEC
6.30	12.00	22.90	38.30	50.30	59.40
65.30	63.20	54.00	44.20	28.20	13.80

NOTE: SOLAR RADIATION DATA WAS SYNTHETICALLY GENERATED USING
COEFFICIENTS FOR DULUTH MINNESOTA
AND STATION LATITUDE = 46.50 DEGREES

****

MONTHLY TOTALS (IN INCHES) FOR YEAR 1

	JAN/JUL	FEB/AUG	MAR/SEP	APR/OCT	MAY/NOV	JUN/DEC

```
------- -------

 PRECIPITATION                      0.51    0.83    1.24    1.02
1.64    3.93
                                    3.41    3.48    2.98    0.90
2.99    0.77

 RUNOFF                             0.000   0.000   0.189   0.085
0.028   0.001
                                    0.016   0.019   0.006   0.000
0.000   0.002

 EVAPOTRANSPIRATION                 0.510   0.500   0.426   0.174
1.782   4.292
                                    2.107   4.417   2.302   0.628
1.035   0.478

 LATERAL DRAINAGE COLLECTED         0.0832  0.0191  0.0395  0.3905
0.7890  1.4421
   FROM LAYER  3                    0.5413  0.3452  0.2431  0.5122
0.1364  0.1601

 PERCOLATION/LEAKAGE THROUGH        0.0000  0.0000  0.0000  0.0001
0.0001  0.0002
   LAYER  5                         0.0001  0.0001  0.0000  0.0001
0.0000  0.0000


 ------------------------------------------------------------------
---------------
                     MONTHLY SUMMARIES FOR DAILY HEADS (INCHES)
 ------------------------------------------------------------------
---------------


 AVERAGE DAILY HEAD ON              0.158   0.040   0.075   0.766
1.498   2.829
   TOP OF LAYER  4                  1.028   0.655   0.477   0.972
0.268   0.304

 STD. DEVIATION OF DAILY            0.065   0.015   0.099   0.241
0.757   0.752
   HEAD ON TOP OF LAYER  4          0.383   0.115   0.163   0.297
0.106   0.122


*****************************************************************
**************
```

```
*****************************************************************
**************

                          ANNUAL TOTALS FOR YEAR    1
 ---------------------------------------------------------------
---------------
                                          INCHES          CU.
FEET     PERCENT
                                         --------
----------    -------
   PRECIPITATION                          23.70
215077.531    100.00

   RUNOFF                                  0.346
3139.525      1.46

   EVAPOTRANSPIRATION                     18.649
169242.109     78.69

   DRAINAGE COLLECTED FROM LAYER  3        4.7017
42667.742     19.84

   PERC./LEAKAGE THROUGH LAYER  5          0.000752
6.829      0.00

   AVG. HEAD ON TOP OF LAYER  4            0.7558

   CHANGE IN WATER STORAGE                 0.002
21.186      0.01

   SOIL WATER AT START OF YEAR            224.394
2036375.750

   SOIL WATER AT END OF YEAR              224.396
2036397.000

   SNOW WATER AT START OF YEAR             0.998
9052.653      4.21

   SNOW WATER AT END OF YEAR               0.998
9052.653      4.21

   ANNUAL WATER BUDGET BALANCE             0.0000
0.124      0.00

*****************************************************************
**************
```

****
****

MONTHLY TOTALS (IN INCHES) FOR YEAR 2

	JAN/JUL	FEB/AUG	MAR/SEP	APR/OCT	MAY/NOV	JUN/DEC
PRECIPITATION	0.65	0.95	1.83	5.02	4.48	5.12
	3.67	1.18	4.03	1.03	0.50	2.51
RUNOFF	0.000	0.000	0.293	0.385	0.024	0.065
	0.076	0.000	0.026	0.000	0.000	0.000
EVAPOTRANSPIRATION	0.386	0.428	0.462	0.922	3.890	3.436
	3.600	0.363	2.942	1.558	0.825	0.359
LATERAL DRAINAGE COLLECTED	0.0850	0.0195	0.0773	0.6956	1.1699	1.8561
FROM LAYER 3	2.4330	2.5381	1.4180	0.5390	0.1333	0.0341
PERCOLATION/LEAKAGE THROUGH	0.0000	0.0000	0.0000	0.0001	0.0002	0.0003
LAYER 5	0.0003	0.0004	0.0002	0.0001	0.0000	0.0000

MONTHLY SUMMARIES FOR DAILY HEADS (INCHES)

AVERAGE DAILY HEAD ON	0.161	0.041	0.147	1.365	2.221	3.641
TOP OF LAYER 4	4.619	4.818	2.782	1.023	0.261	0.065

```
 STD. DEVIATION OF DAILY          0.066   0.015   0.192   0.327
0.697   0.503
   HEAD ON TOP OF LAYER  4        0.335   0.403   0.422   0.390
0.104   0.027

*****************************************************************
**************


*****************************************************************
**************

                           ANNUAL TOTALS FOR YEAR    2
 ---------------------------------------------------------------
---------------
                                          INCHES          CU.
FEET     PERCENT
                                         --------
----------    -------
   PRECIPITATION                          30.97
281052.781    100.00

   RUNOFF                                  0.868
7874.553      2.80

   EVAPOTRANSPIRATION                     19.170
173971.656     61.90

   DRAINAGE COLLECTED FROM LAYER  3       10.9987
99813.367     35.51

   PERC./LEAKAGE THROUGH LAYER  5          0.001623
14.728      0.01

   AVG. HEAD ON TOP OF LAYER  4            1.7620

   CHANGE IN WATER STORAGE                -0.068          -
621.549     -0.22

   SOIL WATER AT START OF YEAR           224.396
2036397.000

   SOIL WATER AT END OF YEAR             223.542
2028647.120

   SNOW WATER AT START OF YEAR             0.998
9052.653      3.22
```

```
   SNOW WATER AT END OF YEAR                    1.783
16180.913      5.76

   ANNUAL WATER BUDGET BALANCE                  0.0000
0.015      0.00


*****************************************************************
**************


*****************************************************************
**************

                    MONTHLY TOTALS (IN INCHES) FOR YEAR    3
 ---------------------------------------------------------------
---------------

                                      JAN/JUL FEB/AUG MAR/SEP APR/OCT
MAY/NOV JUN/DEC
                                      ------- ------- ------- -------
------- -------

 PRECIPITATION                         1.30    0.56    0.82    0.74
6.23    9.47
                                       5.20    2.18    2.92    1.15
1.01    1.18

 RUNOFF                                0.000   0.000   0.002   0.254
0.058   0.243
                                       0.088   0.003   0.018   0.001
0.000   0.000

 EVAPOTRANSPIRATION                    0.485   0.571   0.670   0.417
4.884   5.246
                                       4.746   1.785   2.732   1.294
0.592   0.358

 LATERAL DRAINAGE COLLECTED            0.0082  0.0019  0.0005  0.1381
0.7680  1.8321
   FROM LAYER  3                       1.4688  2.2414  2.1382  0.6659
0.1580  0.0404

 PERCOLATION/LEAKAGE THROUGH           0.0000  0.0000  0.0000  0.0000
0.0001  0.0003
   LAYER  5                            0.0002  0.0003  0.0003  0.0001
0.0000  0.0000
```

```
 ------------------------------------------------------------------
---------------
                    MONTHLY SUMMARIES FOR DAILY HEADS (INCHES)
 ------------------------------------------------------------------
---------------


 AVERAGE DAILY HEAD ON            0.016   0.004   0.001   0.271
1.458   3.594
   TOP OF LAYER  4                2.788   4.255   4.194   1.264
0.310   0.077

 STD. DEVIATION OF DAILY          0.006   0.001   0.000   0.357
0.714   0.403
   HEAD ON TOP OF LAYER  4        0.327   0.691   1.057   0.518
0.123   0.032


*****************************************************************
**************


*****************************************************************
**************

                           ANNUAL TOTALS FOR YEAR    3
 ------------------------------------------------------------------
---------------
                                          INCHES          CU.
FEET     PERCENT
                                         --------
----------    -------
   PRECIPITATION                           32.76
297297.062    100.00

   RUNOFF                                   0.665
6036.875      2.03

   EVAPOTRANSPIRATION                      23.780
215799.094     72.59

   DRAINAGE COLLECTED FROM LAYER  3         9.4615
85862.914     28.88

   PERC./LEAKAGE THROUGH LAYER  5           0.001397
12.682      0.00

   AVG. HEAD ON TOP OF LAYER  4             1.5193
```

CHANGE IN WATER STORAGE -1.148 -
10414.482 -3.50

SOIL WATER AT START OF YEAR 223.542
2028647.120

SOIL WATER AT END OF YEAR 223.356
2026953.500

SNOW WATER AT START OF YEAR 1.783
16180.913 5.44

SNOW WATER AT END OF YEAR 0.822
7460.100 2.51

ANNUAL WATER BUDGET BALANCE 0.0000 -
0.028 0.00

****
****

****
****

MONTHLY TOTALS (IN INCHES) FOR YEAR 4

	JAN/JUL	FEB/AUG	MAR/SEP	APR/OCT	MAY/NOV	JUN/DEC
PRECIPITATION	1.30	0.82	1.74	1.50	3.81	3.92
	1.36	4.38	2.44	0.90	0.60	2.09
RUNOFF	0.000	0.000	0.016	0.397	0.092	0.024
	0.000	0.039	0.001	0.000	0.000	0.000
EVAPOTRANSPIRATION	0.286	0.605	0.395	0.103		

```
3.362   2.988
                                    1.961   3.450   1.967   0.619
0.847   0.397

 LATERAL DRAINAGE COLLECTED         0.0097  0.0023  0.0006  0.3141
1.3281  2.1370
   FROM LAYER  3                    1.2508  0.5642  0.5279  0.2861
0.0709  0.0182

 PERCOLATION/LEAKAGE THROUGH        0.0000  0.0000  0.0000  0.0000
0.0002  0.0003
   LAYER  5                         0.0002  0.0001  0.0001  0.0000
0.0000  0.0000


 ------------------------------------------------------------------
---------------
                    MONTHLY SUMMARIES FOR DAILY HEADS (INCHES)
 ------------------------------------------------------------------
---------------


 AVERAGE DAILY HEAD ON              0.018   0.005   0.001   0.616
2.521   4.192
   TOP OF LAYER  4                  2.374   1.071   1.036   0.543
0.139   0.035

 STD. DEVIATION OF DAILY            0.008   0.002   0.000   0.812
0.279   0.492
   HEAD ON TOP OF LAYER  4          0.806   0.410   0.261   0.196
0.055   0.014

*****************************************************************
**************



*****************************************************************
**************

                           ANNUAL TOTALS FOR YEAR    4
 ------------------------------------------------------------------
---------------
                                          INCHES          CU.
FEET     PERCENT
                                         --------
----------    -------
   PRECIPITATION                           24.86
225604.609    100.00
```

```
   RUNOFF                                          0.569
5166.978       2.29

   EVAPOTRANSPIRATION                             16.980
154091.578      68.30

   DRAINAGE COLLECTED FROM LAYER  3                6.5099
59077.359      26.19

   PERC./LEAKAGE THROUGH LAYER  5                  0.000987
8.960       0.00

   AVG. HEAD ON TOP OF LAYER  4                    1.0460

   CHANGE IN WATER STORAGE                         0.800
7259.615       3.22

   SOIL WATER AT START OF YEAR                   223.356
2026953.500

   SOIL WATER AT END OF YEAR                     223.185
2025400.750

   SNOW WATER AT START OF YEAR                     0.822
7460.100       3.31

   SNOW WATER AT END OF YEAR                       1.793
16272.418       7.21

   ANNUAL WATER BUDGET BALANCE                     0.0000
0.121       0.00


*****************************************************************
**************


*****************************************************************
**************

                    MONTHLY TOTALS (IN INCHES) FOR YEAR    5
 ---------------------------------------------------------------
---------------

                                   JAN/JUL FEB/AUG MAR/SEP APR/OCT
MAY/NOV JUN/DEC
                                   ------- ------- ------- -------
```

```
------- -------

 PRECIPITATION                      1.17    1.36    1.38    2.26
2.94    4.38
                                    4.36    4.15    2.62    0.85
2.04    1.60

 RUNOFF                             0.000   0.000   0.385   0.192
0.129   0.037
                                    0.037   0.069   0.001   0.000
0.034   0.042

 EVAPOTRANSPIRATION                 0.322   0.358   0.536   0.451
2.703   3.544
                                    4.050   2.357   2.602   1.088
0.324   0.369

 LATERAL DRAINAGE COLLECTED         0.0044  0.0010  0.2199  1.0450
0.8814  1.9556
   FROM LAYER  3                    1.9188  1.1773  0.7969  0.3113
0.0759  0.0194

 PERCOLATION/LEAKAGE THROUGH        0.0000  0.0000  0.0000  0.0002
0.0001  0.0003
   LAYER  5                         0.0003  0.0002  0.0001  0.0001
0.0000  0.0000


 ------------------------------------------------------------------
---------------
                    MONTHLY SUMMARIES FOR DAILY HEADS (INCHES)
 ------------------------------------------------------------------
---------------


 AVERAGE DAILY HEAD ON              0.008   0.002   0.418   2.050
1.673   3.836
   TOP OF LAYER  4                  3.643   2.235   1.563   0.591
0.149   0.037

 STD. DEVIATION OF DAILY            0.003   0.001   0.644   0.573
0.224   0.697
   HEAD ON TOP OF LAYER  4          0.517   0.442   0.497   0.223
0.059   0.015


*******************************************************************
**************
```

```
*****************************************************************
**************

                          ANNUAL TOTALS FOR YEAR     5
 ---------------------------------------------------------------
---------------
                                          INCHES          CU.
FEET     PERCENT
                                         --------
----------    -------
   PRECIPITATION                          29.11
264173.250    100.00

   RUNOFF                                  0.925
8391.795      3.18

   EVAPOTRANSPIRATION                     18.703
169730.219     64.25

   DRAINAGE COLLECTED FROM LAYER  3        8.4071
76294.164     28.88

   PERC./LEAKAGE THROUGH LAYER  5          0.001265
11.481      0.00

   AVG. HEAD ON TOP OF LAYER  4            1.3504

   CHANGE IN WATER STORAGE                 1.074
9745.733      3.69

   SOIL WATER AT START OF YEAR            223.185
2025400.750

   SOIL WATER AT END OF YEAR              225.301
2044607.750

   SNOW WATER AT START OF YEAR             1.793
16272.418      6.16

   SNOW WATER AT END OF YEAR               0.751
6811.184      2.58

   ANNUAL WATER BUDGET BALANCE             0.0000          -
0.135      0.00


*****************************************************************
**************
```

```
*****************************************************************
**************

                    MONTHLY TOTALS (IN INCHES) FOR YEAR    6
 ---------------------------------------------------------------
---------------

                                   JAN/JUL FEB/AUG MAR/SEP APR/OCT
MAY/NOV JUN/DEC
                                   ------- ------- ------- -------
------- -------

 PRECIPITATION                      0.80    1.02    2.30    2.75
3.91    1.39
                                    4.52    3.27    3.87    1.54
3.17    1.03

 RUNOFF                             0.000   0.000   0.341   0.271
0.080   0.000
                                    0.054   0.032   0.008   0.002
0.041   0.000

 EVAPOTRANSPIRATION                 0.383   0.500   0.486   0.209
3.952   1.454
                                    3.493   2.579   3.379   0.720
1.182   0.510

 LATERAL DRAINAGE COLLECTED         0.0047  0.0011  0.0210  0.5856
1.4966  2.5667
   FROM LAYER  3                    2.0726  1.0114  0.7312  0.6419
0.6077  0.9821

 PERCOLATION/LEAKAGE THROUGH        0.0000  0.0000  0.0000  0.0001
0.0002  0.0004
   LAYER  5                         0.0003  0.0002  0.0001  0.0001
0.0001  0.0002


 ---------------------------------------------------------------
---------------
                    MONTHLY SUMMARIES FOR DAILY HEADS (INCHES)
 ---------------------------------------------------------------
---------------


 AVERAGE DAILY HEAD ON              0.009   0.002   0.040   1.149
2.841   5.035
   TOP OF LAYER  4                  3.935   1.920   1.434   1.219
1.192   1.864
```

```
 STD. DEVIATION OF DAILY          0.004   0.001   0.074   0.487
0.483   0.458
   HEAD ON TOP OF LAYER  4        1.274   0.391   0.485   0.494
0.798   0.661

*****************************************************************
**************


*****************************************************************
**************

                          ANNUAL TOTALS FOR YEAR    6
 ---------------------------------------------------------------
---------------
                                          INCHES          CU.
FEET     PERCENT
                                         --------
----------    -------
   PRECIPITATION                          29.57
268347.812    100.00

   RUNOFF                                  0.829
7527.036      2.80

   EVAPOTRANSPIRATION                     18.848
171049.625     63.74

   DRAINAGE COLLECTED FROM LAYER  3       10.7225
97306.492     36.26

   PERC./LEAKAGE THROUGH LAYER  5          0.001596
14.487      0.01

   AVG. HEAD ON TOP OF LAYER  4            1.7200

   CHANGE IN WATER STORAGE                -0.832          -
7550.125     -2.81

   SOIL WATER AT START OF YEAR           225.301
2044607.750

   SOIL WATER AT END OF YEAR             224.254
2035105.500

   SNOW WATER AT START OF YEAR             0.751
6811.184      2.54
```

```
   SNOW WATER AT END OF YEAR                    0.966
8763.388      3.27

   ANNUAL WATER BUDGET BALANCE                  0.0000
0.293      0.00


*****************************************************************
**************


*****************************************************************
**************

                    MONTHLY TOTALS (IN INCHES) FOR YEAR    7
 ---------------------------------------------------------------
---------------

                                   JAN/JUL FEB/AUG MAR/SEP APR/OCT
MAY/NOV JUN/DEC
                                   ------- ------- ------- -------
------- -------

 PRECIPITATION                      0.70    0.54    1.87    2.47
4.50    6.03
                                    5.57    2.56    2.03    3.90
1.25    0.79

 RUNOFF                             0.000   0.025   0.170   0.259
0.109   0.018
                                    0.146   0.014   0.003   0.066
0.043   0.001

 EVAPOTRANSPIRATION                 0.388   0.353   0.513   0.441
3.994   4.772
                                    3.621   2.258   1.167   1.883
0.375   0.368

 LATERAL DRAINAGE COLLECTED         0.2510  0.0576  0.1788  0.4906
0.7071  2.0983
   FROM LAYER  3                    2.2810  2.1095  0.6555  0.3588
1.5089  0.6306

 PERCOLATION/LEAKAGE THROUGH        0.0000  0.0000  0.0000  0.0001
0.0001  0.0003
   LAYER  5                         0.0003  0.0003  0.0001  0.0001
0.0002  0.0001
```

```
 ------------------------------------------------------------------
---------------
                    MONTHLY SUMMARIES FOR DAILY HEADS (INCHES)
 ------------------------------------------------------------------
---------------


 AVERAGE DAILY HEAD ON              0.476   0.121   0.339   0.962
1.342   4.116
   TOP OF LAYER  4                  4.330   4.005   1.286   0.681
2.960   1.197

 STD. DEVIATION OF DAILY            0.196   0.045   0.408   0.087
0.364   0.778
   HEAD ON TOP OF LAYER  4          0.477   0.853   0.511   0.346
0.594   0.492


*****************************************************************
**************


*****************************************************************
**************

                           ANNUAL TOTALS FOR YEAR    7
 ------------------------------------------------------------------
---------------
                                          INCHES          CU.
FEET     PERCENT
                                         --------
----------    -------
   PRECIPITATION                           32.21
292305.812    100.00

   RUNOFF                                   0.853
7743.480      2.65

   EVAPOTRANSPIRATION                      20.134
182719.375     62.51

   DRAINAGE COLLECTED FROM LAYER  3        11.3278
102799.648     35.17

   PERC./LEAKAGE THROUGH LAYER  5           0.001691
15.349      0.01

   AVG. HEAD ON TOP OF LAYER  4             1.8181
```

```
   CHANGE IN WATER STORAGE                    -0.107          -
972.006     -0.33

   SOIL WATER AT START OF YEAR               224.254
2035105.500

   SOIL WATER AT END OF YEAR                 224.778
2039860.870

   SNOW WATER AT START OF YEAR                 0.966
8763.388      3.00

   SNOW WATER AT END OF YEAR                   0.335
3035.925      1.04

   ANNUAL WATER BUDGET BALANCE                 0.0000          -
0.037      0.00

*****************************************************************
**************
```

```
*****************************************************************
**************

                    MONTHLY TOTALS (IN INCHES) FOR YEAR    8
 ---------------------------------------------------------------
---------------

                                  JAN/JUL FEB/AUG MAR/SEP APR/OCT
MAY/NOV JUN/DEC
                                  ------- ------- ------- -------
------- -------

 PRECIPITATION                     0.84    0.33    2.47    1.25
2.67    4.55
                                   4.53    4.01    2.82    1.78
0.85    1.35

 RUNOFF                            0.004   0.000   0.220   0.121
0.046   0.010
                                   0.024   0.016   0.002   0.002
0.001   0.000

 EVAPOTRANSPIRATION                0.632   0.674   0.461   0.044
```

```
3.039   4.815
                                        3.057   3.821   2.460   1.861
0.771   0.336

 LATERAL DRAINAGE COLLECTED             0.1518  0.0354  0.1730  0.6819
1.2150  1.4114
   FROM LAYER  3                        0.4584  0.6832  0.4472  0.3365
0.1025  0.0282

 PERCOLATION/LEAKAGE THROUGH            0.0000  0.0000  0.0000  0.0001
0.0002  0.0002
   LAYER  5                             0.0001  0.0001  0.0001  0.0001
0.0000  0.0000


 ------------------------------------------------------------------
---------------
                    MONTHLY SUMMARIES FOR DAILY HEADS (INCHES)
 ------------------------------------------------------------------
---------------


 AVERAGE DAILY HEAD ON                  0.288   0.072   0.328   1.338
2.307   2.769
   TOP OF LAYER  4                      0.870   1.297   0.877   0.639
0.201   0.053

 STD. DEVIATION OF DAILY                0.118   0.028   0.333   0.409
0.699   0.791
   HEAD ON TOP OF LAYER  4              0.350   0.499   0.277   0.152
0.077   0.022


*****************************************************************
**************



*****************************************************************
**************

                           ANNUAL TOTALS FOR YEAR    8
 ------------------------------------------------------------------
---------------
                                          INCHES          CU.
FEET     PERCENT
                                         --------
----------    -------
   PRECIPITATION                          27.45
249108.750    100.00
```

```
   RUNOFF                                          0.446
4051.660      1.63

   EVAPOTRANSPIRATION                             21.971
199386.062     80.04

   DRAINAGE COLLECTED FROM LAYER  3                5.7244
51949.078     20.85

   PERC./LEAKAGE THROUGH LAYER  5                  0.000901
8.178      0.00

   AVG. HEAD ON TOP OF LAYER  4                    0.9199

   CHANGE IN WATER STORAGE                        -0.693          -
6286.205     -2.52

   SOIL WATER AT START OF YEAR                   224.778
2039860.870

   SOIL WATER AT END OF YEAR                     223.406
2027406.000

   SNOW WATER AT START OF YEAR                     0.335
3035.925      1.22

   SNOW WATER AT END OF YEAR                       1.014
9204.581      3.70

   ANNUAL WATER BUDGET BALANCE                     0.0000           -
0.023      0.00


*****************************************************************
**************


*****************************************************************
**************

                    MONTHLY TOTALS (IN INCHES) FOR YEAR    9
 ---------------------------------------------------------------
---------------

                                   JAN/JUL FEB/AUG MAR/SEP APR/OCT
MAY/NOV JUN/DEC
                                   ------- ------- ------- -------
```

```
------- -------

 PRECIPITATION                      2.37    0.35    2.02    2.08
3.03    3.57
                                    2.57    2.42    3.75    1.03
2.53    2.17

 RUNOFF                             0.000   0.000   0.244   0.320
0.009   0.049
                                    0.013   0.000   0.008   0.001
0.003   0.000

 EVAPOTRANSPIRATION                 0.413   0.392   0.426   0.262
3.138   2.737
                                    2.526   1.560   2.665   2.195
0.756   0.375

 LATERAL DRAINAGE COLLECTED         0.0068  0.0016  0.0005  0.3212
1.2991  2.5052
   FROM LAYER  3                    1.9975  0.6423  0.1562  0.4807
0.3862  0.3775

 PERCOLATION/LEAKAGE THROUGH        0.0000  0.0000  0.0000  0.0001
0.0002  0.0004
   LAYER  5                         0.0003  0.0001  0.0000  0.0001
0.0001  0.0001


 ------------------------------------------------------------------
---------------
                     MONTHLY SUMMARIES FOR DAILY HEADS (INCHES)
 ------------------------------------------------------------------
---------------


 AVERAGE DAILY HEAD ON              0.013   0.003   0.001   0.630
2.466   4.914
   TOP OF LAYER  4                  3.792   1.219   0.306   0.913
0.758   0.717

 STD. DEVIATION OF DAILY            0.005   0.001   0.000   0.559
0.783   0.383
   HEAD ON TOP OF LAYER  4          0.687   0.501   0.113   0.523
0.192   0.203


*****************************************************************
**************
```

```
*****************************************************************
**************

                    ANNUAL TOTALS FOR YEAR     9
 ---------------------------------------------------------------
---------------
                                          INCHES          CU.
FEET      PERCENT
                                         --------
----------     -------
   PRECIPITATION                          27.89
253101.797     100.00

   RUNOFF                                  0.646
5864.776       2.32

   EVAPOTRANSPIRATION                     17.444
158302.187      62.54

   DRAINAGE COLLECTED FROM LAYER  3        8.1747
74185.086      29.31

   PERC./LEAKAGE THROUGH LAYER  5          0.001226
11.129       0.00

   AVG. HEAD ON TOP OF LAYER  4            1.3110

   CHANGE IN WATER STORAGE                 1.624
14738.597       5.82

   SOIL WATER AT START OF YEAR            223.406
2027406.000

   SOIL WATER AT END OF YEAR              223.994
2032743.250

   SNOW WATER AT START OF YEAR             1.014
9204.581       3.64

   SNOW WATER AT END OF YEAR               2.050
18605.994       7.35

   ANNUAL WATER BUDGET BALANCE             0.0000
0.015       0.00

*****************************************************************
**************
```

```
*****************************************************************
**************

                    MONTHLY TOTALS (IN INCHES) FOR YEAR   10
 ---------------------------------------------------------------
---------------

                                    JAN/JUL FEB/AUG MAR/SEP APR/OCT
MAY/NOV JUN/DEC
                                    ------- ------- ------- -------
------- -------

 PRECIPITATION                       1.23    0.49    2.43    2.43
1.99    2.97
                                     1.98    6.68    3.82    2.35
1.16    1.17

 RUNOFF                              0.000   0.018   0.309   0.323
0.059   0.014
                                     0.003   0.036   0.029   0.044
0.009   0.000

 EVAPOTRANSPIRATION                  0.354   0.465   0.587   0.313
2.157   3.141
                                     1.520   3.974   2.896   1.778
0.390   0.324

 LATERAL DRAINAGE COLLECTED          0.1043  0.0239  0.0631  0.9186
1.3247  2.4135
   FROM LAYER  3                     1.5977  0.4657  1.0296  1.8160
1.2541  0.3235

 PERCOLATION/LEAKAGE THROUGH         0.0000  0.0000  0.0000  0.0001
0.0002  0.0003
   LAYER  5                          0.0002  0.0001  0.0002  0.0003
0.0002  0.0001


 ---------------------------------------------------------------
---------------
                    MONTHLY SUMMARIES FOR DAILY HEADS (INCHES)
 ---------------------------------------------------------------
---------------


 AVERAGE DAILY HEAD ON               0.198   0.050   0.120   1.802
2.515   4.735
   TOP OF LAYER  4                   3.033   0.884   2.020   3.447
2.460   0.614
```

```
 STD. DEVIATION OF DAILY          0.081   0.019   0.166   0.424
0.458   0.474
   HEAD ON TOP OF LAYER  4        1.193   0.203   0.550   0.315
0.949   0.252


*****************************************************************
**************


*****************************************************************
**************

                          ANNUAL TOTALS FOR YEAR   10
 ---------------------------------------------------------------
---------------
                                          INCHES          CU.
FEET     PERCENT
                                         --------
----------    -------
   PRECIPITATION                          28.70
260452.547    100.00

   RUNOFF                                  0.843
7653.105      2.94

   EVAPOTRANSPIRATION                     17.899
162432.844     62.37

   DRAINAGE COLLECTED FROM LAYER  3       11.3347
102862.477     39.49

   PERC./LEAKAGE THROUGH LAYER  5          0.001690
15.339      0.01

   AVG. HEAD ON TOP OF LAYER  4            1.8232

   CHANGE IN WATER STORAGE                -1.379        -
12511.222     -4.80

   SOIL WATER AT START OF YEAR           223.994
2032743.250

   SOIL WATER AT END OF YEAR             223.819
2031161.750

   SNOW WATER AT START OF YEAR             2.050
18605.994      7.14
```

```
   SNOW WATER AT END OF YEAR                    0.846
7676.278      2.95

   ANNUAL WATER BUDGET BALANCE                  0.0000
0.003      0.00


*****************************************************************
**************
```

```
*****************************************************************
**************

          AVERAGE MONTHLY VALUES IN INCHES FOR YEARS    1 THROUGH
10
 ---------------------------------------------------------------
---------------

                              JAN/JUL  FEB/AUG  MAR/SEP  APR/OCT
MAY/NOV  JUN/DEC
                              -------  -------  -------  -------
-------  -------
   PRECIPITATION
   -------------
     TOTALS                     1.09     0.72     1.81     2.15
3.52     4.53
                                3.72     3.43     3.13     1.54
1.61     1.47

     STD. DEVIATIONS            0.54     0.33     0.54     1.22
1.36     2.13
                                1.39     1.52     0.69     0.96
0.99     0.61

   RUNOFF
   ------
     TOTALS                     0.000    0.004    0.217    0.261
0.063    0.046
                                0.046    0.023    0.010    0.011
0.013    0.004

     STD. DEVIATIONS            0.001    0.009    0.128    0.104
0.039    0.072
                                0.046    0.022    0.010    0.023
0.018    0.013
```

```
   EVAPOTRANSPIRATION
   ------------------
     TOTALS                  0.416    0.485    0.496    0.333
3.290    3.642
                             3.068    2.656    2.511    1.362
0.710    0.387

     STD. DEVIATIONS         0.101    0.107    0.084    0.250
0.933    1.154
                             1.021    1.260    0.607    0.578
0.288    0.060

   LATERAL DRAINAGE COLLECTED FROM LAYER  3
   ----------------------------------------
     TOTALS                  0.0709   0.0163   0.0774   0.5581
1.0979   2.0218
                             1.6020   1.1778   0.8144   0.5948
0.4434   0.2614

     STD. DEVIATIONS         0.0823   0.0190   0.0832   0.2842
0.2841   0.4055
                             0.6834   0.8155   0.5937   0.4496
0.5254   0.3259

   PERCOLATION/LEAKAGE THROUGH LAYER  5
   -------------------------------------
     TOTALS                  0.0000   0.0000   0.0000   0.0001
0.0002   0.0003
                             0.0002   0.0002   0.0001   0.0001
0.0001   0.0000

     STD. DEVIATIONS         0.0000   0.0000   0.0000   0.0000
0.0000   0.0001
                             0.0001   0.0001   0.0001   0.0001
0.0001   0.0000


 ------------------------------------------------------------------
---------------
                AVERAGES OF MONTHLY AVERAGED DAILY HEADS (INCHES)
 ------------------------------------------------------------------
---------------


   DAILY AVERAGE HEAD ON TOP OF LAYER  4
   -------------------------------------
     AVERAGES                0.1346   0.0340   0.1470   1.0948
2.0842   3.9661
                             3.0412   2.2360   1.5976   1.1292
0.8698   0.4962

     STD. DEVIATIONS         0.1563   0.0396   0.1579   0.5575
```

```
0.5394   0.7954
                                 1.2974   1.5482   1.1646   0.8536
1.0307   0.6187

*****************************************************************
**************


*****************************************************************
**************

      AVERAGE ANNUAL TOTALS & (STD. DEVIATIONS) FOR YEARS    1
THROUGH   10
 ---------------------------------------------------------------
---------------
                                          INCHES            CU. FEET
PERCENT
                                   -------------------
-------------   ---------
  PRECIPITATION                    28.72    (   2.922)     260652.2
100.00

  RUNOFF                            0.699   (  0.1973)
6344.98      2.434

  EVAPOTRANSPIRATION               19.358   (  2.0991)
175672.48     67.397

  LATERAL DRAINAGE COLLECTED        8.73629 (  2.44465)
79281.844   30.41672
    FROM LAYER  3

  PERCOLATION/LEAKAGE THROUGH       0.00131 (  0.00034)
11.916     0.00457
    LAYER  5

  AVERAGE HEAD ON TOP               1.403 (    0.392)
    OF LAYER  4

  CHANGE IN WATER STORAGE          -0.073   (  0.9879)       -
659.05     -0.253

*****************************************************************
**************
```

```
*****************************************************************
*************

                 PEAK DAILY VALUES FOR YEARS    1 THROUGH   10
    ------------------------------------------------------------
-----------
                                                  (INCHES)
(CU. FT.)
                                                 ----------
-------------
       PRECIPITATION                               3.44
31218.000

       RUNOFF                                      0.198
1794.4193

       DRAINAGE COLLECTED FROM LAYER  3            0.09837
892.69202

       PERCOLATION/LEAKAGE THROUGH LAYER  5        0.000014
0.12465

       AVERAGE HEAD ON TOP OF LAYER  4             5.789

       MAXIMUM HEAD ON TOP OF LAYER  4             8.152

       LOCATION OF MAXIMUM HEAD IN LAYER  3
             (DISTANCE FROM DRAIN)                29.5 FEET

       SNOW WATER                                  4.52
40991.6602


       MAXIMUM VEG. SOIL WATER (VOL/VOL)                    0.4630

       MINIMUM VEG. SOIL WATER (VOL/VOL)                    0.1160

        ***  Maximum heads are computed using McEnroe's
equations.  ***

             Reference:  Maximum Saturated Depth over Landfill
Liner
                         by Bruce M. McEnroe, University of
Kansas
                         ASCE Journal of Environmental
Engineering
                         Vol. 119, No. 2, March 1993, pp. 262-
270.
```

****
****

****
****

FINAL WATER STORAGE AT END OF YEAR 10

LAYER	(INCHES)	(VOL/VOL)
1	2.6889	0.2241
2	210.2400	0.2920
3	0.6425	0.0535
4	0.0000	0.0000
5	10.2480	0.4270
SNOW WATER	0.846	

****
****

****
****

```
******************************************************************
*************

******************************************************************
*************
 **
**
 **
**
 **                HYDROLOGIC EVALUATION OF LANDFILL PERFORMANCE
**
 **                  HELP MODEL VERSION 3.07  (1 NOVEMBER 1997)
**
 **                    DEVELOPED BY ENVIRONMENTAL LABORATORY
**
 **                      USAE WATERWAYS EXPERIMENT STATION
**
 **               FOR USEPA RISK REDUCTION ENGINEERING LABORATORY
**
 **
**
 **
**

******************************************************************
*************

******************************************************************
*************


 PRECIPITATION DATA FILE:     c:\download\Phase3.D4
 TEMPERATURE DATA FILE:       c:\download\Phase3.D7
 SOLAR RADIATION DATA FILE:   c:\download\Phase3.D13
 EVAPOTRANSPIRATION DATA:     c:\download\Phase3.D11
 SOIL AND DESIGN DATA FILE:   c:\download\Phase3.D10
 OUTPUT DATA FILE:            c:\download\Phase3.OUT


 TIME:  14:27     DATE:   5/30/2013


******************************************************************
*************
```

TITLE: Regional Landfill Phase 3

****
****

NOTE: INITIAL MOISTURE CONTENT OF THE LAYERS AND SNOW WATER WERE
COMPUTED AS NEARLY STEADY-STATE VALUES BY THE PROGRAM.

LAYER 1

TYPE 1 - VERTICAL PERCOLATION LAYER
MATERIAL TEXTURE NUMBER 8

THICKNESS	=	12.00	INCHES
POROSITY	=	0.4630	VOL/VOL
FIELD CAPACITY	=	0.2320	VOL/VOL
WILTING POINT	=	0.1160	VOL/VOL
INITIAL SOIL WATER CONTENT	=	0.2715	VOL/VOL
EFFECTIVE SAT. HYD. COND.	=	0.369999994000E-03	CM/SEC

LAYER 2

TYPE 1 - VERTICAL PERCOLATION LAYER
MATERIAL TEXTURE NUMBER 18

THICKNESS	=	680.00	INCHES
POROSITY	=	0.6710	VOL/VOL
FIELD CAPACITY	=	0.2920	VOL/VOL
WILTING POINT	=	0.0770	VOL/VOL
INITIAL SOIL WATER CONTENT	=	0.2920	VOL/VOL
EFFECTIVE SAT. HYD. COND.	=	0.100000005000E-02	CM/SEC

LAYER 3

TYPE 2 - LATERAL DRAINAGE LAYER
MATERIAL TEXTURE NUMBER 1

```
THICKNESS                    =     12.00   INCHES
POROSITY                     =      0.4170 VOL/VOL
FIELD CAPACITY               =      0.0450 VOL/VOL
WILTING POINT                =      0.0180 VOL/VOL
INITIAL SOIL WATER CONTENT   =      0.0543 VOL/VOL
EFFECTIVE SAT. HYD. COND.    =  0.999999978000E-02
CM/SEC
SLOPE                        =      3.00   PERCENT
DRAINAGE LENGTH              =    100.0    FEET
```

LAYER 4

TYPE 4 - FLEXIBLE MEMBRANE LINER
MATERIAL TEXTURE NUMBER 35

```
THICKNESS                    =      0.06   INCHES
POROSITY                     =      0.0000 VOL/VOL
FIELD CAPACITY               =      0.0000 VOL/VOL
WILTING POINT                =      0.0000 VOL/VOL
INITIAL SOIL WATER CONTENT   =      0.0000 VOL/VOL
EFFECTIVE SAT. HYD. COND.    =  0.199999996000E-12
CM/SEC
FML PINHOLE DENSITY          =      1.00   HOLES/ACRE
FML INSTALLATION DEFECTS     =      4.00   HOLES/ACRE
FML PLACEMENT QUALITY        =  3 - GOOD
```

LAYER 5

TYPE 3 - BARRIER SOIL LINER
MATERIAL TEXTURE NUMBER 16

```
THICKNESS                    =     24.00   INCHES
POROSITY                     =      0.4270 VOL/VOL
FIELD CAPACITY               =      0.4180 VOL/VOL
WILTING POINT                =      0.3670 VOL/VOL
INITIAL SOIL WATER CONTENT   =      0.4270 VOL/VOL
EFFECTIVE SAT. HYD. COND.    =  0.100000001000E-06
CM/SEC
```

GENERAL DESIGN AND EVAPORATIVE ZONE DATA

NOTE: SCS RUNOFF CURVE NUMBER WAS COMPUTED FROM DEFAULT
SOIL DATA BASE USING SOIL TEXTURE # 8 WITH BARE
GROUND CONDITIONS, A SURFACE SLOPE OF 10.% AND
A SLOPE LENGTH OF 200. FEET.

SCS RUNOFF CURVE NUMBER	=	91.00	
FRACTION OF AREA ALLOWING RUNOFF	=	0.0	PERCENT
AREA PROJECTED ON HORIZONTAL PLANE	=	2.800	ACRES
EVAPORATIVE ZONE DEPTH	=	8.0	INCHES
INITIAL WATER IN EVAPORATIVE ZONE	=	2.330	INCHES
UPPER LIMIT OF EVAPORATIVE STORAGE	=	3.704	INCHES
LOWER LIMIT OF EVAPORATIVE STORAGE	=	0.928	INCHES
INITIAL SNOW WATER	=	0.998	INCHES
INITIAL WATER IN LAYER MATERIALS	=	212.718	INCHES
TOTAL INITIAL WATER	=	213.715	INCHES
TOTAL SUBSURFACE INFLOW	=	0.00	INCHES/YEAR

EVAPOTRANSPIRATION AND WEATHER DATA

NOTE: EVAPOTRANSPIRATION DATA WAS OBTAINED FROM
DULUTH MINNESOTA

STATION LATITUDE	=	46.50	DEGREES
MAXIMUM LEAF AREA INDEX	=	0.00	
START OF GROWING SEASON (JULIAN DATE)	=	144	
END OF GROWING SEASON (JULIAN DATE)	=	261	
EVAPORATIVE ZONE DEPTH	=	8.0	INCHES
AVERAGE ANNUAL WIND SPEED	=	11.20	MPH
AVERAGE 1ST QUARTER RELATIVE HUMIDITY	=	70.00	%
AVERAGE 2ND QUARTER RELATIVE HUMIDITY	=	66.00	%
AVERAGE 3RD QUARTER RELATIVE HUMIDITY	=	74.00	%
AVERAGE 4TH QUARTER RELATIVE HUMIDITY	=	74.00	%

NOTE: PRECIPITATION DATA WAS SYNTHETICALLY GENERATED USING
COEFFICIENTS FOR DULUTH MINNESOTA

NORMAL MEAN MONTHLY PRECIPITATION (INCHES)

JAN/JUL	FEB/AUG	MAR/SEP	APR/OCT	MAY/NOV	JUN/DEC
1.20	0.90	1.78	2.16	3.15	3.96
3.96	4.12	3.26	2.21	1.69	1.29

NOTE: TEMPERATURE DATA WAS SYNTHETICALLY GENERATED USING
COEFFICIENTS FOR DULUTH MINNESOTA

NORMAL MEAN MONTHLY TEMPERATURE (DEGREES FAHRENHEIT)

JAN/JUL	FEB/AUG	MAR/SEP	APR/OCT	MAY/NOV	JUN/DEC
6.30	12.00	22.90	38.30	50.30	59.40
65.30	63.20	54.00	44.20	28.20	13.80

NOTE: SOLAR RADIATION DATA WAS SYNTHETICALLY GENERATED USING
COEFFICIENTS FOR DULUTH MINNESOTA
AND STATION LATITUDE = 46.50 DEGREES

****

MONTHLY TOTALS (IN INCHES) FOR YEAR 1

	JAN/JUL	FEB/AUG	MAR/SEP	APR/OCT	MAY/NOV	JUN/DEC

```
------- -------

 PRECIPITATION                      0.51    0.83    1.24    1.02
1.64    3.93
                                    3.41    3.48    2.98    0.90
2.99    0.77

 RUNOFF                             0.000   0.000   0.000   0.000
0.000   0.000
                                    0.000   0.000   0.000   0.000
0.000   0.000

 EVAPOTRANSPIRATION                 0.510   0.500   0.426   0.173
1.782   4.304
                                    2.107   4.433   2.408   0.633
1.035   0.478

 LATERAL DRAINAGE COLLECTED         0.0846  0.0194  0.0742  0.4957
0.8166  1.5295
   FROM LAYER  3                    0.5710  0.3619  0.2378  0.4491
0.1171  0.1552

 PERCOLATION/LEAKAGE THROUGH        0.0000  0.0000  0.0000  0.0001
0.0001  0.0002
   LAYER  5                         0.0001  0.0001  0.0000  0.0001
0.0000  0.0000


 ------------------------------------------------------------------
---------------
                    MONTHLY SUMMARIES FOR DAILY HEADS (INCHES)
 ------------------------------------------------------------------
---------------


 AVERAGE DAILY HEAD ON              0.161   0.041   0.141   0.972
1.550   3.000
   TOP OF LAYER  4                  1.084   0.687   0.466   0.853
0.230   0.295

 STD. DEVIATION OF DAILY            0.066   0.015   0.208   0.283
0.745   0.740
   HEAD ON TOP OF LAYER  4          0.411   0.122   0.152   0.271
0.091   0.125


*****************************************************************
**************
```

```
*****************************************************************
**************

                          ANNUAL TOTALS FOR YEAR    1
 ---------------------------------------------------------------
---------------
                                          INCHES          CU.
FEET     PERCENT
                                         --------
----------    -------
   PRECIPITATION                          23.70
240886.828    100.00

   RUNOFF                                  0.000
0.000      0.00

   EVAPOTRANSPIRATION                     18.788
190964.109     79.28

   DRAINAGE COLLECTED FROM LAYER  3        4.9121
49926.215     20.73

   PERC./LEAKAGE THROUGH LAYER  5          0.000783
7.955      0.00

   AVG. HEAD ON TOP OF LAYER  4            0.7900

   CHANGE IN WATER STORAGE                -0.001          -
11.632      0.00

   SOIL WATER AT START OF YEAR           212.718
2162063.500

   SOIL WATER AT END OF YEAR             212.717
2162051.750

   SNOW WATER AT START OF YEAR             0.998
10138.972      4.21

   SNOW WATER AT END OF YEAR               0.998
10138.972      4.21

   ANNUAL WATER BUDGET BALANCE             0.0000
0.187      0.00

*****************************************************************
**************
```

```
*****************************************************************
**************

                    MONTHLY TOTALS (IN INCHES) FOR YEAR    2
 ---------------------------------------------------------------
---------------

                                      JAN/JUL FEB/AUG MAR/SEP APR/OCT
MAY/NOV JUN/DEC
                                      ------- ------- ------- -------
------- -------

 PRECIPITATION                         0.65    0.95    1.83    5.02
4.48    5.12
                                       3.67    1.18    4.03    1.03
0.50    2.51

 RUNOFF                                0.000   0.000   0.000   0.000
0.000   0.000
                                       0.000   0.000   0.000   0.000
0.000   0.000

 EVAPOTRANSPIRATION                    0.386   0.428   0.462   0.922
3.889   3.426
                                       3.614   0.363   3.058   1.389
0.860   0.360

 LATERAL DRAINAGE COLLECTED            0.0838  0.0192  0.0828  0.6632
1.1736  1.8992
   FROM LAYER  3                       2.5230  2.7382  1.8212  0.6418
0.1555  0.0398

 PERCOLATION/LEAKAGE THROUGH           0.0000  0.0000  0.0000  0.0001
0.0002  0.0003
   LAYER  5                            0.0004  0.0004  0.0003  0.0001
0.0000  0.0000


 ---------------------------------------------------------------
---------------
                    MONTHLY SUMMARIES FOR DAILY HEADS (INCHES)
 ---------------------------------------------------------------
---------------


 AVERAGE DAILY HEAD ON                 0.159   0.040   0.157   1.301
2.228   3.726
   TOP OF LAYER  4                     4.790   5.198   3.573   1.218
0.305   0.076
```

```
 STD. DEVIATION OF DAILY          0.065   0.015   0.173   0.315
0.767   0.531
   HEAD ON TOP OF LAYER  4        0.344   0.329   0.677   0.491
0.122   0.031

*****************************************************************
**************


*****************************************************************
**************

                            ANNUAL TOTALS FOR YEAR    2
 ---------------------------------------------------------------
---------------
                                          INCHES          CU.
FEET     PERCENT
                                         --------
----------    -------
   PRECIPITATION                          30.97
314779.094    100.00

   RUNOFF                                  0.000
0.000      0.00

   EVAPOTRANSPIRATION                     19.156
194702.125     61.85

   DRAINAGE COLLECTED FROM LAYER  3       11.8413
120354.633     38.23

   PERC./LEAKAGE THROUGH LAYER  5          0.001737
17.650      0.01

   AVG. HEAD ON TOP OF LAYER  4            1.8975

   CHANGE IN WATER STORAGE                -0.029          -
295.381     -0.09

   SOIL WATER AT START OF YEAR           212.717
2162051.750

   SOIL WATER AT END OF YEAR             211.902
2153772.750

   SNOW WATER AT START OF YEAR             0.998
10138.972      3.22
```

```
   SNOW WATER AT END OF YEAR                    1.783
18122.623      5.76

   ANNUAL WATER BUDGET BALANCE                  0.0000
0.080      0.00


*****************************************************************
**************


*****************************************************************
**************

                    MONTHLY TOTALS (IN INCHES) FOR YEAR    3
 ---------------------------------------------------------------
---------------

                                      JAN/JUL FEB/AUG MAR/SEP APR/OCT
MAY/NOV JUN/DEC
                                      ------- ------- ------- -------
------- -------

 PRECIPITATION                         1.30    0.56    0.82    0.74
6.23    9.47
                                       5.20    2.18    2.92    1.15
1.01    1.18

 RUNOFF                                0.000   0.000   0.000   0.000
0.000   0.000
                                       0.000   0.000   0.000   0.000
0.000   0.000

 EVAPOTRANSPIRATION                    0.485   0.571   0.670   0.417
4.904   5.226
                                       4.680   1.786   2.732   1.327
0.495   0.358

 LATERAL DRAINAGE COLLECTED            0.0096  0.0022  0.0006  0.1243
1.0053  1.8961
   FROM LAYER  3                       1.4983  2.2546  2.3831  0.8118
0.1926  0.0493

 PERCOLATION/LEAKAGE THROUGH           0.0000  0.0000  0.0000  0.0000
0.0002  0.0003
   LAYER  5                            0.0002  0.0003  0.0003  0.0001
0.0000  0.0000
```

```
-----------------------------------------------------------------
---------------
                    MONTHLY SUMMARIES FOR DAILY HEADS (INCHES)
-----------------------------------------------------------------
---------------

 AVERAGE DAILY HEAD ON              0.018   0.005   0.001   0.244
1.909   3.720
   TOP OF LAYER  4                  2.844   4.280   4.675   1.541
0.378   0.094

 STD. DEVIATION OF DAILY            0.007   0.002   0.000   0.425
0.606   0.408
   HEAD ON TOP OF LAYER  4          0.313   0.712   0.851   0.632
0.151   0.038

*****************************************************************
**************


*****************************************************************
**************

                           ANNUAL TOTALS FOR YEAR     3
-----------------------------------------------------------------
---------------
                                            INCHES          CU.
FEET     PERCENT
                                           --------
----------    -------
   PRECIPITATION                             32.76
332972.687    100.00

   RUNOFF                                     0.000
0.000      0.00

   EVAPOTRANSPIRATION                        23.651
240387.125     72.19

   DRAINAGE COLLECTED FROM LAYER  3         10.2278
103955.430     31.22

   PERC./LEAKAGE THROUGH LAYER  5            0.001504
15.284      0.00

   AVG. HEAD ON TOP OF LAYER  4              1.6423
```

CHANGE IN WATER STORAGE -1.120 -
11385.213 -3.42

SOIL WATER AT START OF YEAR 211.902
2153772.750

SOIL WATER AT END OF YEAR 211.743
2152154.750

SNOW WATER AT START OF YEAR 1.783
18122.623 5.44

SNOW WATER AT END OF YEAR 0.822
8355.312 2.51

ANNUAL WATER BUDGET BALANCE 0.0000
0.073 0.00

****
****

****
****

MONTHLY TOTALS (IN INCHES) FOR YEAR 4

	JAN/JUL	FEB/AUG	MAR/SEP	APR/OCT	MAY/NOV	JUN/DEC
PRECIPITATION	1.30	0.82	1.74	1.50	3.81	3.92
	1.36	4.38	2.44	0.90	0.60	2.09
RUNOFF	0.000	0.000	0.000	0.000	0.000	0.000
	0.000	0.000	0.000	0.000	0.000	0.000
EVAPOTRANSPIRATION	0.286	0.605	0.395	0.103		

```
3.360   2.989
                                        1.955   3.561   1.969   0.619
0.881   0.397

 LATERAL DRAINAGE COLLECTED             0.0119  0.0028  0.0008  0.3210
1.3060  2.2809
   FROM LAYER  3                        1.6035  0.6404  0.5050  0.2800
0.0693  0.0177

 PERCOLATION/LEAKAGE THROUGH            0.0000  0.0000  0.0000  0.0001
0.0002  0.0003
   LAYER  5                             0.0002  0.0001  0.0001  0.0000
0.0000  0.0000


 ---------------------------------------------------------------------
---------------
                     MONTHLY SUMMARIES FOR DAILY HEADS (INCHES)
 ---------------------------------------------------------------------
---------------


 AVERAGE DAILY HEAD ON                  0.023   0.006   0.001   0.630
2.479   4.474
   TOP OF LAYER  4                      3.044   1.216   0.991   0.532
0.136   0.034

 STD. DEVIATION OF DAILY                0.009   0.002   0.001   0.817
0.297   0.593
   HEAD ON TOP OF LAYER  4              1.032   0.336   0.245   0.191
0.054   0.014


*********************************************************************
**************


*********************************************************************
**************

                          ANNUAL TOTALS FOR YEAR     4
 ---------------------------------------------------------------------
---------------
                                          INCHES          CU.
FEET     PERCENT
                                         --------
----------    -------
   PRECIPITATION                          24.86
252677.156    100.00
```

```
   RUNOFF                                          0.000
0.000      0.00

   EVAPOTRANSPIRATION                             17.121
174013.859     68.87

   DRAINAGE COLLECTED FROM LAYER  3                7.0394
71548.633     28.32

   PERC./LEAKAGE THROUGH LAYER  5                  0.001059
10.768      0.00

   AVG. HEAD ON TOP OF LAYER  4                    1.1304

   CHANGE IN WATER STORAGE                         0.699
7103.761      2.81

   SOIL WATER AT START OF YEAR                   211.743
2152154.750

   SOIL WATER AT END OF YEAR                     211.471
2149388.750

   SNOW WATER AT START OF YEAR                     0.822
8355.312      3.31

   SNOW WATER AT END OF YEAR                       1.793
18225.107      7.21

   ANNUAL WATER BUDGET BALANCE                     0.0000
0.149      0.00

*****************************************************************
**************

*****************************************************************
**************

                    MONTHLY TOTALS (IN INCHES) FOR YEAR    5
 ---------------------------------------------------------------
---------------

                                   JAN/JUL FEB/AUG MAR/SEP APR/OCT
MAY/NOV JUN/DEC
                                   ------- ------- ------- -------
```

```
------- -------

 PRECIPITATION                      1.17    1.36    1.38    2.26
2.94    4.38
                                    4.36    4.15    2.62    0.85
2.04    1.60

 RUNOFF                             0.000   0.000   0.000   0.000
0.000   0.000
                                    0.000   0.000   0.000   0.000
0.000   0.000

 EVAPOTRANSPIRATION                 0.322   0.358   0.536   0.451
2.702   3.542
                                    4.048   2.352   2.601   1.090
0.325   0.369

 LATERAL DRAINAGE COLLECTED         0.0043  0.0010  0.2206  1.2646
0.9677  2.0057
   FROM LAYER  3                    2.0864  1.3591  0.8845  0.3338
0.0811  0.0207

 PERCOLATION/LEAKAGE THROUGH        0.0000  0.0000  0.0000  0.0002
0.0001  0.0003
   LAYER  5                         0.0003  0.0002  0.0001  0.0001
0.0000  0.0000


 ------------------------------------------------------------------
---------------
                     MONTHLY SUMMARIES FOR DAILY HEADS (INCHES)
 ------------------------------------------------------------------
---------------


 AVERAGE DAILY HEAD ON              0.008   0.002   0.419   2.481
1.837   3.935
   TOP OF LAYER  4                  3.961   2.580   1.735   0.634
0.159   0.039

 STD. DEVIATION OF DAILY            0.003   0.001   0.650   0.576
0.212   0.688
   HEAD ON TOP OF LAYER  4          0.384   0.437   0.562   0.241
0.063   0.016


*******************************************************************
**************
```

```
*****************************************************************
**************

                          ANNUAL TOTALS FOR YEAR     5
 ---------------------------------------------------------------
---------------
                                          INCHES          CU.
FEET     PERCENT
                                         --------
----------    -------
   PRECIPITATION                          29.11
295874.031    100.00

   RUNOFF                                  0.000
0.000      0.00

   EVAPOTRANSPIRATION                     18.696
190030.484     64.23

   DRAINAGE COLLECTED FROM LAYER  3        9.2295
93808.984     31.71

   PERC./LEAKAGE THROUGH LAYER  5          0.001378
14.011      0.00

   AVG. HEAD ON TOP OF LAYER  4            1.4825

   CHANGE IN WATER STORAGE                 1.183
12020.550      4.06

   SOIL WATER AT START OF YEAR           211.471
2149388.750

   SOIL WATER AT END OF YEAR             213.696
2172006.000

   SNOW WATER AT START OF YEAR             1.793
18225.107      6.16

   SNOW WATER AT END OF YEAR               0.751
7628.526      2.58

   ANNUAL WATER BUDGET BALANCE             0.0000
0.022      0.00

*****************************************************************
**************
```

```
*****************************************************************
**************

                    MONTHLY TOTALS (IN INCHES) FOR YEAR    6
 ---------------------------------------------------------------
---------------

                                    JAN/JUL FEB/AUG MAR/SEP APR/OCT
MAY/NOV JUN/DEC
                                    ------- ------- ------- -------
------- -------

 PRECIPITATION                       0.80    1.02    2.30    2.75
3.91    1.39
                                     4.52    3.27    3.87    1.54
3.17    1.03

 RUNOFF                              0.000   0.000   0.000   0.000
0.000   0.000
                                     0.000   0.000   0.000   0.000
0.000   0.000

 EVAPOTRANSPIRATION                  0.383   0.500   0.486   0.209
3.960   1.455
                                     3.509   2.590   3.378   0.720
1.182   0.510

 LATERAL DRAINAGE COLLECTED          0.0050  0.0011  0.0244  0.5789
1.5185  2.6554
   FROM LAYER  3                     2.5014  1.2017  0.8027  0.6617
0.6554  0.9839

 PERCOLATION/LEAKAGE THROUGH         0.0000  0.0000  0.0000  0.0001
0.0002  0.0004
   LAYER  5                          0.0004  0.0002  0.0001  0.0001
0.0001  0.0002


 ---------------------------------------------------------------
---------------
                    MONTHLY SUMMARIES FOR DAILY HEADS (INCHES)
 ---------------------------------------------------------------
---------------


 AVERAGE DAILY HEAD ON               0.009   0.002   0.046   1.136
2.883   5.209
   TOP OF LAYER  4                   4.749   2.281   1.575   1.256
1.286   1.868
```

```
 STD. DEVIATION OF DAILY          0.004   0.001   0.086   0.463
0.524   0.469
   HEAD ON TOP OF LAYER  4        1.131   0.458   0.443   0.509
0.854   0.666


*****************************************************************
**************


*****************************************************************
**************

                           ANNUAL TOTALS FOR YEAR    6
 ---------------------------------------------------------------
---------------
                                          INCHES          CU.
FEET     PERCENT
                                         --------
----------    -------
   PRECIPITATION                          29.57
300549.562    100.00

   RUNOFF                                  0.000
0.000      0.00

   EVAPOTRANSPIRATION                     18.885
191946.109     63.87

   DRAINAGE COLLECTED FROM LAYER  3       11.5901
117801.922     39.20

   PERC./LEAKAGE THROUGH LAYER  5          0.001714
17.419      0.01

   AVG. HEAD ON TOP OF LAYER  4            1.8583

   CHANGE IN WATER STORAGE                -0.907          -
9215.928     -3.07

   SOIL WATER AT START OF YEAR           213.696
2172006.000

   SOIL WATER AT END OF YEAR             212.574
2160603.500

   SNOW WATER AT START OF YEAR             0.751
7628.526      2.54
```

```
   SNOW WATER AT END OF YEAR                    0.966
9814.995      3.27

   ANNUAL WATER BUDGET BALANCE                  0.0000
0.023      0.00


*****************************************************************
**************


*****************************************************************
**************

                    MONTHLY TOTALS (IN INCHES) FOR YEAR    7
 ---------------------------------------------------------------
---------------

                                   JAN/JUL FEB/AUG MAR/SEP APR/OCT
MAY/NOV JUN/DEC
                                   ------- ------- ------- -------
------- -------

 PRECIPITATION                      0.70    0.54    1.87    2.47
4.50    6.03
                                    5.57    2.56    2.03    3.90
1.25    0.79

 RUNOFF                             0.000   0.000   0.000   0.000
0.000   0.000
                                    0.000   0.000   0.000   0.000
0.000   0.000

 EVAPOTRANSPIRATION                 0.388   0.353   0.513   0.441
3.993   4.755
                                    3.574   2.268   1.205   1.883
0.375   0.368

 LATERAL DRAINAGE COLLECTED         0.2510  0.0576  0.2011  0.6379
0.7476  2.1532
   FROM LAYER  3                    2.2808  2.3803  0.8499  0.3871
1.5353  0.6605

 PERCOLATION/LEAKAGE THROUGH        0.0000  0.0000  0.0000  0.0001
0.0001  0.0003
   LAYER  5                         0.0003  0.0003  0.0001  0.0001
0.0002  0.0001
```

```
-----------------------------------------------------------------
---------------
                    MONTHLY SUMMARIES FOR DAILY HEADS (INCHES)
-----------------------------------------------------------------
---------------


 AVERAGE DAILY HEAD ON            0.477   0.121   0.382   1.251
1.419   4.224
   TOP OF LAYER  4                4.330   4.519   1.667   0.735
3.012   1.254

 STD. DEVIATION OF DAILY          0.196   0.045   0.533   0.095
0.368   0.777
   HEAD ON TOP OF LAYER  4        0.539   0.575   0.664   0.318
0.609   0.515


*****************************************************************
**************


*****************************************************************
**************

                           ANNUAL TOTALS FOR YEAR     7
-----------------------------------------------------------------
---------------
                                            INCHES          CU.
FEET      PERCENT
                                           --------
----------    -------
   PRECIPITATION                             32.21
327382.500    100.00

   RUNOFF                                     0.000
0.000       0.00

   EVAPOTRANSPIRATION                        20.116
204462.016      62.45

   DRAINAGE COLLECTED FROM LAYER  3         12.1422
123412.836      37.70

   PERC./LEAKAGE THROUGH LAYER  5            0.001805
18.341       0.01

   AVG. HEAD ON TOP OF LAYER  4              1.9492
```

```
   CHANGE IN WATER STORAGE                    -0.050          -
510.780     -0.16

   SOIL WATER AT START OF YEAR               212.574
2160603.500

   SOIL WATER AT END OF YEAR                 213.155
2166507.500

   SNOW WATER AT START OF YEAR                 0.966
9814.995      3.00

   SNOW WATER AT END OF YEAR                   0.335
3400.236      1.04

   ANNUAL WATER BUDGET BALANCE                 0.0000
0.085      0.00

*****************************************************************
**************

*****************************************************************
**************

                    MONTHLY TOTALS (IN INCHES) FOR YEAR    8
 ---------------------------------------------------------------
---------------

                                  JAN/JUL FEB/AUG MAR/SEP APR/OCT
MAY/NOV JUN/DEC
                                  ------- ------- ------- -------
------- -------

 PRECIPITATION                     0.84    0.33    2.47    1.25
2.67    4.55
                                   4.53    4.01    2.82    1.78
0.85    1.35

 RUNOFF                            0.000   0.000   0.000   0.000
0.000   0.000
                                   0.000   0.000   0.000   0.000
0.000   0.000

 EVAPOTRANSPIRATION                0.632   0.674   0.461   0.044
```

```
3.004   4.816
                                    3.056   3.789   2.467   1.883
0.771   0.336

 LATERAL DRAINAGE COLLECTED         0.1590  0.0371  0.2092  0.8311
1.3114  1.5515
   FROM LAYER  3                    0.5056  0.6984  0.4961  0.3445
0.0953  0.0246

 PERCOLATION/LEAKAGE THROUGH        0.0000  0.0000  0.0000  0.0001
0.0002  0.0002
   LAYER  5                         0.0001  0.0001  0.0001  0.0001
0.0000  0.0000


 ---------------------------------------------------------------
---------------
                    MONTHLY SUMMARIES FOR DAILY HEADS (INCHES)
 ---------------------------------------------------------------
---------------


 AVERAGE DAILY HEAD ON              0.302   0.075   0.397   1.630
2.489   3.044
   TOP OF LAYER  4                  0.960   1.326   0.973   0.654
0.187   0.047

 STD. DEVIATION OF DAILY            0.124   0.029   0.506   0.418
0.686   0.826
   HEAD ON TOP OF LAYER  4          0.386   0.534   0.314   0.177
0.074   0.019


***************************************************************
**************



***************************************************************
**************

                           ANNUAL TOTALS FOR YEAR    8
 ---------------------------------------------------------------
---------------
                                          INCHES          CU.
FEET     PERCENT
                                         --------
----------    -------
   PRECIPITATION                           27.45
279001.812    100.00
```

```
   RUNOFF                                        0.000
0.000      0.00

   EVAPOTRANSPIRATION                           21.932
222917.094     79.90

   DRAINAGE COLLECTED FROM LAYER  3              6.2638
63664.777     22.82

   PERC./LEAKAGE THROUGH LAYER  5               0.000977
9.929      0.00

   AVG. HEAD ON TOP OF LAYER  4                  1.0070

   CHANGE IN WATER STORAGE                      -0.747          -
7589.880     -2.72

   SOIL WATER AT START OF YEAR                 213.155
2166507.500

   SOIL WATER AT END OF YEAR                   211.729
2152008.750

   SNOW WATER AT START OF YEAR                   0.335
3400.236      1.22

   SNOW WATER AT END OF YEAR                     1.014
10309.131      3.70

   ANNUAL WATER BUDGET BALANCE                   0.0000           -
0.113      0.00


*****************************************************************
**************


*****************************************************************
**************

                    MONTHLY TOTALS (IN INCHES) FOR YEAR    9
 ---------------------------------------------------------------
---------------

                                    JAN/JUL FEB/AUG MAR/SEP APR/OCT
MAY/NOV JUN/DEC
                                    ------- ------- ------- -------
```

```
------- -------

 PRECIPITATION                    2.37    0.35    2.02    2.08
3.03    3.57
                                  2.57    2.42    3.75    1.03
2.53    2.17

 RUNOFF                           0.000   0.000   0.000   0.000
0.000   0.000
                                  0.000   0.000   0.000   0.000
0.000   0.000

 EVAPOTRANSPIRATION               0.413   0.392   0.426   0.262
3.116   2.763
                                  2.551   1.560   2.742   2.192
0.760   0.375

 LATERAL DRAINAGE COLLECTED       0.0059  0.0014  0.0004  0.3276
1.3052  2.5708
   FROM LAYER  3                  2.2607  0.8449  0.2023  0.4689
0.3581  0.3723

 PERCOLATION/LEAKAGE THROUGH      0.0000  0.0000  0.0000  0.0001
0.0002  0.0004
   LAYER  5                       0.0003  0.0001  0.0000  0.0001
0.0001  0.0001


 ------------------------------------------------------------------
---------------
                    MONTHLY SUMMARIES FOR DAILY HEADS (INCHES)
 ------------------------------------------------------------------
---------------


 AVERAGE DAILY HEAD ON            0.011   0.003   0.001   0.643
2.478   5.043
   TOP OF LAYER  4                4.292   1.604   0.397   0.890
0.702   0.707

 STD. DEVIATION OF DAILY          0.005   0.001   0.000   0.541
0.815   0.398
   HEAD ON TOP OF LAYER  4        0.471   0.659   0.155   0.437
0.201   0.199


*****************************************************************
**************
```

```
*****************************************************************
**************

                          ANNUAL TOTALS FOR YEAR     9
 ---------------------------------------------------------------
---------------
                                          INCHES          CU.
FEET     PERCENT
                                         --------
----------    -------
   PRECIPITATION                          27.89
283474.000    100.00

   RUNOFF                                  0.000
0.000      0.00

   EVAPOTRANSPIRATION                     17.551
178384.344     62.93

   DRAINAGE COLLECTED FROM LAYER  3        8.7186
88615.844     31.26

   PERC./LEAKAGE THROUGH LAYER  5          0.001301
13.228      0.00

   AVG. HEAD ON TOP OF LAYER  4            1.3975

   CHANGE IN WATER STORAGE                 1.619
16460.391      5.81

   SOIL WATER AT START OF YEAR           211.729
2152008.750

   SOIL WATER AT END OF YEAR             212.312
2157939.500

   SNOW WATER AT START OF YEAR             1.014
10309.131      3.64

   SNOW WATER AT END OF YEAR               2.050
20838.713      7.35

   ANNUAL WATER BUDGET BALANCE             0.0000
0.211      0.00


*****************************************************************
**************
```

****
****

MONTHLY TOTALS (IN INCHES) FOR YEAR 10

	JAN/JUL	FEB/AUG	MAR/SEP	APR/OCT	MAY/NOV	JUN/DEC
PRECIPITATION	1.23	0.49	2.43	2.43	1.99	2.97
	1.98	6.68	3.82	2.35	1.16	1.17
RUNOFF	0.000	0.000	0.000	0.000	0.000	0.000
	0.000	0.000	0.000	0.000	0.000	0.000
EVAPOTRANSPIRATION	0.354	0.465	0.587	0.313	2.163	3.182
	1.731	3.964	2.931	1.789	0.389	0.324
LATERAL DRAINAGE COLLECTED	0.1031	0.0236	0.0522	0.8780	1.3130	2.4979
FROM LAYER 3	1.9212	0.5604	1.0711	1.8637	1.2631	0.3251
PERCOLATION/LEAKAGE THROUGH	0.0000	0.0000	0.0000	0.0001	0.0002	0.0004
LAYER 5	0.0003	0.0001	0.0002	0.0003	0.0002	0.0001

MONTHLY SUMMARIES FOR DAILY HEADS (INCHES)

AVERAGE DAILY HEAD ON	0.196	0.050	0.099	1.722	2.493	4.900
TOP OF LAYER 4	3.647	1.064	2.101	3.538	2.478	0.617

```
 STD. DEVIATION OF DAILY          0.080   0.019   0.142   0.420
0.512   0.510
   HEAD ON TOP OF LAYER  4        1.348   0.249   0.534   0.301
0.963   0.254


*****************************************************************
**************


*****************************************************************
**************

                          ANNUAL TOTALS FOR YEAR   10
 ---------------------------------------------------------------
---------------
                                          INCHES          CU.
FEET     PERCENT
                                         --------
----------    -------
   PRECIPITATION                          28.70
291706.844    100.00

   RUNOFF                                  0.000
0.000      0.00

   EVAPOTRANSPIRATION                     18.192
184906.094     63.39

   DRAINAGE COLLECTED FROM LAYER  3       11.8725
120671.625     41.37

   PERC./LEAKAGE THROUGH LAYER  5          0.001763
17.916      0.01

   AVG. HEAD ON TOP OF LAYER  4            1.9087

   CHANGE IN WATER STORAGE                -1.366        -
13888.806     -4.76

   SOIL WATER AT START OF YEAR           212.312
2157939.500

   SOIL WATER AT END OF YEAR             212.150
2156292.000

   SNOW WATER AT START OF YEAR             2.050
20838.713      7.14
```

```
   SNOW WATER AT END OF YEAR                    0.846
8597.432      2.95

   ANNUAL WATER BUDGET BALANCE                  0.0000
0.008      0.00


*****************************************************************
**************
```

```
*****************************************************************
**************

          AVERAGE MONTHLY VALUES IN INCHES FOR YEARS    1 THROUGH
10
 ---------------------------------------------------------------
---------------

                              JAN/JUL  FEB/AUG  MAR/SEP  APR/OCT
MAY/NOV  JUN/DEC
                              -------  -------  -------  -------
-------  -------
   PRECIPITATION
   -------------
     TOTALS                     1.09     0.72     1.81     2.15
3.52     4.53
                                3.72     3.43     3.13     1.54
1.61     1.47

     STD. DEVIATIONS            0.54     0.33     0.54     1.22
1.36     2.13
                                1.39     1.52     0.69     0.96
0.99     0.61

   RUNOFF
   ------
     TOTALS                     0.000    0.000    0.000    0.000
0.000    0.000
                                0.000    0.000    0.000    0.000
0.000    0.000

     STD. DEVIATIONS            0.000    0.000    0.000    0.000
0.000    0.000
                                0.000    0.000    0.000    0.000
0.000    0.000
```

```
   EVAPOTRANSPIRATION
   ------------------
     TOTALS                    0.416    0.485    0.496    0.333
3.287    3.646
                               3.082    2.667    2.549    1.352
0.707    0.387

     STD. DEVIATIONS           0.101    0.107    0.084    0.250
0.938    1.146
                               0.973    1.266    0.609    0.576
0.297    0.060

   LATERAL DRAINAGE COLLECTED FROM LAYER  3
   ----------------------------------------
     TOTALS                    0.0718   0.0165   0.0866   0.6122
1.1465   2.1040
                               1.7752   1.3040   0.9254   0.6242
0.4523   0.2649

     STD. DEVIATIONS           0.0829   0.0191   0.0904   0.3276
0.2504   0.4001
                               0.7352   0.8557   0.6935   0.4673
0.5334   0.3294

   PERCOLATION/LEAKAGE THROUGH LAYER  5
   -------------------------------------
     TOTALS                    0.0000   0.0000   0.0000   0.0001
0.0002   0.0003
                               0.0003   0.0002   0.0001   0.0001
0.0001   0.0000

     STD. DEVIATIONS           0.0000   0.0000   0.0000   0.0000
0.0000   0.0001
                               0.0001   0.0001   0.0001   0.0001
0.0001   0.0001


 ------------------------------------------------------------------
---------------
                AVERAGES OF MONTHLY AVERAGED DAILY HEADS (INCHES)
 ------------------------------------------------------------------
---------------


   DAILY AVERAGE HEAD ON TOP OF LAYER  4
   -------------------------------------
     AVERAGES                  0.1363   0.0345   0.1644   1.2010
2.1765   4.1274
                               3.3700   2.4755   1.8153   1.1851
0.8872   0.5029

     STD. DEVIATIONS           0.1574   0.0398   0.1716   0.6427
```

```
0.4754    0.7849
                                  1.3956    1.6245    1.3603    0.8871
1.0463    0.6253

*****************************************************************
**************


*****************************************************************
**************

      AVERAGE ANNUAL TOTALS & (STD. DEVIATIONS) FOR YEARS    1
THROUGH   10
 ---------------------------------------------------------------
---------------
                                        INCHES            CU. FEET
PERCENT
                                   -------------------
-------------   ---------
  PRECIPITATION                    28.72    (   2.922)     291930.5
100.00

  RUNOFF                            0.000   (  0.0000)
0.00      0.000

  EVAPOTRANSPIRATION               19.409   (  2.0073)
197271.31     67.575

  LATERAL DRAINAGE COLLECTED        9.38372 (  2.60587)
95376.086   32.67082
    FROM LAYER  3

  PERCOLATION/LEAKAGE THROUGH       0.00140 (  0.00037)
14.250     0.00488
    LAYER  5

  AVERAGE HEAD ON TOP               1.506 (    0.418)
    OF LAYER  4

  CHANGE IN WATER STORAGE          -0.072   (  0.9980)       -
731.29     -0.251


*****************************************************************
**************
```

```
*****************************************************************
*************

                 PEAK DAILY VALUES FOR YEARS    1 THROUGH   10
    ---------------------------------------------------------------
-----------
                                                  (INCHES)
(CU. FT.)
                                                 ----------
-------------
       PRECIPITATION                               3.44
34964.160

       RUNOFF                                      0.000
0.0000

       DRAINAGE COLLECTED FROM LAYER  3            0.10132
1029.80664

       PERCOLATION/LEAKAGE THROUGH LAYER  5        0.000014
0.14348

       AVERAGE HEAD ON TOP OF LAYER  4             5.963

       MAXIMUM HEAD ON TOP OF LAYER  4             8.351

       LOCATION OF MAXIMUM HEAD IN LAYER  3
             (DISTANCE FROM DRAIN)                29.9 FEET

       SNOW WATER                                  4.52
45910.6602


       MAXIMUM VEG. SOIL WATER (VOL/VOL)                    0.4630

       MINIMUM VEG. SOIL WATER (VOL/VOL)                    0.1160

        ***  Maximum heads are computed using McEnroe's
equations.  ***

            Reference:  Maximum Saturated Depth over Landfill
Liner
                        by Bruce M. McEnroe, University of
Kansas
                        ASCE Journal of Environmental
Engineering
                        Vol. 119, No. 2, March 1993, pp. 262-
270.
```

****
****

****
****

FINAL WATER STORAGE AT END OF YEAR 10

LAYER	(INCHES)	(VOL/VOL)
1	2.6989	0.2249
2	198.5600	0.2920
3	0.6430	0.0536
4	0.0000	0.0000
5	10.2480	0.4270
SNOW WATER	0.846	

****
****

****
****

```
******************************************************************
*************

******************************************************************
*************
 **
**
 **
**
 **                HYDROLOGIC EVALUATION OF LANDFILL PERFORMANCE
**
 **                  HELP MODEL VERSION 3.07  (1 NOVEMBER 1997)
**
 **                    DEVELOPED BY ENVIRONMENTAL LABORATORY
**
 **                      USAE WATERWAYS EXPERIMENT STATION
**
 **               FOR USEPA RISK REDUCTION ENGINEERING LABORATORY
**
 **
**
 **
**

******************************************************************
*************

******************************************************************
*************


 PRECIPITATION DATA FILE:     c:\download\Phase4.D4
 TEMPERATURE DATA FILE:       c:\download\Phase4.D7
 SOLAR RADIATION DATA FILE:   c:\download\Phase4.D13
 EVAPOTRANSPIRATION DATA:     c:\download\Phase4.D11
 SOIL AND DESIGN DATA FILE:   c:\download\Phase4.D10
 OUTPUT DATA FILE:            c:\download\Phase4.OUT


 TIME:  15:51     DATE:   5/30/2013


******************************************************************
*************
```

TITLE: Regional Landfill Phase 4

****
****

NOTE: INITIAL MOISTURE CONTENT OF THE LAYERS AND SNOW WATER WERE
COMPUTED AS NEARLY STEADY-STATE VALUES BY THE PROGRAM.

LAYER 1

TYPE 1 - VERTICAL PERCOLATION LAYER
MATERIAL TEXTURE NUMBER 8

THICKNESS	=	12.00	INCHES
POROSITY	=	0.4630	VOL/VOL
FIELD CAPACITY	=	0.2320	VOL/VOL
WILTING POINT	=	0.1160	VOL/VOL
INITIAL SOIL WATER CONTENT	=	0.2715	VOL/VOL
EFFECTIVE SAT. HYD. COND.	=	0.369999994000E-03	CM/SEC

LAYER 2

TYPE 1 - VERTICAL PERCOLATION LAYER
MATERIAL TEXTURE NUMBER 18

THICKNESS	=	540.00	INCHES
POROSITY	=	0.6710	VOL/VOL
FIELD CAPACITY	=	0.2920	VOL/VOL
WILTING POINT	=	0.0770	VOL/VOL
INITIAL SOIL WATER CONTENT	=	0.2920	VOL/VOL
EFFECTIVE SAT. HYD. COND.	=	0.100000005000E-02	CM/SEC

LAYER 3

TYPE 2 - LATERAL DRAINAGE LAYER
MATERIAL TEXTURE NUMBER 1

```
THICKNESS                    =     12.00   INCHES
POROSITY                     =      0.4170 VOL/VOL
FIELD CAPACITY               =      0.0450 VOL/VOL
WILTING POINT                =      0.0180 VOL/VOL
INITIAL SOIL WATER CONTENT   =      0.0543 VOL/VOL
EFFECTIVE SAT. HYD. COND.    =  0.999999978000E-02
CM/SEC
SLOPE                        =      3.00   PERCENT
DRAINAGE LENGTH              =    100.0    FEET
```

LAYER 4

TYPE 4 - FLEXIBLE MEMBRANE LINER
MATERIAL TEXTURE NUMBER 35

```
THICKNESS                    =      0.06   INCHES
POROSITY                     =      0.0000 VOL/VOL
FIELD CAPACITY               =      0.0000 VOL/VOL
WILTING POINT                =      0.0000 VOL/VOL
INITIAL SOIL WATER CONTENT   =      0.0000 VOL/VOL
EFFECTIVE SAT. HYD. COND.    =  0.199999996000E-12
CM/SEC
FML PINHOLE DENSITY          =      1.00   HOLES/ACRE
FML INSTALLATION DEFECTS     =      4.00   HOLES/ACRE
FML PLACEMENT QUALITY        =  3 - GOOD
```

LAYER 5

TYPE 3 - BARRIER SOIL LINER
MATERIAL TEXTURE NUMBER 16

```
THICKNESS                    =     24.00   INCHES
POROSITY                     =      0.4270 VOL/VOL
FIELD CAPACITY               =      0.4180 VOL/VOL
WILTING POINT                =      0.3670 VOL/VOL
INITIAL SOIL WATER CONTENT   =      0.4270 VOL/VOL
EFFECTIVE SAT. HYD. COND.    =  0.100000001000E-06
CM/SEC
```

GENERAL DESIGN AND EVAPORATIVE ZONE DATA

NOTE: SCS RUNOFF CURVE NUMBER WAS COMPUTED FROM DEFAULT
SOIL DATA BASE USING SOIL TEXTURE # 8 WITH BARE
GROUND CONDITIONS, A SURFACE SLOPE OF 3.% AND
A SLOPE LENGTH OF 200. FEET.

SCS RUNOFF CURVE NUMBER	=	90.80	
FRACTION OF AREA ALLOWING RUNOFF	=	0.0	PERCENT
AREA PROJECTED ON HORIZONTAL PLANE	=	2.800	ACRES
EVAPORATIVE ZONE DEPTH	=	8.0	INCHES
INITIAL WATER IN EVAPORATIVE ZONE	=	2.330	INCHES
UPPER LIMIT OF EVAPORATIVE STORAGE	=	3.704	INCHES
LOWER LIMIT OF EVAPORATIVE STORAGE	=	0.928	INCHES
INITIAL SNOW WATER	=	0.998	INCHES
INITIAL WATER IN LAYER MATERIALS	=	171.838	INCHES
TOTAL INITIAL WATER	=	172.835	INCHES
TOTAL SUBSURFACE INFLOW	=	0.00	INCHES/YEAR

EVAPOTRANSPIRATION AND WEATHER DATA

NOTE: EVAPOTRANSPIRATION DATA WAS OBTAINED FROM
DULUTH MINNESOTA

STATION LATITUDE	=	46.50	DEGREES
MAXIMUM LEAF AREA INDEX	=	0.00	
START OF GROWING SEASON (JULIAN DATE)	=	144	
END OF GROWING SEASON (JULIAN DATE)	=	261	
EVAPORATIVE ZONE DEPTH	=	8.0	INCHES
AVERAGE ANNUAL WIND SPEED	=	11.20	MPH
AVERAGE 1ST QUARTER RELATIVE HUMIDITY	=	70.00	%
AVERAGE 2ND QUARTER RELATIVE HUMIDITY	=	66.00	%
AVERAGE 3RD QUARTER RELATIVE HUMIDITY	=	74.00	%
AVERAGE 4TH QUARTER RELATIVE HUMIDITY	=	74.00	%

NOTE: PRECIPITATION DATA WAS SYNTHETICALLY GENERATED USING
COEFFICIENTS FOR DULUTH MINNESOTA

NORMAL MEAN MONTHLY PRECIPITATION (INCHES)

JAN/JUL	FEB/AUG	MAR/SEP	APR/OCT	MAY/NOV	JUN/DEC
1.20	0.90	1.78	2.16	3.15	3.96
3.96	4.12	3.26	2.21	1.69	1.29

NOTE: TEMPERATURE DATA WAS SYNTHETICALLY GENERATED USING
COEFFICIENTS FOR DULUTH MINNESOTA

NORMAL MEAN MONTHLY TEMPERATURE (DEGREES FAHRENHEIT)

JAN/JUL	FEB/AUG	MAR/SEP	APR/OCT	MAY/NOV	JUN/DEC
6.30	12.00	22.90	38.30	50.30	59.40
65.30	63.20	54.00	44.20	28.20	13.80

NOTE: SOLAR RADIATION DATA WAS SYNTHETICALLY GENERATED USING
COEFFICIENTS FOR DULUTH MINNESOTA
AND STATION LATITUDE = 46.50 DEGREES

****

MONTHLY TOTALS (IN INCHES) FOR YEAR 1

	JAN/JUL	FEB/AUG	MAR/SEP	APR/OCT	MAY/NOV	JUN/DEC

```
------- -------

 PRECIPITATION                      0.51    0.83    1.24    1.02
1.64    3.93
                                    3.41    3.48    2.98    0.90
2.99    0.77

 RUNOFF                             0.000   0.000   0.000   0.000
0.000   0.000
                                    0.000   0.000   0.000   0.000
0.000   0.000

 EVAPOTRANSPIRATION                 0.510   0.500   0.426   0.173
1.782   4.304
                                    2.107   4.433   2.408   0.633
1.035   0.478

 LATERAL DRAINAGE COLLECTED         0.0846  0.0194  0.0742  0.4958
0.8294  1.5247
   FROM LAYER  3                    0.5649  0.3604  0.2375  0.4490
0.1170  0.1552

 PERCOLATION/LEAKAGE THROUGH        0.0000  0.0000  0.0000  0.0001
0.0001  0.0002
   LAYER  5                         0.0001  0.0001  0.0000  0.0001
0.0000  0.0000


 ------------------------------------------------------------------
---------------
                    MONTHLY SUMMARIES FOR DAILY HEADS (INCHES)
 ------------------------------------------------------------------
---------------


 AVERAGE DAILY HEAD ON              0.161   0.041   0.141   0.973
1.575   2.991
   TOP OF LAYER  4                  1.072   0.684   0.466   0.852
0.230   0.295

 STD. DEVIATION OF DAILY            0.066   0.015   0.208   0.283
0.765   0.760
   HEAD ON TOP OF LAYER  4          0.406   0.122   0.152   0.271
0.091   0.125


*****************************************************************
**************
```

```
*****************************************************************
**************

                          ANNUAL TOTALS FOR YEAR     1
 ---------------------------------------------------------------
---------------
                                          INCHES          CU.
FEET     PERCENT
                                         --------
----------    -------
   PRECIPITATION                          23.70
240886.828    100.00

   RUNOFF                                  0.000
0.000      0.00

   EVAPOTRANSPIRATION                     18.788
190964.109     79.28

   DRAINAGE COLLECTED FROM LAYER  3        4.9121
49926.172     20.73

   PERC./LEAKAGE THROUGH LAYER  5          0.000783
7.954      0.00

   AVG. HEAD ON TOP OF LAYER  4            0.7899

   CHANGE IN WATER STORAGE                -0.001           -
11.477      0.00

   SOIL WATER AT START OF YEAR           171.838
1746558.870

   SOIL WATER AT END OF YEAR             171.837
1746547.370

   SNOW WATER AT START OF YEAR             0.998
10138.972      4.21

   SNOW WATER AT END OF YEAR               0.998
10138.972      4.21

   ANNUAL WATER BUDGET BALANCE             0.0000
0.076      0.00

*****************************************************************
**************
```

```
*****************************************************************
**************

                    MONTHLY TOTALS (IN INCHES) FOR YEAR    2
 ---------------------------------------------------------------
---------------

                                    JAN/JUL FEB/AUG MAR/SEP APR/OCT
MAY/NOV JUN/DEC
                                    ------- ------- ------- -------
------- -------

 PRECIPITATION                       0.65    0.95    1.83    5.02
4.48    5.12
                                     3.67    1.18    4.03    1.03
0.50    2.51

 RUNOFF                              0.000   0.000   0.000   0.000
0.000   0.000
                                     0.000   0.000   0.000   0.000
0.000   0.000

 EVAPOTRANSPIRATION                  0.386   0.428   0.462   0.922
3.889   3.426
                                     3.614   0.363   3.058   1.389
0.860   0.360

 LATERAL DRAINAGE COLLECTED          0.0838  0.0192  0.0833  0.6787
1.2535  2.0303
   FROM LAYER  3                     2.6276  2.7267  1.5823  0.5802
0.1409  0.0360

 PERCOLATION/LEAKAGE THROUGH         0.0000  0.0000  0.0000  0.0001
0.0002  0.0003
   LAYER  5                          0.0004  0.0004  0.0002  0.0001
0.0000  0.0000


 ---------------------------------------------------------------
---------------
                    MONTHLY SUMMARIES FOR DAILY HEADS (INCHES)
 ---------------------------------------------------------------
---------------


 AVERAGE DAILY HEAD ON               0.159   0.040   0.158   1.331
2.380   3.983
   TOP OF LAYER  4                   4.988   5.176   3.104   1.101
0.276   0.068
```

```
 STD. DEVIATION OF DAILY          0.065   0.015   0.175   0.328
0.834   0.542
   HEAD ON TOP OF LAYER  4        0.374   0.329   0.508   0.443
0.110   0.028

*****************************************************************
**************


*****************************************************************
**************

                          ANNUAL TOTALS FOR YEAR    2
 ---------------------------------------------------------------
---------------
                                          INCHES          CU.
FEET     PERCENT
                                         --------
----------    -------
   PRECIPITATION                          30.97
314779.094    100.00

   RUNOFF                                  0.000
0.000      0.00

   EVAPOTRANSPIRATION                     19.156
194702.125     61.85

   DRAINAGE COLLECTED FROM LAYER  3       11.8424
120366.609     38.24

   PERC./LEAKAGE THROUGH LAYER  5          0.001735
17.639      0.01

   AVG. HEAD ON TOP OF LAYER  4            1.8972

   CHANGE IN WATER STORAGE                -0.030          -
307.478     -0.10

   SOIL WATER AT START OF YEAR           171.837
1746547.370

   SOIL WATER AT END OF YEAR             171.021
1738256.250

   SNOW WATER AT START OF YEAR             0.998
10138.972      3.22
```

```
   SNOW WATER AT END OF YEAR                    1.783
18122.623      5.76

   ANNUAL WATER BUDGET BALANCE                  0.0000
0.208      0.00


*****************************************************************
**************


*****************************************************************
**************

                    MONTHLY TOTALS (IN INCHES) FOR YEAR    3
 ---------------------------------------------------------------
---------------

                                        JAN/JUL FEB/AUG MAR/SEP APR/OCT
MAY/NOV JUN/DEC
                                        ------- ------- ------- -------
------- -------

 PRECIPITATION                           1.30    0.56    0.82    0.74
6.23    9.47
                                         5.20    2.18    2.92    1.15
1.01    1.18

 RUNOFF                                  0.000   0.000   0.000   0.000
0.000   0.000
                                         0.000   0.000   0.000   0.000
0.000   0.000

 EVAPOTRANSPIRATION                      0.485   0.571   0.670   0.417
4.904   5.226
                                         4.680   1.786   2.732   1.327
0.495   0.358

 LATERAL DRAINAGE COLLECTED              0.0087  0.0020  0.0006  0.1247
1.0168  1.9108
   FROM LAYER  3                         1.5131  2.3337  2.3352  0.7565
0.1795  0.0459

 PERCOLATION/LEAKAGE THROUGH             0.0000  0.0000  0.0000  0.0000
0.0002  0.0003
   LAYER  5                              0.0002  0.0003  0.0003  0.0001
0.0000  0.0000
```

```
 ------------------------------------------------------------------
---------------
                    MONTHLY SUMMARIES FOR DAILY HEADS (INCHES)
 ------------------------------------------------------------------
---------------


 AVERAGE DAILY HEAD ON              0.016   0.004   0.001   0.245
1.930   3.748
   TOP OF LAYER  4                  2.872   4.430   4.581   1.436
0.352   0.087

 STD. DEVIATION OF DAILY            0.007   0.002   0.000   0.426
0.628   0.400
   HEAD ON TOP OF LAYER  4          0.337   0.717   0.992   0.589
0.140   0.036


******************************************************************
**************


******************************************************************
**************

                           ANNUAL TOTALS FOR YEAR    3
 ------------------------------------------------------------------
---------------
                                            INCHES          CU.
FEET     PERCENT
                                           --------
----------    -------
   PRECIPITATION                             32.76
332972.687    100.00

   RUNOFF                                     0.000
0.000      0.00

   EVAPOTRANSPIRATION                        23.651
240387.125     72.19

   DRAINAGE COLLECTED FROM LAYER  3         10.2277
103954.172     31.22

   PERC./LEAKAGE THROUGH LAYER  5            0.001503
15.272      0.00

   AVG. HEAD ON TOP OF LAYER  4              1.6420
```

CHANGE IN WATER STORAGE -1.120 -
11383.972 -3.42

SOIL WATER AT START OF YEAR 171.021
1738256.250

SOIL WATER AT END OF YEAR 170.862
1736639.620

SNOW WATER AT START OF YEAR 1.783
18122.623 5.44

SNOW WATER AT END OF YEAR 0.822
8355.312 2.51

ANNUAL WATER BUDGET BALANCE 0.0000
0.105 0.00

****
****

****
****

MONTHLY TOTALS (IN INCHES) FOR YEAR 4

	JAN/JUL	FEB/AUG	MAR/SEP	APR/OCT	MAY/NOV	JUN/DEC
PRECIPITATION	1.30	0.82	1.74	1.50	3.81	3.92
	1.36	4.38	2.44	0.90	0.60	2.09
RUNOFF	0.000	0.000	0.000	0.000	0.000	0.000
	0.000	0.000	0.000	0.000	0.000	0.000
EVAPOTRANSPIRATION	0.286	0.605	0.395	0.103		

```
3.360   2.989
                                    1.955   3.561   1.969   0.619
0.881   0.397

 LATERAL DRAINAGE COLLECTED         0.0110  0.0026  0.0007  0.3267
1.3380  2.3192
   FROM LAYER  3                    1.5458  0.6271  0.5014  0.2791
0.0691  0.0177

 PERCOLATION/LEAKAGE THROUGH        0.0000  0.0000  0.0000  0.0001
0.0002  0.0003
   LAYER  5                         0.0002  0.0001  0.0001  0.0000
0.0000  0.0000


 ----------------------------------------------------------------
---------------
                    MONTHLY SUMMARIES FOR DAILY HEADS (INCHES)
 ----------------------------------------------------------------
---------------


 AVERAGE DAILY HEAD ON              0.021   0.005   0.001   0.641
2.540   4.550
   TOP OF LAYER  4                  2.935   1.190   0.984   0.530
0.136   0.034

 STD. DEVIATION OF DAILY            0.009   0.002   0.001   0.832
0.306   0.557
   HEAD ON TOP OF LAYER  4          0.988   0.340   0.243   0.191
0.054   0.014


*****************************************************************
**************


*****************************************************************
**************

                          ANNUAL TOTALS FOR YEAR     4
 ----------------------------------------------------------------
---------------
                                          INCHES          CU.
FEET      PERCENT
                                         --------
----------    -------
   PRECIPITATION                           24.86
252677.156    100.00
```

```
   RUNOFF                                          0.000
0.000      0.00

   EVAPOTRANSPIRATION                             17.121
174013.859     68.87

   DRAINAGE COLLECTED FROM LAYER  3                7.0384
71538.008     28.31

   PERC./LEAKAGE THROUGH LAYER  5                  0.001059
10.763      0.00

   AVG. HEAD ON TOP OF LAYER  4                    1.1305

   CHANGE IN WATER STORAGE                         0.700
7114.462      2.82

   SOIL WATER AT START OF YEAR                   170.862
1736639.620

   SOIL WATER AT END OF YEAR                     170.591
1733884.250

   SNOW WATER AT START OF YEAR                     0.822
8355.312      3.31

   SNOW WATER AT END OF YEAR                       1.793
18225.107      7.21

   ANNUAL WATER BUDGET BALANCE                     0.0000
0.076      0.00

*****************************************************************
**************

*****************************************************************
**************

                    MONTHLY TOTALS (IN INCHES) FOR YEAR    5
 ---------------------------------------------------------------
---------------

                                   JAN/JUL FEB/AUG MAR/SEP APR/OCT
MAY/NOV JUN/DEC
                                   ------- ------- ------- -------
```

```
------- -------

 PRECIPITATION                    1.17    1.36    1.38    2.26
2.94    4.38
                                  4.36    4.15    2.62    0.85
2.04    1.60

 RUNOFF                           0.000   0.000   0.000   0.000
0.000   0.000
                                  0.000   0.000   0.000   0.000
0.000   0.000

 EVAPOTRANSPIRATION               0.322   0.358   0.536   0.451
2.702   3.542
                                  4.048   2.352   2.601   1.090
0.325   0.369

 LATERAL DRAINAGE COLLECTED       0.0043  0.0010  0.2247  1.2649
0.9790  2.0613
   FROM LAYER  3                  2.0641  1.3248  0.8735  0.3310
0.0804  0.0206

 PERCOLATION/LEAKAGE THROUGH      0.0000  0.0000  0.0000  0.0002
0.0002  0.0003
   LAYER  5                       0.0003  0.0002  0.0001  0.0001
0.0000  0.0000


 ------------------------------------------------------------------
---------------
                    MONTHLY SUMMARIES FOR DAILY HEADS (INCHES)
 ------------------------------------------------------------------
---------------


 AVERAGE DAILY HEAD ON            0.008   0.002   0.426   2.481
1.859   4.044
   TOP OF LAYER  4                3.918   2.515   1.714   0.628
0.158   0.039

 STD. DEVIATION OF DAILY          0.003   0.001   0.662   0.585
0.226   0.692
   HEAD ON TOP OF LAYER  4        0.451   0.439   0.554   0.239
0.063   0.016


*******************************************************************
**************
```

```
*****************************************************************
**************

                          ANNUAL TOTALS FOR YEAR     5
 ---------------------------------------------------------------
---------------
                                          INCHES          CU.
FEET     PERCENT
                                         --------
----------    -------
   PRECIPITATION                          29.11
295874.031    100.00

   RUNOFF                                  0.000
0.000      0.00

   EVAPOTRANSPIRATION                     18.696
190030.484     64.23

   DRAINAGE COLLECTED FROM LAYER  3        9.2296
93809.406     31.71

   PERC./LEAKAGE THROUGH LAYER  5          0.001378
14.008      0.00

   AVG. HEAD ON TOP OF LAYER  4            1.4827

   CHANGE IN WATER STORAGE                 1.183
12020.240      4.06

   SOIL WATER AT START OF YEAR           170.591
1733884.250

   SOIL WATER AT END OF YEAR             172.816
1756501.120

   SNOW WATER AT START OF YEAR             1.793
18225.107      6.16

   SNOW WATER AT END OF YEAR               0.751
7628.526      2.58

   ANNUAL WATER BUDGET BALANCE             0.0000          -
0.092      0.00


*****************************************************************
**************
```

```
*****************************************************************
**************

                    MONTHLY TOTALS (IN INCHES) FOR YEAR    6
 ---------------------------------------------------------------
---------------

                                      JAN/JUL FEB/AUG MAR/SEP APR/OCT
MAY/NOV JUN/DEC
                                      ------- ------- ------- -------
------- -------

 PRECIPITATION                         0.80    1.02    2.30    2.75
3.91    1.39
                                       4.52    3.27    3.87    1.54
3.17    1.03

 RUNOFF                                0.000   0.000   0.000   0.000
0.000   0.000
                                       0.000   0.000   0.000   0.000
0.000   0.000

 EVAPOTRANSPIRATION                    0.383   0.500   0.486   0.209
3.960   1.455
                                       3.509   2.590   3.378   0.720
1.182   0.510

 LATERAL DRAINAGE COLLECTED            0.0050  0.0011  0.0245  0.6092
1.6155  2.7606
   FROM LAYER  3                       2.3680  1.1265  0.7868  0.6554
0.6597  0.9792

 PERCOLATION/LEAKAGE THROUGH           0.0000  0.0000  0.0000  0.0001
0.0002  0.0004
   LAYER  5                            0.0003  0.0002  0.0001  0.0001
0.0001  0.0001


 ---------------------------------------------------------------
---------------
                    MONTHLY SUMMARIES FOR DAILY HEADS (INCHES)
 ---------------------------------------------------------------
---------------


 AVERAGE DAILY HEAD ON                 0.009   0.002   0.047   1.195
3.067   5.415
   TOP OF LAYER  4                     4.495   2.139   1.543   1.244
1.294   1.859
```

```
 STD. DEVIATION OF DAILY          0.004   0.001   0.087   0.498
0.554   0.437
   HEAD ON TOP OF LAYER  4        1.269   0.424   0.455   0.504
0.868   0.663

*****************************************************************
**************


*****************************************************************
**************

                          ANNUAL TOTALS FOR YEAR    6
 ---------------------------------------------------------------
---------------
                                          INCHES          CU.
FEET     PERCENT
                                         --------
----------    -------
   PRECIPITATION                          29.57
300549.562    100.00

   RUNOFF                                  0.000
0.000      0.00

   EVAPOTRANSPIRATION                     18.885
191946.109     63.87

   DRAINAGE COLLECTED FROM LAYER  3       11.5917
117817.578     39.20

   PERC./LEAKAGE THROUGH LAYER  5          0.001714
17.418      0.01

   AVG. HEAD ON TOP OF LAYER  4            1.8592

   CHANGE IN WATER STORAGE                -0.908          -
9231.592     -3.07

   SOIL WATER AT START OF YEAR           172.816
1756501.120

   SOIL WATER AT END OF YEAR             171.693
1745083.000

   SNOW WATER AT START OF YEAR             0.751
7628.526      2.54
```

```
   SNOW WATER AT END OF YEAR                    0.966
9814.995      3.27

   ANNUAL WATER BUDGET BALANCE                  0.0000
0.034      0.00


*****************************************************************
**************


*****************************************************************
**************

                    MONTHLY TOTALS (IN INCHES) FOR YEAR    7
 ---------------------------------------------------------------
---------------

                                      JAN/JUL FEB/AUG MAR/SEP APR/OCT
MAY/NOV JUN/DEC
                                      ------- ------- ------- -------
------- -------

 PRECIPITATION                         0.70    0.54    1.87    2.47
4.50    6.03
                                       5.57    2.56    2.03    3.90
1.25    0.79

 RUNOFF                                0.000   0.000   0.000   0.000
0.000   0.000
                                       0.000   0.000   0.000   0.000
0.000   0.000

 EVAPOTRANSPIRATION                    0.388   0.353   0.513   0.441
3.993   4.755
                                       3.574   2.268   1.205   1.883
0.375   0.368

 LATERAL DRAINAGE COLLECTED            0.2498  0.0573  0.2015  0.6377
0.7709  2.2271
   FROM LAYER  3                       2.3178  2.3333  0.7843  0.3749
1.5398  0.6496

 PERCOLATION/LEAKAGE THROUGH           0.0000  0.0000  0.0000  0.0001
0.0001  0.0003
   LAYER  5                            0.0003  0.0003  0.0001  0.0001
0.0002  0.0001
```

```
-------------------------------------------------------------------
---------------
                    MONTHLY SUMMARIES FOR DAILY HEADS (INCHES)
-------------------------------------------------------------------
---------------


 AVERAGE DAILY HEAD ON              0.474   0.120   0.383   1.251
1.463   4.369
   TOP OF LAYER  4                  4.400   4.430   1.539   0.712
3.021   1.233

 STD. DEVIATION OF DAILY            0.195   0.045   0.534   0.095
0.398   0.770
   HEAD ON TOP OF LAYER  4          0.550   0.704   0.613   0.335
0.606   0.507


*******************************************************************
**************


*******************************************************************
**************

                           ANNUAL TOTALS FOR YEAR     7
-------------------------------------------------------------------
---------------
                                          INCHES          CU.
FEET     PERCENT
                                         --------
----------    -------
   PRECIPITATION                          32.21
327382.500    100.00

   RUNOFF                                  0.000
0.000      0.00

   EVAPOTRANSPIRATION                     20.116
204462.016     62.45

   DRAINAGE COLLECTED FROM LAYER  3       12.1440
123431.789     37.70

   PERC./LEAKAGE THROUGH LAYER  5          0.001804
18.335      0.01

   AVG. HEAD ON TOP OF LAYER  4            1.9495
```

```
   CHANGE IN WATER STORAGE                    -0.052          -
529.856     -0.16

   SOIL WATER AT START OF YEAR               171.693
1745083.000

   SOIL WATER AT END OF YEAR                 172.272
1750968.000

   SNOW WATER AT START OF YEAR                 0.966
9814.995      3.00

   SNOW WATER AT END OF YEAR                   0.335
3400.236      1.04

   ANNUAL WATER BUDGET BALANCE                 0.0000
0.218      0.00

*****************************************************************
**************

*****************************************************************
**************

                    MONTHLY TOTALS (IN INCHES) FOR YEAR    8
 ---------------------------------------------------------------
---------------

                                  JAN/JUL FEB/AUG MAR/SEP APR/OCT
MAY/NOV JUN/DEC
                                  ------- ------- ------- -------
------- -------

 PRECIPITATION                     0.84    0.33    2.47    1.25
2.67    4.55
                                   4.53    4.01    2.82    1.78
0.85    1.35

 RUNOFF                            0.000   0.000   0.000   0.000
0.000   0.000
                                   0.000   0.000   0.000   0.000
0.000   0.000

 EVAPOTRANSPIRATION                0.632   0.674   0.461   0.044
```

```
3.004   4.816
                                    3.056   3.789   2.467   1.883
0.771   0.336

 LATERAL DRAINAGE COLLECTED         0.1563  0.0365  0.2093  0.8317
1.3262  1.5421
   FROM LAYER  3                    0.5007  0.6989  0.4945  0.3441
0.0952  0.0246

 PERCOLATION/LEAKAGE THROUGH        0.0000  0.0000  0.0000  0.0001
0.0002  0.0002
   LAYER  5                         0.0001  0.0001  0.0001  0.0001
0.0000  0.0000


 ------------------------------------------------------------------
---------------
                     MONTHLY SUMMARIES FOR DAILY HEADS (INCHES)
 ------------------------------------------------------------------
---------------


 AVERAGE DAILY HEAD ON              0.297   0.074   0.397   1.632
2.518   3.025
   TOP OF LAYER  4                  0.951   1.327   0.970   0.653
0.187   0.047

 STD. DEVIATION OF DAILY            0.122   0.029   0.506   0.418
0.706   0.838
   HEAD ON TOP OF LAYER  4          0.382   0.535   0.313   0.176
0.074   0.019


*****************************************************************
**************


*****************************************************************
**************

                           ANNUAL TOTALS FOR YEAR    8
 ------------------------------------------------------------------
---------------
                                          INCHES          CU.
FEET     PERCENT
                                         --------
----------    -------
   PRECIPITATION                           27.45
279001.812    100.00
```

```
   RUNOFF                                        0.000
0.000       0.00

   EVAPOTRANSPIRATION                           21.932
222917.094      79.90

   DRAINAGE COLLECTED FROM LAYER  3              6.2603
63629.672      22.81

   PERC./LEAKAGE THROUGH LAYER  5                0.000976
9.922       0.00

   AVG. HEAD ON TOP OF LAYER  4                  1.0064

   CHANGE IN WATER STORAGE                      -0.743          -
7554.829      -2.71

   SOIL WATER AT START OF YEAR                 172.272
1750968.000

   SOIL WATER AT END OF YEAR                   170.849
1736504.250

   SNOW WATER AT START OF YEAR                   0.335
3400.236       1.22

   SNOW WATER AT END OF YEAR                     1.014
10309.131       3.70

   ANNUAL WATER BUDGET BALANCE                   0.0000          -
0.048       0.00


*****************************************************************
**************


*****************************************************************
**************

                    MONTHLY TOTALS (IN INCHES) FOR YEAR    9
 ---------------------------------------------------------------
---------------

                                   JAN/JUL FEB/AUG MAR/SEP APR/OCT
MAY/NOV JUN/DEC
                                   ------- ------- ------- -------
```

```
------- -------

 PRECIPITATION                      2.37    0.35    2.02    2.08
3.03    3.57
                                    2.57    2.42    3.75    1.03
2.53    2.17

 RUNOFF                             0.000   0.000   0.000   0.000
0.000   0.000
                                    0.000   0.000   0.000   0.000
0.000   0.000

 EVAPOTRANSPIRATION                 0.413   0.392   0.426   0.262
3.116   2.763
                                    2.551   1.560   2.742   2.192
0.760   0.375

 LATERAL DRAINAGE COLLECTED         0.0059  0.0014  0.0004  0.3393
1.3815  2.6488
   FROM LAYER  3                    2.2057  0.7607  0.1824  0.4641
0.3567  0.3719

 PERCOLATION/LEAKAGE THROUGH        0.0000  0.0000  0.0000  0.0001
0.0002  0.0004
   LAYER  5                         0.0003  0.0001  0.0000  0.0001
0.0001  0.0001


 ------------------------------------------------------------------
---------------
                    MONTHLY SUMMARIES FOR DAILY HEADS (INCHES)
 ------------------------------------------------------------------
---------------


 AVERAGE DAILY HEAD ON              0.011   0.003   0.001   0.666
2.623   5.196
   TOP OF LAYER  4                  4.187   1.444   0.358   0.881
0.700   0.706

 STD. DEVIATION OF DAILY            0.005   0.001   0.000   0.567
0.856   0.369
   HEAD ON TOP OF LAYER  4          0.603   0.593   0.140   0.440
0.201   0.199


*****************************************************************
**************
```

```
*****************************************************************
**************

                          ANNUAL TOTALS FOR YEAR     9
 ---------------------------------------------------------------
---------------
                                          INCHES          CU.
FEET     PERCENT
                                         --------
----------    -------
   PRECIPITATION                           27.89
283474.000    100.00

   RUNOFF                                   0.000
0.000      0.00

   EVAPOTRANSPIRATION                      17.551
178384.344     62.93

   DRAINAGE COLLECTED FROM LAYER  3         8.7187
88616.969     31.26

   PERC./LEAKAGE THROUGH LAYER  5           0.001300
13.216      0.00

   AVG. HEAD ON TOP OF LAYER  4             1.3979

   CHANGE IN WATER STORAGE                  1.619
16459.461      5.81

   SOIL WATER AT START OF YEAR            170.849
1736504.250

   SOIL WATER AT END OF YEAR              171.432
1742434.120

   SNOW WATER AT START OF YEAR              1.014
10309.131      3.64

   SNOW WATER AT END OF YEAR                2.050
20838.713      7.35

   ANNUAL WATER BUDGET BALANCE              0.0000
0.030      0.00


*****************************************************************
**************
```

```
*****************************************************************
**************

                    MONTHLY TOTALS (IN INCHES) FOR YEAR   10
 ---------------------------------------------------------------
---------------

                                        JAN/JUL FEB/AUG MAR/SEP APR/OCT
MAY/NOV JUN/DEC
                                        ------- ------- ------- -------
------- -------

 PRECIPITATION                           1.23    0.49    2.43    2.43
1.99    2.97
                                         1.98    6.68    3.82    2.35
1.16    1.17

 RUNOFF                                  0.000   0.000   0.000   0.000
0.000   0.000
                                         0.000   0.000   0.000   0.000
0.000   0.000

 EVAPOTRANSPIRATION                      0.354   0.465   0.587   0.313
2.163   3.182
                                         1.731   3.964   2.931   1.789
0.389   0.324

 LATERAL DRAINAGE COLLECTED              0.1030  0.0236  0.0535  0.9023
1.3738  2.5771
   FROM LAYER  3                         1.8061  0.5225  1.0797  1.8576
1.2522  0.3219

 PERCOLATION/LEAKAGE THROUGH             0.0000  0.0000  0.0000  0.0001
0.0002  0.0004
   LAYER  5                              0.0003  0.0001  0.0002  0.0003
0.0002  0.0001


 ---------------------------------------------------------------
---------------
                    MONTHLY SUMMARIES FOR DAILY HEADS (INCHES)
 ---------------------------------------------------------------
---------------


 AVERAGE DAILY HEAD ON                   0.195   0.050   0.102   1.770
2.608   5.055
   TOP OF LAYER  4                       3.429   0.992   2.118   3.527
2.456   0.611
```

```
 STD. DEVIATION OF DAILY          0.080   0.019   0.146   0.435
0.542   0.486
   HEAD ON TOP OF LAYER  4        1.358   0.223   0.554   0.320
0.959   0.251

*****************************************************************
**************


*****************************************************************
**************

                          ANNUAL TOTALS FOR YEAR   10
 ---------------------------------------------------------------
---------------
                                          INCHES          CU.
FEET     PERCENT
                                         --------
----------    -------
   PRECIPITATION                          28.70
291706.844    100.00

   RUNOFF                                  0.000
0.000      0.00

   EVAPOTRANSPIRATION                     18.192
184906.094     63.39

   DRAINAGE COLLECTED FROM LAYER  3       11.8734
120680.727     41.37

   PERC./LEAKAGE THROUGH LAYER  5          0.001762
17.912      0.01

   AVG. HEAD ON TOP OF LAYER  4            1.9094

   CHANGE IN WATER STORAGE                -1.367        -
13897.956     -4.76

   SOIL WATER AT START OF YEAR           171.432
1742434.120

   SOIL WATER AT END OF YEAR             171.269
1740777.370

   SNOW WATER AT START OF YEAR             2.050
20838.713      7.14
```

```
   SNOW WATER AT END OF YEAR                    0.846
8597.432      2.95

   ANNUAL WATER BUDGET BALANCE                  0.0000
0.061      0.00


*****************************************************************
**************
```

```
*****************************************************************
**************

          AVERAGE MONTHLY VALUES IN INCHES FOR YEARS    1 THROUGH
10
 ---------------------------------------------------------------
---------------

                              JAN/JUL  FEB/AUG  MAR/SEP  APR/OCT
MAY/NOV  JUN/DEC
                              -------  -------  -------  -------
-------  -------
   PRECIPITATION
   -------------
     TOTALS                     1.09     0.72     1.81     2.15
3.52     4.53
                                3.72     3.43     3.13     1.54
1.61     1.47

     STD. DEVIATIONS            0.54     0.33     0.54     1.22
1.36     2.13
                                1.39     1.52     0.69     0.96
0.99     0.61

   RUNOFF
   ------
     TOTALS                     0.000    0.000    0.000    0.000
0.000    0.000
                                0.000    0.000    0.000    0.000
0.000    0.000

     STD. DEVIATIONS            0.000    0.000    0.000    0.000
0.000    0.000
                                0.000    0.000    0.000    0.000
0.000    0.000
```

```
   EVAPOTRANSPIRATION
   ------------------
     TOTALS                  0.416    0.485    0.496    0.333
3.287    3.646
                             3.082    2.667    2.549    1.352
0.707    0.387

     STD. DEVIATIONS         0.101    0.107    0.084    0.250
0.938    1.146
                             0.973    1.266    0.609    0.576
0.297    0.060

   LATERAL DRAINAGE COLLECTED FROM LAYER  3
   ----------------------------------------
     TOTALS                  0.0712   0.0164   0.0873   0.6211
1.1885   2.1602
                             1.7514   1.2815   0.8858   0.6092
0.4491   0.2623

     STD. DEVIATIONS         0.0824   0.0190   0.0911   0.3283
0.2741   0.4317
                             0.7339   0.8687   0.6549   0.4645
0.5345   0.3272

   PERCOLATION/LEAKAGE THROUGH LAYER  5
   -------------------------------------
     TOTALS                  0.0000   0.0000   0.0000   0.0001
0.0002   0.0003
                             0.0003   0.0002   0.0001   0.0001
0.0001   0.0000

     STD. DEVIATIONS         0.0000   0.0000   0.0000   0.0000
0.0000   0.0001
                             0.0001   0.0001   0.0001   0.0001
0.0001   0.0000


 ------------------------------------------------------------------
---------------
                AVERAGES OF MONTHLY AVERAGED DAILY HEADS (INCHES)
 ------------------------------------------------------------------
---------------


   DAILY AVERAGE HEAD ON TOP OF LAYER  4
   -------------------------------------
     AVERAGES                0.1352   0.0342   0.1657   1.2184
2.2562   4.2376
                             3.3248   2.4327   1.7376   1.1565
0.8809   0.4979

     STD. DEVIATIONS         0.1565   0.0396   0.1729   0.6440
```

```
0.5203   0.8469
                                 1.3931   1.6491   1.2846   0.8817
1.0485   0.6212

*****************************************************************
**************



*****************************************************************
**************

      AVERAGE ANNUAL TOTALS & (STD. DEVIATIONS) FOR YEARS    1
THROUGH   10
 ---------------------------------------------------------------
---------------
                                          INCHES            CU. FEET
PERCENT
                                   -------------------
-------------   ---------
  PRECIPITATION                   28.72    (   2.922)     291930.5
100.00

  RUNOFF                           0.000   (  0.0000)
0.00      0.000

  EVAPOTRANSPIRATION              19.409   (  2.0073)
197271.31     67.575

  LATERAL DRAINAGE COLLECTED       9.38382 (  2.60700)
95377.125   32.67118
    FROM LAYER  3

  PERCOLATION/LEAKAGE THROUGH      0.00140 (  0.00037)
14.244     0.00488
    LAYER  5

  AVERAGE HEAD ON TOP              1.506 (    0.418)
    OF LAYER  4

  CHANGE IN WATER STORAGE         -0.072   (  0.9980)       -
732.30     -0.251


*****************************************************************
**************
```

```
*****************************************************************
*************

                 PEAK DAILY VALUES FOR YEARS    1 THROUGH   10
    ---------------------------------------------------------------
-----------
                                                  (INCHES)
(CU. FT.)
                                                 ----------
-------------
       PRECIPITATION                               3.44
34964.160

       RUNOFF                                      0.000
0.0000

       DRAINAGE COLLECTED FROM LAYER  3            0.10285
1045.35596

       PERCOLATION/LEAKAGE THROUGH LAYER  5        0.000014
0.14548

       AVERAGE HEAD ON TOP OF LAYER  4             6.053

       MAXIMUM HEAD ON TOP OF LAYER  4             8.453

       LOCATION OF MAXIMUM HEAD IN LAYER  3
             (DISTANCE FROM DRAIN)                30.1 FEET

       SNOW WATER                                  4.52
45910.6602


       MAXIMUM VEG. SOIL WATER (VOL/VOL)                    0.4630

       MINIMUM VEG. SOIL WATER (VOL/VOL)                    0.1160

        ***  Maximum heads are computed using McEnroe's
equations.  ***

             Reference:  Maximum Saturated Depth over Landfill
Liner
                         by Bruce M. McEnroe, University of
Kansas
                         ASCE Journal of Environmental
Engineering
                         Vol. 119, No. 2, March 1993, pp. 262-
270.
```

****
****

****
****

FINAL WATER STORAGE AT END OF YEAR 10

LAYER	(INCHES)	(VOL/VOL)
1	2.6989	0.2249
2	157.6800	0.2920
3	0.6420	0.0535
4	0.0000	0.0000
5	10.2480	0.4270
SNOW WATER	0.846	

****
****

****
****

```
******************************************************************
*************

******************************************************************
*************
 **
**
 **
**
 **                HYDROLOGIC EVALUATION OF LANDFILL PERFORMANCE
**
 **                  HELP MODEL VERSION 3.07  (1 NOVEMBER 1997)
**
 **                     DEVELOPED BY ENVIRONMENTAL LABORATORY
**
 **                       USAE WATERWAYS EXPERIMENT STATION
**
 **               FOR USEPA RISK REDUCTION ENGINEERING LABORATORY
**
 **
**
 **
**

******************************************************************
*************

******************************************************************
*************


 PRECIPITATION DATA FILE:     c:\download\Phase5.D4
 TEMPERATURE DATA FILE:       c:\download\Phase5.D7
 SOLAR RADIATION DATA FILE:   c:\download\Phase5.D13
 EVAPOTRANSPIRATION DATA:     c:\download\Phase5.D11
 SOIL AND DESIGN DATA FILE:   c:\download\Phase5.D10
 OUTPUT DATA FILE:            c:\download\Phase5.OUT


 TIME:  15:23     DATE:   6/ 3/2013


******************************************************************
*************
```

TITLE: Regional Landfill Phase 5

****
****

NOTE: INITIAL MOISTURE CONTENT OF THE LAYERS AND SNOW WATER WERE
COMPUTED AS NEARLY STEADY-STATE VALUES BY THE PROGRAM.

LAYER 1

TYPE 1 - VERTICAL PERCOLATION LAYER
MATERIAL TEXTURE NUMBER 8

THICKNESS	=	12.00	INCHES
POROSITY	=	0.4630	VOL/VOL
FIELD CAPACITY	=	0.2320	VOL/VOL
WILTING POINT	=	0.1160	VOL/VOL
INITIAL SOIL WATER CONTENT	=	0.2715	VOL/VOL
EFFECTIVE SAT. HYD. COND.	=	0.369999994000E-03	CM/SEC

LAYER 2

TYPE 1 - VERTICAL PERCOLATION LAYER
MATERIAL TEXTURE NUMBER 18

THICKNESS	=	540.00	INCHES
POROSITY	=	0.6710	VOL/VOL
FIELD CAPACITY	=	0.2920	VOL/VOL
WILTING POINT	=	0.0770	VOL/VOL
INITIAL SOIL WATER CONTENT	=	0.2920	VOL/VOL
EFFECTIVE SAT. HYD. COND.	=	0.100000005000E-02	CM/SEC

LAYER 3

TYPE 2 - LATERAL DRAINAGE LAYER
MATERIAL TEXTURE NUMBER 1

```
THICKNESS                    =     12.00   INCHES
POROSITY                     =      0.4170 VOL/VOL
FIELD CAPACITY               =      0.0450 VOL/VOL
WILTING POINT                =      0.0180 VOL/VOL
INITIAL SOIL WATER CONTENT   =      0.0543 VOL/VOL
EFFECTIVE SAT. HYD. COND.    =  0.999999978000E-02
CM/SEC
SLOPE                        =      3.00   PERCENT
DRAINAGE LENGTH              =    100.0    FEET
```

LAYER 4

TYPE 4 - FLEXIBLE MEMBRANE LINER
MATERIAL TEXTURE NUMBER 35

```
THICKNESS                    =      0.06   INCHES
POROSITY                     =      0.0000 VOL/VOL
FIELD CAPACITY               =      0.0000 VOL/VOL
WILTING POINT                =      0.0000 VOL/VOL
INITIAL SOIL WATER CONTENT   =      0.0000 VOL/VOL
EFFECTIVE SAT. HYD. COND.    =  0.199999996000E-12
CM/SEC
FML PINHOLE DENSITY          =      1.00   HOLES/ACRE
FML INSTALLATION DEFECTS     =      4.00   HOLES/ACRE
FML PLACEMENT QUALITY        =  3 - GOOD
```

LAYER 5

TYPE 3 - BARRIER SOIL LINER
MATERIAL TEXTURE NUMBER 16

```
THICKNESS                    =     24.00   INCHES
POROSITY                     =      0.4270 VOL/VOL
FIELD CAPACITY               =      0.4180 VOL/VOL
WILTING POINT                =      0.3670 VOL/VOL
INITIAL SOIL WATER CONTENT   =      0.4270 VOL/VOL
EFFECTIVE SAT. HYD. COND.    =  0.100000001000E-06
CM/SEC
```

GENERAL DESIGN AND EVAPORATIVE ZONE DATA

```
          NOTE:  SCS RUNOFF CURVE NUMBER WAS COMPUTED FROM
DEFAULT
                   SOIL DATA BASE USING SOIL TEXTURE # 8 WITH
BARE
                   GROUND CONDITIONS, A SURFACE SLOPE OF  3.% AND
                   A SLOPE LENGTH OF  200. FEET.

         SCS RUNOFF CURVE NUMBER                =     90.80
         FRACTION OF AREA ALLOWING RUNOFF       =      0.0
PERCENT
         AREA PROJECTED ON HORIZONTAL PLANE     =      2.800  ACRES
         EVAPORATIVE ZONE DEPTH                 =      8.0    INCHES
         INITIAL WATER IN EVAPORATIVE ZONE      =      2.330  INCHES
         UPPER LIMIT OF EVAPORATIVE STORAGE     =      3.704  INCHES
         LOWER LIMIT OF EVAPORATIVE STORAGE     =      0.928  INCHES
         INITIAL SNOW WATER                     =      0.998  INCHES
         INITIAL WATER IN LAYER MATERIALS       =    171.838  INCHES
         TOTAL INITIAL WATER                    =    172.835  INCHES
         TOTAL SUBSURFACE INFLOW                =      0.00
INCHES/YEAR


                     EVAPOTRANSPIRATION AND WEATHER DATA
                     -----------------------------------

          NOTE:  EVAPOTRANSPIRATION DATA WAS OBTAINED FROM
                   DULUTH                 MINNESOTA

               STATION LATITUDE                        =  46.50
DEGREES
               MAXIMUM LEAF AREA INDEX                 =   0.00
               START OF GROWING SEASON (JULIAN DATE)   =    144
               END OF GROWING SEASON (JULIAN DATE)     =    261
               EVAPORATIVE ZONE DEPTH                  =   8.0
INCHES
               AVERAGE ANNUAL WIND SPEED               =  11.20 MPH
               AVERAGE 1ST QUARTER RELATIVE HUMIDITY   =  70.00 %
               AVERAGE 2ND QUARTER RELATIVE HUMIDITY   =  66.00 %
               AVERAGE 3RD QUARTER RELATIVE HUMIDITY   =  74.00 %
               AVERAGE 4TH QUARTER RELATIVE HUMIDITY   =  74.00 %


          NOTE:  PRECIPITATION DATA WAS SYNTHETICALLY GENERATED
USING
                   COEFFICIENTS FOR    DULUTH
MINNESOTA

                   NORMAL MEAN MONTHLY PRECIPITATION (INCHES)
```

JAN/JUL	FEB/AUG	MAR/SEP	APR/OCT	MAY/NOV	JUN/DEC
1.20	0.90	1.78	2.16	3.15	3.96
3.96	4.12	3.26	2.21	1.69	1.29

NOTE: TEMPERATURE DATA WAS SYNTHETICALLY GENERATED USING
COEFFICIENTS FOR DULUTH MINNESOTA

NORMAL MEAN MONTHLY TEMPERATURE (DEGREES FAHRENHEIT)

JAN/JUL	FEB/AUG	MAR/SEP	APR/OCT	MAY/NOV	JUN/DEC
6.30	12.00	22.90	38.30	50.30	59.40
65.30	63.20	54.00	44.20	28.20	13.80

NOTE: SOLAR RADIATION DATA WAS SYNTHETICALLY GENERATED USING
COEFFICIENTS FOR DULUTH MINNESOTA
AND STATION LATITUDE = 46.50 DEGREES

****

MONTHLY TOTALS (IN INCHES) FOR YEAR 1

	JAN/JUL	FEB/AUG	MAR/SEP	APR/OCT	MAY/NOV	JUN/DEC

```
------- -------

 PRECIPITATION                      0.51    0.83    1.24    1.02
1.64    3.93
                                    3.41    3.48    2.98    0.90
2.99    0.77

 RUNOFF                             0.000   0.000   0.000   0.000
0.000   0.000
                                    0.000   0.000   0.000   0.000
0.000   0.000

 EVAPOTRANSPIRATION                 0.510   0.500   0.426   0.173
1.782   4.304
                                    2.107   4.433   2.408   0.633
1.035   0.478

 LATERAL DRAINAGE COLLECTED         0.0846  0.0194  0.0742  0.4958
0.8294  1.5247
   FROM LAYER  3                    0.5649  0.3604  0.2375  0.4490
0.1170  0.1552

 PERCOLATION/LEAKAGE THROUGH        0.0000  0.0000  0.0000  0.0001
0.0001  0.0002
   LAYER  5                         0.0001  0.0001  0.0000  0.0001
0.0000  0.0000


 ------------------------------------------------------------------
---------------
                     MONTHLY SUMMARIES FOR DAILY HEADS (INCHES)
 ------------------------------------------------------------------
---------------


 AVERAGE DAILY HEAD ON              0.161   0.041   0.141   0.973
1.575   2.991
   TOP OF LAYER  4                  1.072   0.684   0.466   0.852
0.230   0.295

 STD. DEVIATION OF DAILY            0.066   0.015   0.208   0.283
0.765   0.760
   HEAD ON TOP OF LAYER  4          0.406   0.122   0.152   0.271
0.091   0.125


*****************************************************************
**************
```

```
*****************************************************************
**************

                          ANNUAL TOTALS FOR YEAR     1
 ---------------------------------------------------------------
---------------
                                              INCHES          CU.
FEET      PERCENT
                                             --------
----------     -------
   PRECIPITATION                              23.70
240886.828     100.00

   RUNOFF                                      0.000
0.000       0.00

   EVAPOTRANSPIRATION                         18.788
190964.109      79.28

   DRAINAGE COLLECTED FROM LAYER  3            4.9121
49926.172      20.73

   PERC./LEAKAGE THROUGH LAYER  5              0.000783
7.954       0.00

   AVG. HEAD ON TOP OF LAYER  4                0.7899

   CHANGE IN WATER STORAGE                    -0.001            -
11.477       0.00

   SOIL WATER AT START OF YEAR               171.838
1746558.870

   SOIL WATER AT END OF YEAR                 171.837
1746547.370

   SNOW WATER AT START OF YEAR                 0.998
10138.972       4.21

   SNOW WATER AT END OF YEAR                   0.998
10138.972       4.21

   ANNUAL WATER BUDGET BALANCE                 0.0000
0.076       0.00

*****************************************************************
**************
```

****
****

MONTHLY TOTALS (IN INCHES) FOR YEAR 2

	JAN/JUL	FEB/AUG	MAR/SEP	APR/OCT	MAY/NOV	JUN/DEC
PRECIPITATION	0.65	0.95	1.83	5.02	4.48	5.12
	3.67	1.18	4.03	1.03	0.50	2.51
RUNOFF	0.000	0.000	0.000	0.000	0.000	0.000
	0.000	0.000	0.000	0.000	0.000	0.000
EVAPOTRANSPIRATION	0.386	0.428	0.462	0.922	3.889	3.426
	3.614	0.363	3.058	1.389	0.860	0.360
LATERAL DRAINAGE COLLECTED	0.0838	0.0192	0.0833	0.6787	1.2535	2.0303
FROM LAYER 3	2.6276	2.7267	1.5823	0.5802	0.1409	0.0360
PERCOLATION/LEAKAGE THROUGH	0.0000	0.0000	0.0000	0.0001	0.0002	0.0003
LAYER 5	0.0004	0.0004	0.0002	0.0001	0.0000	0.0000

MONTHLY SUMMARIES FOR DAILY HEADS (INCHES)

AVERAGE DAILY HEAD ON	0.159	0.040	0.158	1.331	2.380	3.983
TOP OF LAYER 4	4.988	5.176	3.104	1.101	0.276	0.068

```
 STD. DEVIATION OF DAILY          0.065   0.015   0.175   0.328
0.834   0.542
   HEAD ON TOP OF LAYER  4        0.374   0.329   0.508   0.443
0.110   0.028


*****************************************************************
**************


*****************************************************************
**************

                           ANNUAL TOTALS FOR YEAR    2
 ---------------------------------------------------------------
---------------
                                          INCHES          CU.
FEET     PERCENT
                                         --------
----------    -------
   PRECIPITATION                          30.97
314779.094    100.00

   RUNOFF                                  0.000
0.000      0.00

   EVAPOTRANSPIRATION                     19.156
194702.125     61.85

   DRAINAGE COLLECTED FROM LAYER  3       11.8424
120366.609     38.24

   PERC./LEAKAGE THROUGH LAYER  5          0.001735
17.639      0.01

   AVG. HEAD ON TOP OF LAYER  4            1.8972

   CHANGE IN WATER STORAGE                -0.030          -
307.478     -0.10

   SOIL WATER AT START OF YEAR           171.837
1746547.370

   SOIL WATER AT END OF YEAR             171.021
1738256.250

   SNOW WATER AT START OF YEAR             0.998
10138.972      3.22
```

```
   SNOW WATER AT END OF YEAR                    1.783
18122.623      5.76

   ANNUAL WATER BUDGET BALANCE                  0.0000
0.208      0.00


*****************************************************************
**************


*****************************************************************
**************

                    MONTHLY TOTALS (IN INCHES) FOR YEAR    3
 ---------------------------------------------------------------
---------------

                                     JAN/JUL FEB/AUG MAR/SEP APR/OCT
MAY/NOV JUN/DEC
                                     ------- ------- ------- -------
------- -------

 PRECIPITATION                        1.30    0.56    0.82    0.74
6.23    9.47
                                      5.20    2.18    2.92    1.15
1.01    1.18

 RUNOFF                               0.000   0.000   0.000   0.000
0.000   0.000
                                      0.000   0.000   0.000   0.000
0.000   0.000

 EVAPOTRANSPIRATION                   0.485   0.571   0.670   0.417
4.904   5.226
                                      4.680   1.786   2.732   1.327
0.495   0.358

 LATERAL DRAINAGE COLLECTED           0.0087  0.0020  0.0006  0.1247
1.0168  1.9108
   FROM LAYER  3                      1.5131  2.3337  2.3352  0.7565
0.1795  0.0459

 PERCOLATION/LEAKAGE THROUGH          0.0000  0.0000  0.0000  0.0000
0.0002  0.0003
   LAYER  5                           0.0002  0.0003  0.0003  0.0001
0.0000  0.0000
```

```
-----------------------------------------------------------------
---------------
                    MONTHLY SUMMARIES FOR DAILY HEADS (INCHES)
-----------------------------------------------------------------
---------------


 AVERAGE DAILY HEAD ON            0.016   0.004   0.001   0.245
1.930   3.748
   TOP OF LAYER  4                2.872   4.430   4.581   1.436
0.352   0.087

 STD. DEVIATION OF DAILY          0.007   0.002   0.000   0.426
0.628   0.400
   HEAD ON TOP OF LAYER  4        0.337   0.717   0.992   0.589
0.140   0.036


*****************************************************************
**************


*****************************************************************
**************

                           ANNUAL TOTALS FOR YEAR     3
-----------------------------------------------------------------
---------------
                                          INCHES          CU.
FEET     PERCENT
                                         --------
----------    -------
   PRECIPITATION                           32.76
332972.687    100.00

   RUNOFF                                   0.000
0.000      0.00

   EVAPOTRANSPIRATION                      23.651
240387.125     72.19

   DRAINAGE COLLECTED FROM LAYER  3        10.2277
103954.172     31.22

   PERC./LEAKAGE THROUGH LAYER  5           0.001503
15.272      0.00

   AVG. HEAD ON TOP OF LAYER  4             1.6420
```

```
   CHANGE IN WATER STORAGE                    -1.120        -
11383.972     -3.42

   SOIL WATER AT START OF YEAR               171.021
1738256.250

   SOIL WATER AT END OF YEAR                 170.862
1736639.620

   SNOW WATER AT START OF YEAR                 1.783
18122.623      5.44

   SNOW WATER AT END OF YEAR                   0.822
8355.312      2.51

   ANNUAL WATER BUDGET BALANCE                 0.0000
0.105      0.00

*****************************************************************
**************

*****************************************************************
**************

                    MONTHLY TOTALS (IN INCHES) FOR YEAR    4
 ---------------------------------------------------------------
---------------

                                  JAN/JUL FEB/AUG MAR/SEP APR/OCT
MAY/NOV JUN/DEC
                                  ------- ------- ------- -------
------- -------

 PRECIPITATION                     1.30    0.82    1.74    1.50
3.81    3.92
                                   1.36    4.38    2.44    0.90
0.60    2.09

 RUNOFF                            0.000   0.000   0.000   0.000
0.000   0.000
                                   0.000   0.000   0.000   0.000
0.000   0.000

 EVAPOTRANSPIRATION                0.286   0.605   0.395   0.103
```

```
3.360   2.989
                                    1.955   3.561   1.969   0.619
0.881   0.397

 LATERAL DRAINAGE COLLECTED         0.0110  0.0026  0.0007  0.3267
1.3380  2.3192
   FROM LAYER  3                    1.5458  0.6271  0.5014  0.2791
0.0691  0.0177

 PERCOLATION/LEAKAGE THROUGH        0.0000  0.0000  0.0000  0.0001
0.0002  0.0003
   LAYER  5                         0.0002  0.0001  0.0001  0.0000
0.0000  0.0000


 ---------------------------------------------------------------
---------------
                    MONTHLY SUMMARIES FOR DAILY HEADS (INCHES)
 ---------------------------------------------------------------
---------------


 AVERAGE DAILY HEAD ON              0.021   0.005   0.001   0.641
2.540   4.550
   TOP OF LAYER  4                  2.935   1.190   0.984   0.530
0.136   0.034

 STD. DEVIATION OF DAILY            0.009   0.002   0.001   0.832
0.306   0.557
   HEAD ON TOP OF LAYER  4          0.988   0.340   0.243   0.191
0.054   0.014


*****************************************************************
**************



*****************************************************************
**************

                          ANNUAL TOTALS FOR YEAR    4
 ---------------------------------------------------------------
---------------
                                         INCHES          CU.
FEET     PERCENT
                                        --------
----------    -------
   PRECIPITATION                          24.86
252677.156    100.00
```

```
   RUNOFF                                          0.000
0.000       0.00

   EVAPOTRANSPIRATION                             17.121
174013.859      68.87

   DRAINAGE COLLECTED FROM LAYER  3                7.0384
71538.008      28.31

   PERC./LEAKAGE THROUGH LAYER  5                  0.001059
10.763       0.00

   AVG. HEAD ON TOP OF LAYER  4                    1.1305

   CHANGE IN WATER STORAGE                         0.700
7114.462       2.82

   SOIL WATER AT START OF YEAR                   170.862
1736639.620

   SOIL WATER AT END OF YEAR                     170.591
1733884.250

   SNOW WATER AT START OF YEAR                     0.822
8355.312       3.31

   SNOW WATER AT END OF YEAR                       1.793
18225.107       7.21

   ANNUAL WATER BUDGET BALANCE                     0.0000
0.076       0.00

*****************************************************************
**************

*****************************************************************
**************

                    MONTHLY TOTALS (IN INCHES) FOR YEAR    5
 ---------------------------------------------------------------
---------------

                                   JAN/JUL FEB/AUG MAR/SEP APR/OCT
MAY/NOV JUN/DEC
                                   ------- ------- ------- -------
```

```
------- -------

 PRECIPITATION                      1.17    1.36    1.38    2.26
2.94    4.38
                                    4.36    4.15    2.62    0.85
2.04    1.60

 RUNOFF                             0.000   0.000   0.000   0.000
0.000   0.000
                                    0.000   0.000   0.000   0.000
0.000   0.000

 EVAPOTRANSPIRATION                 0.322   0.358   0.536   0.451
2.702   3.542
                                    4.048   2.352   2.601   1.090
0.325   0.369

 LATERAL DRAINAGE COLLECTED         0.0043  0.0010  0.2247  1.2649
0.9790  2.0613
   FROM LAYER  3                    2.0641  1.3248  0.8735  0.3310
0.0804  0.0206

 PERCOLATION/LEAKAGE THROUGH        0.0000  0.0000  0.0000  0.0002
0.0002  0.0003
   LAYER  5                         0.0003  0.0002  0.0001  0.0001
0.0000  0.0000


 ------------------------------------------------------------------
---------------
                    MONTHLY SUMMARIES FOR DAILY HEADS (INCHES)
 ------------------------------------------------------------------
---------------


 AVERAGE DAILY HEAD ON              0.008   0.002   0.426   2.481
1.859   4.044
   TOP OF LAYER  4                  3.918   2.515   1.714   0.628
0.158   0.039

 STD. DEVIATION OF DAILY            0.003   0.001   0.662   0.585
0.226   0.692
   HEAD ON TOP OF LAYER  4          0.451   0.439   0.554   0.239
0.063   0.016


******************************************************************
**************
```

```
*****************************************************************
**************

                          ANNUAL TOTALS FOR YEAR     5
 ---------------------------------------------------------------
---------------
                                          INCHES          CU.
FEET     PERCENT
                                         --------
----------    -------
   PRECIPITATION                          29.11
295874.031    100.00

   RUNOFF                                  0.000
0.000      0.00

   EVAPOTRANSPIRATION                     18.696
190030.484     64.23

   DRAINAGE COLLECTED FROM LAYER  3        9.2296
93809.406     31.71

   PERC./LEAKAGE THROUGH LAYER  5          0.001378
14.008      0.00

   AVG. HEAD ON TOP OF LAYER  4            1.4827

   CHANGE IN WATER STORAGE                 1.183
12020.240      4.06

   SOIL WATER AT START OF YEAR           170.591
1733884.250

   SOIL WATER AT END OF YEAR             172.816
1756501.120

   SNOW WATER AT START OF YEAR             1.793
18225.107      6.16

   SNOW WATER AT END OF YEAR               0.751
7628.526      2.58

   ANNUAL WATER BUDGET BALANCE             0.0000          -
0.092      0.00


*****************************************************************
**************
```

```
*****************************************************************
**************

                    MONTHLY TOTALS (IN INCHES) FOR YEAR    6
 ---------------------------------------------------------------
---------------

                                      JAN/JUL FEB/AUG MAR/SEP APR/OCT
MAY/NOV JUN/DEC
                                      ------- ------- ------- -------
------- -------

 PRECIPITATION                         0.80    1.02    2.30    2.75
3.91    1.39
                                       4.52    3.27    3.87    1.54
3.17    1.03

 RUNOFF                                0.000   0.000   0.000   0.000
0.000   0.000
                                       0.000   0.000   0.000   0.000
0.000   0.000

 EVAPOTRANSPIRATION                    0.383   0.500   0.486   0.209
3.960   1.455
                                       3.509   2.590   3.378   0.720
1.182   0.510

 LATERAL DRAINAGE COLLECTED            0.0050  0.0011  0.0245  0.6092
1.6155  2.7606
   FROM LAYER  3                       2.3680  1.1265  0.7868  0.6554
0.6597  0.9792

 PERCOLATION/LEAKAGE THROUGH           0.0000  0.0000  0.0000  0.0001
0.0002  0.0004
   LAYER  5                            0.0003  0.0002  0.0001  0.0001
0.0001  0.0001


 ---------------------------------------------------------------
---------------
                    MONTHLY SUMMARIES FOR DAILY HEADS (INCHES)
 ---------------------------------------------------------------
---------------


 AVERAGE DAILY HEAD ON                 0.009   0.002   0.047   1.195
3.067   5.415
   TOP OF LAYER  4                     4.495   2.139   1.543   1.244
1.294   1.859
```

```
 STD. DEVIATION OF DAILY          0.004   0.001   0.087   0.498
0.554   0.437
   HEAD ON TOP OF LAYER  4        1.269   0.424   0.455   0.504
0.868   0.663


*****************************************************************
**************


*****************************************************************
**************

                            ANNUAL TOTALS FOR YEAR    6
 ---------------------------------------------------------------
---------------
                                          INCHES          CU.
FEET     PERCENT
                                         --------
----------    -------
   PRECIPITATION                          29.57
300549.562    100.00

   RUNOFF                                  0.000
0.000      0.00

   EVAPOTRANSPIRATION                     18.885
191946.109     63.87

   DRAINAGE COLLECTED FROM LAYER  3       11.5917
117817.578     39.20

   PERC./LEAKAGE THROUGH LAYER  5          0.001714
17.418      0.01

   AVG. HEAD ON TOP OF LAYER  4            1.8592

   CHANGE IN WATER STORAGE                -0.908          -
9231.592     -3.07

   SOIL WATER AT START OF YEAR           172.816
1756501.120

   SOIL WATER AT END OF YEAR             171.693
1745083.000

   SNOW WATER AT START OF YEAR             0.751
7628.526      2.54
```

```
   SNOW WATER AT END OF YEAR                    0.966
9814.995      3.27

   ANNUAL WATER BUDGET BALANCE                  0.0000
0.034      0.00


*****************************************************************
**************


*****************************************************************
**************

                    MONTHLY TOTALS (IN INCHES) FOR YEAR    7
 ---------------------------------------------------------------
---------------

                                     JAN/JUL FEB/AUG MAR/SEP APR/OCT
MAY/NOV JUN/DEC
                                     ------- ------- ------- -------
------- -------

 PRECIPITATION                        0.70    0.54    1.87    2.47
4.50    6.03
                                      5.57    2.56    2.03    3.90
1.25    0.79

 RUNOFF                               0.000   0.000   0.000   0.000
0.000   0.000
                                      0.000   0.000   0.000   0.000
0.000   0.000

 EVAPOTRANSPIRATION                   0.388   0.353   0.513   0.441
3.993   4.755
                                      3.574   2.268   1.205   1.883
0.375   0.368

 LATERAL DRAINAGE COLLECTED           0.2498  0.0573  0.2015  0.6377
0.7709  2.2271
   FROM LAYER  3                      2.3178  2.3333  0.7843  0.3749
1.5398  0.6496

 PERCOLATION/LEAKAGE THROUGH          0.0000  0.0000  0.0000  0.0001
0.0001  0.0003
   LAYER  5                           0.0003  0.0003  0.0001  0.0001
0.0002  0.0001
```

```
-----------------------------------------------------------------
---------------
                    MONTHLY SUMMARIES FOR DAILY HEADS (INCHES)
-----------------------------------------------------------------
---------------


 AVERAGE DAILY HEAD ON              0.474   0.120   0.383   1.251
1.463   4.369
   TOP OF LAYER  4                  4.400   4.430   1.539   0.712
3.021   1.233

 STD. DEVIATION OF DAILY            0.195   0.045   0.534   0.095
0.398   0.770
   HEAD ON TOP OF LAYER  4          0.550   0.704   0.613   0.335
0.606   0.507


*****************************************************************
**************


*****************************************************************
**************

                           ANNUAL TOTALS FOR YEAR    7
-----------------------------------------------------------------
---------------
                                          INCHES          CU.
FEET     PERCENT
                                         --------
----------    -------
   PRECIPITATION                          32.21
327382.500    100.00

   RUNOFF                                  0.000
0.000      0.00

   EVAPOTRANSPIRATION                     20.116
204462.016     62.45

   DRAINAGE COLLECTED FROM LAYER  3       12.1440
123431.789     37.70

   PERC./LEAKAGE THROUGH LAYER  5          0.001804
18.335      0.01

   AVG. HEAD ON TOP OF LAYER  4            1.9495
```

```
   CHANGE IN WATER STORAGE                    -0.052          -
529.856     -0.16

   SOIL WATER AT START OF YEAR               171.693
1745083.000

   SOIL WATER AT END OF YEAR                 172.272
1750968.000

   SNOW WATER AT START OF YEAR                 0.966
9814.995      3.00

   SNOW WATER AT END OF YEAR                   0.335
3400.236      1.04

   ANNUAL WATER BUDGET BALANCE                 0.0000
0.218      0.00


*****************************************************************
**************


*****************************************************************
**************

                    MONTHLY TOTALS (IN INCHES) FOR YEAR    8
 ---------------------------------------------------------------
---------------

                                   JAN/JUL FEB/AUG MAR/SEP APR/OCT
MAY/NOV JUN/DEC
                                   ------- ------- ------- -------
------- -------

 PRECIPITATION                      0.84    0.33    2.47    1.25
2.67    4.55
                                    4.53    4.01    2.82    1.78
0.85    1.35

 RUNOFF                             0.000   0.000   0.000   0.000
0.000   0.000
                                    0.000   0.000   0.000   0.000
0.000   0.000

 EVAPOTRANSPIRATION                 0.632   0.674   0.461   0.044
```

```
3.004   4.816
                                    3.056   3.789   2.467   1.883
0.771   0.336

 LATERAL DRAINAGE COLLECTED         0.1563  0.0365  0.2093  0.8317
1.3262  1.5421
   FROM LAYER  3                    0.5007  0.6989  0.4945  0.3441
0.0952  0.0246

 PERCOLATION/LEAKAGE THROUGH        0.0000  0.0000  0.0000  0.0001
0.0002  0.0002
   LAYER  5                         0.0001  0.0001  0.0001  0.0001
0.0000  0.0000


 ------------------------------------------------------------------
---------------
                     MONTHLY SUMMARIES FOR DAILY HEADS (INCHES)
 ------------------------------------------------------------------
---------------


 AVERAGE DAILY HEAD ON              0.297   0.074   0.397   1.632
2.518   3.025
   TOP OF LAYER  4                  0.951   1.327   0.970   0.653
0.187   0.047

 STD. DEVIATION OF DAILY            0.122   0.029   0.506   0.418
0.706   0.838
   HEAD ON TOP OF LAYER  4          0.382   0.535   0.313   0.176
0.074   0.019


*****************************************************************
**************



*****************************************************************
**************

                            ANNUAL TOTALS FOR YEAR    8
 ------------------------------------------------------------------
---------------
                                          INCHES          CU.
FEET     PERCENT
                                         --------
----------    -------
   PRECIPITATION                           27.45
279001.812    100.00
```

```
   RUNOFF                                          0.000
0.000       0.00

   EVAPOTRANSPIRATION                             21.932
222917.094      79.90

   DRAINAGE COLLECTED FROM LAYER  3                6.2603
63629.672      22.81

   PERC./LEAKAGE THROUGH LAYER  5                  0.000976
9.922       0.00

   AVG. HEAD ON TOP OF LAYER  4                    1.0064

   CHANGE IN WATER STORAGE                        -0.743          -
7554.829      -2.71

   SOIL WATER AT START OF YEAR                   172.272
1750968.000

   SOIL WATER AT END OF YEAR                     170.849
1736504.250

   SNOW WATER AT START OF YEAR                     0.335
3400.236       1.22

   SNOW WATER AT END OF YEAR                       1.014
10309.131       3.70

   ANNUAL WATER BUDGET BALANCE                     0.0000          -
0.048       0.00


*****************************************************************
**************


*****************************************************************
**************

                    MONTHLY TOTALS (IN INCHES) FOR YEAR    9
 ---------------------------------------------------------------
---------------

                                   JAN/JUL FEB/AUG MAR/SEP APR/OCT
MAY/NOV JUN/DEC
                                   ------- ------- ------- -------
```

```
------- -------

 PRECIPITATION                      2.37    0.35    2.02    2.08
3.03    3.57
                                    2.57    2.42    3.75    1.03
2.53    2.17

 RUNOFF                             0.000   0.000   0.000   0.000
0.000   0.000
                                    0.000   0.000   0.000   0.000
0.000   0.000

 EVAPOTRANSPIRATION                 0.413   0.392   0.426   0.262
3.116   2.763
                                    2.551   1.560   2.742   2.192
0.760   0.375

 LATERAL DRAINAGE COLLECTED         0.0059  0.0014  0.0004  0.3393
1.3815  2.6488
   FROM LAYER  3                    2.2057  0.7607  0.1824  0.4641
0.3567  0.3719

 PERCOLATION/LEAKAGE THROUGH        0.0000  0.0000  0.0000  0.0001
0.0002  0.0004
   LAYER  5                         0.0003  0.0001  0.0000  0.0001
0.0001  0.0001


 ------------------------------------------------------------------
---------------
                    MONTHLY SUMMARIES FOR DAILY HEADS (INCHES)
 ------------------------------------------------------------------
---------------


 AVERAGE DAILY HEAD ON              0.011   0.003   0.001   0.666
2.623   5.196
   TOP OF LAYER  4                  4.187   1.444   0.358   0.881
0.700   0.706

 STD. DEVIATION OF DAILY            0.005   0.001   0.000   0.567
0.856   0.369
   HEAD ON TOP OF LAYER  4          0.603   0.593   0.140   0.440
0.201   0.199


*****************************************************************
**************
```

```
*****************************************************************
**************

                          ANNUAL TOTALS FOR YEAR     9
 ---------------------------------------------------------------
---------------
                                          INCHES          CU.
FEET      PERCENT
                                         --------
----------    -------
   PRECIPITATION                          27.89
283474.000    100.00

   RUNOFF                                  0.000
0.000       0.00

   EVAPOTRANSPIRATION                     17.551
178384.344      62.93

   DRAINAGE COLLECTED FROM LAYER  3        8.7187
88616.969      31.26

   PERC./LEAKAGE THROUGH LAYER  5          0.001300
13.216       0.00

   AVG. HEAD ON TOP OF LAYER  4            1.3979

   CHANGE IN WATER STORAGE                 1.619
16459.461       5.81

   SOIL WATER AT START OF YEAR           170.849
1736504.250

   SOIL WATER AT END OF YEAR             171.432
1742434.120

   SNOW WATER AT START OF YEAR             1.014
10309.131       3.64

   SNOW WATER AT END OF YEAR               2.050
20838.713       7.35

   ANNUAL WATER BUDGET BALANCE             0.0000
0.030       0.00


*****************************************************************
**************
```

```
*****************************************************************
**************

                    MONTHLY TOTALS (IN INCHES) FOR YEAR   10
 ---------------------------------------------------------------
---------------

                                      JAN/JUL FEB/AUG MAR/SEP APR/OCT
MAY/NOV JUN/DEC
                                      ------- ------- ------- -------
------- -------

 PRECIPITATION                         1.23    0.49    2.43    2.43
1.99    2.97
                                       1.98    6.68    3.82    2.35
1.16    1.17

 RUNOFF                                0.000   0.000   0.000   0.000
0.000   0.000
                                       0.000   0.000   0.000   0.000
0.000   0.000

 EVAPOTRANSPIRATION                    0.354   0.465   0.587   0.313
2.163   3.182
                                       1.731   3.964   2.931   1.789
0.389   0.324

 LATERAL DRAINAGE COLLECTED            0.1030  0.0236  0.0535  0.9023
1.3738  2.5771
   FROM LAYER  3                       1.8061  0.5225  1.0797  1.8576
1.2522  0.3219

 PERCOLATION/LEAKAGE THROUGH           0.0000  0.0000  0.0000  0.0001
0.0002  0.0004
   LAYER  5                            0.0003  0.0001  0.0002  0.0003
0.0002  0.0001


 ---------------------------------------------------------------
---------------
                    MONTHLY SUMMARIES FOR DAILY HEADS (INCHES)
 ---------------------------------------------------------------
---------------


 AVERAGE DAILY HEAD ON                 0.195   0.050   0.102   1.770
2.608   5.055
   TOP OF LAYER  4                     3.429   0.992   2.118   3.527
2.456   0.611
```

```
 STD. DEVIATION OF DAILY          0.080   0.019   0.146   0.435
0.542   0.486
   HEAD ON TOP OF LAYER  4        1.358   0.223   0.554   0.320
0.959   0.251

*****************************************************************
**************


*****************************************************************
**************

                          ANNUAL TOTALS FOR YEAR   10
 ---------------------------------------------------------------
---------------
                                          INCHES          CU.
FEET     PERCENT
                                         --------
----------    -------
   PRECIPITATION                          28.70
291706.844    100.00

   RUNOFF                                  0.000
0.000      0.00

   EVAPOTRANSPIRATION                     18.192
184906.094     63.39

   DRAINAGE COLLECTED FROM LAYER  3       11.8734
120680.727     41.37

   PERC./LEAKAGE THROUGH LAYER  5          0.001762
17.912      0.01

   AVG. HEAD ON TOP OF LAYER  4            1.9094

   CHANGE IN WATER STORAGE                -1.367        -
13897.956     -4.76

   SOIL WATER AT START OF YEAR           171.432
1742434.120

   SOIL WATER AT END OF YEAR             171.269
1740777.370

   SNOW WATER AT START OF YEAR             2.050
20838.713      7.14
```

```
   SNOW WATER AT END OF YEAR                    0.846
8597.432       2.95

   ANNUAL WATER BUDGET BALANCE                  0.0000
0.061       0.00


*****************************************************************
**************


*****************************************************************
**************

          AVERAGE MONTHLY VALUES IN INCHES FOR YEARS    1 THROUGH
10
 ---------------------------------------------------------------
---------------

                            JAN/JUL  FEB/AUG  MAR/SEP  APR/OCT
MAY/NOV  JUN/DEC
                            -------  -------  -------  -------
-------  -------
   PRECIPITATION
   -------------
     TOTALS                   1.09     0.72     1.81     2.15
3.52     4.53
                              3.72     3.43     3.13     1.54
1.61     1.47

     STD. DEVIATIONS          0.54     0.33     0.54     1.22
1.36     2.13
                              1.39     1.52     0.69     0.96
0.99     0.61

   RUNOFF
   ------
     TOTALS                   0.000    0.000    0.000    0.000
0.000    0.000
                              0.000    0.000    0.000    0.000
0.000    0.000

     STD. DEVIATIONS          0.000    0.000    0.000    0.000
0.000    0.000
                              0.000    0.000    0.000    0.000
0.000    0.000
```

```
   EVAPOTRANSPIRATION
   ------------------
     TOTALS                  0.416    0.485    0.496    0.333
3.287    3.646
                             3.082    2.667    2.549    1.352
0.707    0.387

     STD. DEVIATIONS         0.101    0.107    0.084    0.250
0.938    1.146
                             0.973    1.266    0.609    0.576
0.297    0.060

   LATERAL DRAINAGE COLLECTED FROM LAYER  3
   ----------------------------------------
     TOTALS                  0.0712   0.0164   0.0873   0.6211
1.1885   2.1602
                             1.7514   1.2815   0.8858   0.6092
0.4491   0.2623

     STD. DEVIATIONS         0.0824   0.0190   0.0911   0.3283
0.2741   0.4317
                             0.7339   0.8687   0.6549   0.4645
0.5345   0.3272

   PERCOLATION/LEAKAGE THROUGH LAYER  5
   -------------------------------------
     TOTALS                  0.0000   0.0000   0.0000   0.0001
0.0002   0.0003
                             0.0003   0.0002   0.0001   0.0001
0.0001   0.0000

     STD. DEVIATIONS         0.0000   0.0000   0.0000   0.0000
0.0000   0.0001
                             0.0001   0.0001   0.0001   0.0001
0.0001   0.0000


 ------------------------------------------------------------------
---------------
                AVERAGES OF MONTHLY AVERAGED DAILY HEADS (INCHES)
 ------------------------------------------------------------------
---------------


   DAILY AVERAGE HEAD ON TOP OF LAYER  4
   -------------------------------------
     AVERAGES                0.1352   0.0342   0.1657   1.2184
2.2562   4.2376
                             3.3248   2.4327   1.7376   1.1565
0.8809   0.4979

     STD. DEVIATIONS         0.1565   0.0396   0.1729   0.6440
```

```
0.5203   0.8469
                                 1.3931   1.6491   1.2846   0.8817
1.0485   0.6212

*****************************************************************
**************



*****************************************************************
**************

      AVERAGE ANNUAL TOTALS & (STD. DEVIATIONS) FOR YEARS    1
THROUGH   10
 ---------------------------------------------------------------
---------------
                                          INCHES            CU. FEET
PERCENT
                                   -------------------
-------------   ---------
  PRECIPITATION                    28.72    (   2.922)     291930.5
100.00

  RUNOFF                            0.000   (  0.0000)
0.00      0.000

  EVAPOTRANSPIRATION               19.409   (  2.0073)
197271.31     67.575

  LATERAL DRAINAGE COLLECTED        9.38382 (  2.60700)
95377.125   32.67118
    FROM LAYER  3

  PERCOLATION/LEAKAGE THROUGH       0.00140 (  0.00037)
14.244     0.00488
    LAYER  5

  AVERAGE HEAD ON TOP               1.506 (    0.418)
    OF LAYER  4

  CHANGE IN WATER STORAGE          -0.072   (  0.9980)       -
732.30     -0.251


*****************************************************************
**************
```

```
*****************************************************************
*************

                 PEAK DAILY VALUES FOR YEARS    1 THROUGH   10
    ------------------------------------------------------------
-----------
                                                  (INCHES)
(CU. FT.)
                                                 ----------
-------------
       PRECIPITATION                               3.44
34964.160

       RUNOFF                                      0.000
0.0000

       DRAINAGE COLLECTED FROM LAYER  3            0.10285
1045.35596

       PERCOLATION/LEAKAGE THROUGH LAYER  5        0.000014
0.14548

       AVERAGE HEAD ON TOP OF LAYER  4             6.053

       MAXIMUM HEAD ON TOP OF LAYER  4             8.453

       LOCATION OF MAXIMUM HEAD IN LAYER  3
             (DISTANCE FROM DRAIN)                30.1 FEET

       SNOW WATER                                  4.52
45910.6602


       MAXIMUM VEG. SOIL WATER (VOL/VOL)                    0.4630

       MINIMUM VEG. SOIL WATER (VOL/VOL)                    0.1160

        ***  Maximum heads are computed using McEnroe's
equations.  ***

            Reference:  Maximum Saturated Depth over Landfill
Liner
                        by Bruce M. McEnroe, University of
Kansas
                        ASCE Journal of Environmental
Engineering
                        Vol. 119, No. 2, March 1993, pp. 262-
270.
```

****
****

FINAL WATER STORAGE AT END OF YEAR 10

LAYER	(INCHES)	(VOL/VOL)
1	2.6989	0.2249
2	157.6800	0.2920
3	0.6420	0.0535
4	0.0000	0.0000
5	10.2480	0.4270
SNOW WATER	0.846	

****
****

****
****

No waste?

High peak daily head.

```
******************************************************************
*************

******************************************************************
*************
 **
**
 **
**
 **                HYDROLOGIC EVALUATION OF LANDFILL PERFORMANCE
**
 **                  HELP MODEL VERSION 3.07  (1 NOVEMBER 1997)
**
 **                    DEVELOPED BY ENVIRONMENTAL LABORATORY
**
 **                      USAE WATERWAYS EXPERIMENT STATION
**
 **               FOR USEPA RISK REDUCTION ENGINEERING LABORATORY
**
 **
**
 **
**

******************************************************************
*************

******************************************************************
*************


 PRECIPITATION DATA FILE:     c:\download\Phase6.D4
 TEMPERATURE DATA FILE:       c:\download\Phase6.D7
 SOLAR RADIATION DATA FILE:   c:\download\Phase6.D13
 EVAPOTRANSPIRATION DATA:     c:\download\Phase6.D11
 SOIL AND DESIGN DATA FILE:   c:\download\Phase6.D10
 OUTPUT DATA FILE:            c:\download\Phase6.OUT


 TIME:  10:20     DATE:   5/31/2013


******************************************************************
*************
```

TITLE: Regional Landfill Phase 6

****
****

NOTE: INITIAL MOISTURE CONTENT OF THE LAYERS AND SNOW WATER WERE
COMPUTED AS NEARLY STEADY-STATE VALUES BY THE PROGRAM.

LAYER 1

TYPE 2 - LATERAL DRAINAGE LAYER
MATERIAL TEXTURE NUMBER 1

THICKNESS	=	12.00	INCHES
POROSITY	=	0.4170	VOL/VOL
FIELD CAPACITY	=	0.0450	VOL/VOL
WILTING POINT	=	0.0180	VOL/VOL
INITIAL SOIL WATER CONTENT	=	0.1129	VOL/VOL
EFFECTIVE SAT. HYD. COND.	=	0.999999978000E-02	CM/SEC
SLOPE	=	3.00	PERCENT
DRAINAGE LENGTH	=	100.0	FEET

LAYER 2

TYPE 4 - FLEXIBLE MEMBRANE LINER
MATERIAL TEXTURE NUMBER 35

THICKNESS	=	0.06	INCHES
POROSITY	=	0.0000	VOL/VOL
FIELD CAPACITY	=	0.0000	VOL/VOL
WILTING POINT	=	0.0000	VOL/VOL
INITIAL SOIL WATER CONTENT	=	0.0000	VOL/VOL
EFFECTIVE SAT. HYD. COND.	=	0.199999996000E-12	CM/SEC
FML PINHOLE DENSITY	=	1.00	HOLES/ACRE
FML INSTALLATION DEFECTS	=	4.00	HOLES/ACRE
FML PLACEMENT QUALITY	=	3 - GOOD	

LAYER 3

TYPE 3 - BARRIER SOIL LINER
MATERIAL TEXTURE NUMBER 16

THICKNESS	=	24.00	INCHES
POROSITY	=	0.4270	VOL/VOL
FIELD CAPACITY	=	0.4180	VOL/VOL
WILTING POINT	=	0.3670	VOL/VOL
INITIAL SOIL WATER CONTENT	=	0.4270	VOL/VOL
EFFECTIVE SAT. HYD. COND.	=	0.100000001000E-06	CM/SEC

GENERAL DESIGN AND EVAPORATIVE ZONE DATA

NOTE: SCS RUNOFF CURVE NUMBER WAS COMPUTED FROM DEFAULT SOIL DATA BASE USING SOIL TEXTURE # 1 WITH BARE GROUND CONDITIONS, A SURFACE SLOPE OF 3.% AND A SLOPE LENGTH OF 100. FEET.

SCS RUNOFF CURVE NUMBER	=	74.90	
FRACTION OF AREA ALLOWING RUNOFF	=	0.0	PERCENT
AREA PROJECTED ON HORIZONTAL PLANE	=	5.200	ACRES
EVAPORATIVE ZONE DEPTH	=	8.0	INCHES
INITIAL WATER IN EVAPORATIVE ZONE	=	1.011	INCHES
UPPER LIMIT OF EVAPORATIVE STORAGE	=	3.336	INCHES
LOWER LIMIT OF EVAPORATIVE STORAGE	=	0.144	INCHES
INITIAL SNOW WATER	=	0.998	INCHES
INITIAL WATER IN LAYER MATERIALS	=	11.603	INCHES
TOTAL INITIAL WATER	=	12.600	INCHES
TOTAL SUBSURFACE INFLOW	=	0.00	INCHES/YEAR

EVAPOTRANSPIRATION AND WEATHER DATA

NOTE: EVAPOTRANSPIRATION DATA WAS OBTAINED FROM
DULUTH MINNESOTA

STATION LATITUDE = 46.50 DEGREES

MAXIMUM LEAF AREA INDEX = 0.00
START OF GROWING SEASON (JULIAN DATE) = 144
END OF GROWING SEASON (JULIAN DATE) = 261
EVAPORATIVE ZONE DEPTH = 8.0
INCHES
AVERAGE ANNUAL WIND SPEED = 11.20 MPH
AVERAGE 1ST QUARTER RELATIVE HUMIDITY = 70.00 %
AVERAGE 2ND QUARTER RELATIVE HUMIDITY = 66.00 %
AVERAGE 3RD QUARTER RELATIVE HUMIDITY = 74.00 %
AVERAGE 4TH QUARTER RELATIVE HUMIDITY = 74.00 %

NOTE: PRECIPITATION DATA WAS SYNTHETICALLY GENERATED USING
COEFFICIENTS FOR DULUTH MINNESOTA

NORMAL MEAN MONTHLY PRECIPITATION (INCHES)

JAN/JUL	FEB/AUG	MAR/SEP	APR/OCT	MAY/NOV	JUN/DEC
1.20	0.90	1.78	2.16	3.15	3.96
3.96	4.12	3.26	2.21	1.69	1.29

NOTE: TEMPERATURE DATA WAS SYNTHETICALLY GENERATED USING
COEFFICIENTS FOR DULUTH MINNESOTA

NORMAL MEAN MONTHLY TEMPERATURE (DEGREES FAHRENHEIT)

JAN/JUL	FEB/AUG	MAR/SEP	APR/OCT	MAY/NOV	JUN/DEC
6.30	12.00	22.90	38.30	50.30	59.40
65.30	63.20	54.00	44.20	28.20	13.80

NOTE: SOLAR RADIATION DATA WAS SYNTHETICALLY GENERATED USING

COEFFICIENTS FOR DULUTH
MINNESOTA
AND STATION LATITUDE = 46.50 DEGREES

****
****

MONTHLY TOTALS (IN INCHES) FOR YEAR 1

	JAN/JUL	FEB/AUG	MAR/SEP	APR/OCT	MAY/NOV	JUN/DEC
PRECIPITATION	0.51	0.83	1.24	1.02	1.64	3.93
	3.41	3.48	2.98	0.90	2.99	0.77
RUNOFF	0.000	0.000	0.000	0.000	0.000	0.000
	0.000	0.000	0.000	0.000	0.000	0.000
EVAPOTRANSPIRATION	0.510	0.500	0.425	0.172	1.433	3.908
	1.970	3.326	1.915	0.522	1.098	0.478
LATERAL DRAINAGE COLLECTED	0.1244	0.0285	0.0083	0.1215	2.1559	1.0126
FROM LAYER 1	0.5694	0.9978	0.9912	0.6783	0.2807	0.4734
PERCOLATION/LEAKAGE THROUGH	0.0000	0.0000	0.0000	0.0000	0.0003	0.0002
LAYER 3	0.0001	0.0002	0.0002	0.0001	0.0000	0.0001

MONTHLY SUMMARIES FOR DAILY HEADS (INCHES)

```
 AVERAGE DAILY HEAD ON              0.236   0.060   0.016   0.238
4.089   1.986
   TOP OF LAYER  2                  1.081   1.894   1.944   1.288
0.551   0.899

 STD. DEVIATION OF DAILY            0.097   0.022   0.006   0.515
2.027   0.277
   HEAD ON TOP OF LAYER  2          0.210   0.352   0.704   0.494
0.090   0.278
```

****
****

****
****

```
                            ANNUAL TOTALS FOR YEAR    1
 ---------------------------------------------------------------------
---------------
                                          INCHES          CU.
FEET     PERCENT
                                         --------
----------    -------
   PRECIPITATION                          23.70
447361.219    100.00

   RUNOFF                                  0.000
0.000      0.00

   EVAPOTRANSPIRATION                     16.255
306837.656     68.59

   DRAINAGE COLLECTED FROM LAYER  1        7.4421
140476.406     31.40

   PERC./LEAKAGE THROUGH LAYER  3          0.001140
21.517      0.00

   AVG. HEAD ON TOP OF LAYER  2            1.1901

   CHANGE IN WATER STORAGE                 0.001
25.580      0.01

   SOIL WATER AT START OF YEAR            11.603
219015.687
```

SOIL WATER AT END OF YEAR 11.604
219041.281

SNOW WATER AT START OF YEAR 0.998
18829.518 4.21

SNOW WATER AT END OF YEAR 0.998
18829.518 4.21

ANNUAL WATER BUDGET BALANCE 0.0000
0.066 0.00

****
****

****
****

MONTHLY TOTALS (IN INCHES) FOR YEAR 2

	JAN/JUL	FEB/AUG	MAR/SEP	APR/OCT	MAY/NOV	JUN/DEC
PRECIPITATION	0.65	0.95	1.83	5.02	4.48	5.12
	3.67	1.18	4.03	1.03	0.50	2.51
RUNOFF	0.000	0.000	0.000	0.000	0.000	0.000
	0.000	0.000	0.000	0.000	0.000	0.000
EVAPOTRANSPIRATION	0.386	0.428	0.462	0.617	2.424	2.915
	2.513	0.434	2.433	0.925	0.819	0.349
LATERAL DRAINAGE COLLECTED	0.1254	0.0288	0.2432	2.8036	4.9017	2.7009

```
   FROM LAYER  1                    2.1982  0.7778  1.0092  0.7339
0.2323  0.0910

 PERCOLATION/LEAKAGE THROUGH        0.0000  0.0000  0.0000  0.0004
0.0007  0.0004
   LAYER  3                         0.0003  0.0001  0.0002  0.0001
0.0000  0.0000


 ----------------------------------------------------------------
---------------
                    MONTHLY SUMMARIES FOR DAILY HEADS (INCHES)
 ----------------------------------------------------------------
---------------


 AVERAGE DAILY HEAD ON              0.238   0.060   0.462   5.387
9.185   5.290
   TOP OF LAYER  2                  4.173   1.477   1.980   1.393
0.456   0.173

 STD. DEVIATION OF DAILY            0.098   0.023   0.795   3.783
1.542   1.896
   HEAD ON TOP OF LAYER  2          1.302   0.566   0.487   0.438
0.102   0.068


*****************************************************************
**************


*****************************************************************
**************

                           ANNUAL TOTALS FOR YEAR    2
 ----------------------------------------------------------------
---------------
                                          INCHES          CU.
FEET      PERCENT
                                         --------
----------    -------
   PRECIPITATION                           30.97
584589.750    100.00

   RUNOFF                                   0.000
0.000       0.00

   EVAPOTRANSPIRATION                      14.704
277546.937     47.48
```

```
   DRAINAGE COLLECTED FROM LAYER  1          15.8461
299110.187     51.17

   PERC./LEAKAGE THROUGH LAYER  3             0.002242
42.318      0.01

   AVG. HEAD ON TOP OF LAYER  2               2.5227

   CHANGE IN WATER STORAGE                    0.418
7890.204      1.35

   SOIL WATER AT START OF YEAR               11.604
219041.281

   SOIL WATER AT END OF YEAR                 11.237
212104.703

   SNOW WATER AT START OF YEAR                0.998
18829.518      3.22

   SNOW WATER AT END OF YEAR                  1.783
33656.297      5.76

   ANNUAL WATER BUDGET BALANCE                0.0000
0.097      0.00

*****************************************************************
**************

*****************************************************************
**************

                    MONTHLY TOTALS (IN INCHES) FOR YEAR    3
 ---------------------------------------------------------------
---------------

                                  JAN/JUL FEB/AUG MAR/SEP APR/OCT
MAY/NOV JUN/DEC
                                  ------- ------- ------- -------
------- -------

 PRECIPITATION                     1.30    0.56    0.82    0.74
6.23    9.47
                                   5.20    2.18    2.92    1.15
1.01    1.18
```

```
 RUNOFF                              0.000   0.000   0.000   0.000
0.000   0.000
                                     0.000   0.000   0.000   0.000
0.000   0.000

 EVAPOTRANSPIRATION                  0.485   0.571   0.670   0.413
4.132   4.418
                                     4.358   1.557   2.223   1.027
0.710   0.358

 LATERAL DRAINAGE COLLECTED          0.0222  0.0051  0.0015  0.1679
3.1779  2.3875
   FROM LAYER  1                     4.2326  1.4202  1.0511  0.4618
0.1684  0.0591

 PERCOLATION/LEAKAGE THROUGH         0.0000  0.0000  0.0000  0.0000
0.0004  0.0003
   LAYER  3                          0.0006  0.0002  0.0002  0.0001
0.0000  0.0000


 ------------------------------------------------------------------
---------------
                    MONTHLY SUMMARIES FOR DAILY HEADS (INCHES)
 ------------------------------------------------------------------
---------------


 AVERAGE DAILY HEAD ON               0.042   0.011   0.003   0.329
6.023   4.641
   TOP OF LAYER  2                   7.943   2.696   2.062   0.877
0.330   0.112

 STD. DEVIATION OF DAILY             0.017   0.004   0.001   0.365
1.824   2.664
   HEAD ON TOP OF LAYER  2           2.303   0.678   0.629   0.159
0.105   0.046


*****************************************************************
**************


*****************************************************************
**************

                          ANNUAL TOTALS FOR YEAR     3
 ------------------------------------------------------------------
---------------
```

```
                                                INCHES          CU.
FEET      PERCENT
                                               --------
----------     -------
   PRECIPITATION                                32.76
618377.875    100.00

   RUNOFF                                        0.000
0.000       0.00

   EVAPOTRANSPIRATION                           20.921
394912.969      63.86

   DRAINAGE COLLECTED FROM LAYER  1            13.1553
248318.766      40.16

   PERC./LEAKAGE THROUGH LAYER  3               0.001867
35.245       0.01

   AVG. HEAD ON TOP OF LAYER  2                 2.0892

   CHANGE IN WATER STORAGE                     -1.319          -
24889.225      -4.02

   SOIL WATER AT START OF YEAR                 11.237
212104.703

   SOIL WATER AT END OF YEAR                   10.879
205354.766

   SNOW WATER AT START OF YEAR                  1.783
33656.297       5.44

   SNOW WATER AT END OF YEAR                    0.822
15517.007       2.51

   ANNUAL WATER BUDGET BALANCE                  0.0000
0.080       0.00


*****************************************************************
**************

*****************************************************************
**************
```

MONTHLY TOTALS (IN INCHES) FOR YEAR 4

	JAN/JUL	FEB/AUG	MAR/SEP	APR/OCT	MAY/NOV	JUN/DEC
PRECIPITATION	1.30	0.82	1.74	1.50	3.81	3.92
	1.36	4.38	2.44	0.90	0.60	2.09
RUNOFF	0.000	0.000	0.000	0.000	0.000	0.000
	0.000	0.000	0.000	0.000	0.000	0.000
EVAPOTRANSPIRATION	0.286	0.605	0.395	0.101	2.888	3.071
	1.128	2.818	1.414	0.793	0.729	0.397
LATERAL DRAINAGE COLLECTED	0.0142	0.0033	0.0009	1.0145	3.2947	1.3630
FROM LAYER 1	0.8930	1.1450	0.9860	0.4714	0.1336	0.0406
PERCOLATION/LEAKAGE THROUGH	0.0000	0.0000	0.0000	0.0002	0.0005	0.0002
LAYER 3	0.0001	0.0002	0.0002	0.0001	0.0000	0.0000

MONTHLY SUMMARIES FOR DAILY HEADS (INCHES)

AVERAGE DAILY HEAD ON	0.027	0.007	0.002	1.990	6.203	2.674
TOP OF LAYER 2	1.695	2.174	1.934	0.895	0.262	0.077
STD. DEVIATION OF DAILY	0.011	0.003	0.001	1.133	2.795	0.761
HEAD ON TOP OF LAYER 2	0.671	1.014	0.433	0.351	0.079	0.032

****
****

****
****

ANNUAL TOTALS FOR YEAR 4

	INCHES	CU. FEET	PERCENT
PRECIPITATION	24.86	469257.562	100.00
RUNOFF	0.000	0.000	0.00
EVAPOTRANSPIRATION	14.624	276037.187	58.82
DRAINAGE COLLECTED FROM LAYER 1	9.3603	176684.609	37.65
PERC./LEAKAGE THROUGH LAYER 3	0.001380	26.042	0.01
AVG. HEAD ON TOP OF LAYER 2	1.4949		
CHANGE IN WATER STORAGE	0.875	16509.537	3.52
SOIL WATER AT START OF YEAR	10.879	205354.766	
SOIL WATER AT END OF YEAR	10.783	203534.687	
SNOW WATER AT START OF YEAR	0.822	15517.007	3.31
SNOW WATER AT END OF YEAR	1.793	33846.629	7.21
ANNUAL WATER BUDGET BALANCE	0.0000	0.199	0.00

****
****

****
****

MONTHLY TOTALS (IN INCHES) FOR YEAR 5

	JAN/JUL	FEB/AUG	MAR/SEP	APR/OCT	MAY/NOV	JUN/DEC
PRECIPITATION	1.17	1.36	1.38	2.26	2.94	4.38
	4.36	4.15	2.62	0.85	2.04	1.60
RUNOFF	0.000	0.000	0.000	0.000	0.000	0.000
	0.000	0.000	0.000	0.000	0.000	0.000
EVAPOTRANSPIRATION	0.322	0.358	0.534	0.444	2.462	3.404
	2.733	2.140	2.491	0.767	0.309	0.369
LATERAL DRAINAGE COLLECTED	0.0098	0.0022	0.9048	0.8658	3.1756	1.6724
FROM LAYER 1	1.6595	2.1303	0.8429	0.3292	0.2709	0.0965
PERCOLATION/LEAKAGE THROUGH	0.0000	0.0000	0.0001	0.0001	0.0004	0.0002
LAYER 3	0.0002	0.0003	0.0001	0.0001	0.0000	0.0000

MONTHLY SUMMARIES FOR DAILY HEADS (INCHES)

```
---------------

 AVERAGE DAILY HEAD ON              0.019   0.005   1.718   1.695
5.970   3.281
   TOP OF LAYER  2                  3.150   4.044   1.654   0.625
0.531   0.183

 STD. DEVIATION OF DAILY            0.008   0.002   1.357   1.105
2.609   0.770
   HEAD ON TOP OF LAYER  2          0.819   1.637   0.266   0.226
0.174   0.075


*****************************************************************
**************


*****************************************************************
**************

                           ANNUAL TOTALS FOR YEAR    5
 ---------------------------------------------------------------
---------------
                                          INCHES          CU.
FEET     PERCENT
                                         --------
----------    -------
   PRECIPITATION                          29.11
549480.375    100.00

   RUNOFF                                  0.000
0.000      0.00

   EVAPOTRANSPIRATION                     16.334
308312.406     56.11

   DRAINAGE COLLECTED FROM LAYER  1       11.9599
225754.828     41.09

   PERC./LEAKAGE THROUGH LAYER  3          0.001748
32.997      0.01

   AVG. HEAD ON TOP OF LAYER  2            1.9062

   CHANGE IN WATER STORAGE                 0.815
15380.084      2.80

   SOIL WATER AT START OF YEAR            10.783
203534.687
```

SOIL WATER AT END OF YEAR 12.640
238594.125

SNOW WATER AT START OF YEAR 1.793
33846.629 6.16

SNOW WATER AT END OF YEAR 0.751
14167.261 2.58

ANNUAL WATER BUDGET BALANCE 0.0000
0.013 0.00

****
****

****
****

MONTHLY TOTALS (IN INCHES) FOR YEAR 6

	JAN/JUL	FEB/AUG	MAR/SEP	APR/OCT	MAY/NOV	JUN/DEC
PRECIPITATION	0.80	1.02	2.30	2.75	3.91	1.39
	4.52	3.27	3.87	1.54	3.17	1.03
RUNOFF	0.000	0.000	0.000	0.000	0.000	0.000
	0.000	0.000	0.000	0.000	0.000	0.000
EVAPOTRANSPIRATION	0.383	0.500	0.682	0.729	3.526	1.350
	2.791	1.506	2.734	0.498	1.185	0.510
LATERAL DRAINAGE COLLECTED	0.0232	0.0053	0.8027	2.1998	3.0977	1.1238

```
   FROM LAYER  1                    0.8560  1.4926  1.8392  0.7142
1.6033  0.5265

 PERCOLATION/LEAKAGE THROUGH        0.0000  0.0000  0.0001  0.0003
0.0004  0.0002
   LAYER  3                         0.0001  0.0002  0.0003  0.0001
0.0002  0.0001


 ------------------------------------------------------------------
---------------
                    MONTHLY SUMMARIES FOR DAILY HEADS (INCHES)
 ------------------------------------------------------------------
---------------


 AVERAGE DAILY HEAD ON              0.044   0.011   1.487   4.266
5.842   2.205
   TOP OF LAYER  2                  1.625   2.833   3.608   1.356
3.145   1.000

 STD. DEVIATION OF DAILY            0.018   0.004   3.164   2.226
2.527   0.859
   HEAD ON TOP OF LAYER  2          1.115   0.570   0.933   0.383
1.113   0.409


******************************************************************
**************


******************************************************************
**************

                           ANNUAL TOTALS FOR YEAR     6
 ------------------------------------------------------------------
---------------
                                            INCHES          CU.
FEET     PERCENT
                                           --------
----------    -------
   PRECIPITATION                             29.57
558163.437    100.00

   RUNOFF                                     0.000
0.000      0.00

   EVAPOTRANSPIRATION                        16.395
309464.937     55.44
```

```
   DRAINAGE COLLECTED FROM LAYER  1          14.2842
269628.875     48.31

   PERC./LEAKAGE THROUGH LAYER  3             0.002070
39.069      0.01

   AVG. HEAD ON TOP OF LAYER  2               2.2852

   CHANGE IN WATER STORAGE                   -1.111        -
20969.535     -3.76

   SOIL WATER AT START OF YEAR               12.640
238594.125

   SOIL WATER AT END OF YEAR                 11.314
213564.016

   SNOW WATER AT START OF YEAR                0.751
14167.261      2.54

   SNOW WATER AT END OF YEAR                  0.966
18227.846      3.27

   ANNUAL WATER BUDGET BALANCE                0.0000
0.056      0.00

*****************************************************************
**************

*****************************************************************
**************

                    MONTHLY TOTALS (IN INCHES) FOR YEAR    7
 ---------------------------------------------------------------
---------------

                                   JAN/JUL FEB/AUG MAR/SEP APR/OCT
MAY/NOV JUN/DEC
                                   ------- ------- ------- -------
------- -------

 PRECIPITATION                      0.70    0.54    1.87    2.47
4.50    6.03
                                    5.57    2.56    2.03    3.90
1.25    0.79
```

```
 RUNOFF                              0.000   0.000   0.000   0.000
0.000   0.000
                                     0.000   0.000   0.000   0.000
0.000   0.000

 EVAPOTRANSPIRATION                  0.388   0.353   0.513   0.490
3.668   4.371
                                     2.852   1.928   0.892   1.832
0.375   0.369

 LATERAL DRAINAGE COLLECTED          0.1269  0.0291  0.0084  0.8051
3.7345  1.5022
   FROM LAYER  1                     2.9112  1.5892  0.5342  1.9970
0.8128  0.2081

 PERCOLATION/LEAKAGE THROUGH         0.0000  0.0000  0.0000  0.0001
0.0005  0.0002
   LAYER  3                          0.0004  0.0002  0.0001  0.0003
0.0001  0.0000


 ------------------------------------------------------------------
---------------
                    MONTHLY SUMMARIES FOR DAILY HEADS (INCHES)
 ------------------------------------------------------------------
---------------


 AVERAGE DAILY HEAD ON               0.241   0.061   0.016   1.576
7.027   2.947
   TOP OF LAYER  2                   5.502   3.017   1.048   3.791
1.594   0.395

 STD. DEVIATION OF DAILY             0.099   0.023   0.007   1.586
2.149   0.373
   HEAD ON TOP OF LAYER  2           2.321   0.892   0.247   1.730
0.633   0.162


*****************************************************************
**************


*****************************************************************
**************

                          ANNUAL TOTALS FOR YEAR     7
 ------------------------------------------------------------------
---------------
```

```
                                          INCHES          CU.
FEET     PERCENT
                                         --------
----------    -------
   PRECIPITATION                          32.21
607996.062    100.00

   RUNOFF                                  0.000
0.000      0.00

   EVAPOTRANSPIRATION                     18.030
340340.562     55.98

   DRAINAGE COLLECTED FROM LAYER  1       14.2588
269149.469     44.27

   PERC./LEAKAGE THROUGH LAYER  3          0.002054
38.764      0.01

   AVG. HEAD ON TOP OF LAYER  2            2.2679

   CHANGE IN WATER STORAGE                -0.081          -
1532.886     -0.25

   SOIL WATER AT START OF YEAR            11.314
213564.016

   SOIL WATER AT END OF YEAR              11.864
223944.250

   SNOW WATER AT START OF YEAR             0.966
18227.846      3.00

   SNOW WATER AT END OF YEAR               0.335
6314.723      1.04

   ANNUAL WATER BUDGET BALANCE             0.0000
0.136      0.00

*****************************************************************
**************

*****************************************************************
**************
```

MONTHLY TOTALS (IN INCHES) FOR YEAR 8

	JAN/JUL	FEB/AUG	MAR/SEP	APR/OCT	MAY/NOV	JUN/DEC
PRECIPITATION	0.84	0.33	2.47	1.25	2.67	4.55
	4.53	4.01	2.82	1.78	0.85	1.35
RUNOFF	0.000	0.000	0.000	0.000	0.000	0.000
	0.000	0.000	0.000	0.000	0.000	0.000
EVAPOTRANSPIRATION	0.632	0.674	0.462	0.049	2.915	3.832
	3.020	2.836	2.426	0.956	0.753	0.336
LATERAL DRAINAGE COLLECTED	0.0501	0.0117	0.0137	0.7036	2.4579	1.2395
FROM LAYER 1	0.6759	1.4940	0.8460	0.7978	0.5350	0.2620
PERCOLATION/LEAKAGE THROUGH	0.0000	0.0000	0.0000	0.0001	0.0003	0.0002
LAYER 3	0.0001	0.0002	0.0001	0.0001	0.0001	0.0000

MONTHLY SUMMARIES FOR DAILY HEADS (INCHES)

AVERAGE DAILY HEAD ON	0.095	0.024	0.026	1.380	4.654	2.432
TOP OF LAYER 2	1.283	2.836	1.660	1.515	1.050	0.497
STD. DEVIATION OF DAILY	0.039	0.009	0.090	0.679	2.194	0.318
HEAD ON TOP OF LAYER 2	0.540	0.536	0.384	0.287	0.247	0.204

****
****

****
****

ANNUAL TOTALS FOR YEAR 8

	INCHES	CU. FEET	PERCENT
PRECIPITATION	27.45	518146.187	100.00
RUNOFF	0.000	0.000	0.00
EVAPOTRANSPIRATION	18.891	356577.719	68.82
DRAINAGE COLLECTED FROM LAYER 1	9.0873	171531.328	33.10
PERC./LEAKAGE THROUGH LAYER 3	0.001372	25.898	0.00
AVG. HEAD ON TOP OF LAYER 2	1.4543		
CHANGE IN WATER STORAGE	-0.529	-9988.741	-1.93
SOIL WATER AT START OF YEAR	11.864	223944.250	
SOIL WATER AT END OF YEAR	10.655	201124.703	
SNOW WATER AT START OF YEAR	0.335	6314.723	1.22
SNOW WATER AT END OF YEAR	1.014	19145.527	3.70
ANNUAL WATER BUDGET BALANCE	0.0000	-0.027	0.00

****
****

****
****

MONTHLY TOTALS (IN INCHES) FOR YEAR 9

	JAN/JUL	FEB/AUG	MAR/SEP	APR/OCT	MAY/NOV	JUN/DEC
PRECIPITATION	2.37	0.35	2.02	2.08	3.03	3.57
	2.57	2.42	3.75	1.03	2.53	2.17
RUNOFF	0.000	0.000	0.000	0.000	0.000	0.000
	0.000	0.000	0.000	0.000	0.000	0.000
EVAPOTRANSPIRATION	0.413	0.392	0.426	0.655	2.742	2.347
	1.963	1.561	2.476	1.511	0.769	0.375
LATERAL DRAINAGE COLLECTED	0.0631	0.0145	0.0042	1.7561	2.7940	1.4406
FROM LAYER 1	1.4314	0.5564	0.4633	0.8857	0.8024	0.4560
PERCOLATION/LEAKAGE THROUGH	0.0000	0.0000	0.0000	0.0002	0.0004	0.0002
LAYER 3	0.0002	0.0001	0.0001	0.0001	0.0001	0.0001

MONTHLY SUMMARIES FOR DAILY HEADS (INCHES)

```
---------------

 AVERAGE DAILY HEAD ON              0.120   0.030   0.008   3.415
5.280   2.826
   TOP OF LAYER  2                  2.717   1.056   0.909   1.681
1.574   0.866

 STD. DEVIATION OF DAILY            0.049   0.011   0.003   2.078
2.178   1.255
   HEAD ON TOP OF LAYER  2          0.584   0.224   0.116   0.476
0.535   0.353


*****************************************************************
**************


*****************************************************************
**************

                           ANNUAL TOTALS FOR YEAR     9
 ---------------------------------------------------------------
---------------
                                            INCHES          CU.
FEET     PERCENT
                                           --------
----------    -------
   PRECIPITATION                             27.89
526451.687    100.00

   RUNOFF                                     0.000
0.000      0.00

   EVAPOTRANSPIRATION                        15.629
295004.062     56.04

   DRAINAGE COLLECTED FROM LAYER  1          10.6675
201359.953     38.25

   PERC./LEAKAGE THROUGH LAYER  3             0.001582
29.856      0.01

   AVG. HEAD ON TOP OF LAYER  2               1.7069

   CHANGE IN WATER STORAGE                    1.592
30057.854      5.71

   SOIL WATER AT START OF YEAR               10.655
201124.703
```

```
   SOIL WATER AT END OF YEAR                    11.211
211627.625

   SNOW WATER AT START OF YEAR                   1.014
19145.527      3.64

   SNOW WATER AT END OF YEAR                     2.050
38700.465      7.35

   ANNUAL WATER BUDGET BALANCE                   0.0000            -
0.001      0.00

*****************************************************************
**************
```

```
*****************************************************************
**************

                    MONTHLY TOTALS (IN INCHES) FOR YEAR   10
 ---------------------------------------------------------------
---------------

                                   JAN/JUL FEB/AUG MAR/SEP APR/OCT
MAY/NOV JUN/DEC
                                   ------- ------- ------- -------
------- -------

 PRECIPITATION                      1.23    0.49    2.43    2.43
1.99    2.97
                                    1.98    6.68    3.82    2.35
1.16    1.17

 RUNOFF                             0.000   0.000   0.000   0.000
0.000   0.000
                                    0.000   0.000   0.000   0.000
0.000   0.000

 EVAPOTRANSPIRATION                 0.354   0.465   0.588   0.753
1.992   2.191
                                    1.274   4.017   2.180   1.371
0.373   0.324

 LATERAL DRAINAGE COLLECTED         0.1099  0.0252  0.4911  2.0504
2.7854  1.4461
```

```
   FROM LAYER  1                    0.8479  1.3403  1.8770  2.0307
0.5760  0.1477

 PERCOLATION/LEAKAGE THROUGH        0.0000  0.0000  0.0001  0.0003
0.0004  0.0002
   LAYER  3                         0.0001  0.0002  0.0003  0.0003
0.0001  0.0000


 ------------------------------------------------------------------
---------------
                    MONTHLY SUMMARIES FOR DAILY HEADS (INCHES)
 ------------------------------------------------------------------
---------------


 AVERAGE DAILY HEAD ON              0.209   0.053   0.932   3.973
5.268   2.837
   TOP OF LAYER  2                  1.610   2.544   3.682   3.855
1.130   0.280

 STD. DEVIATION OF DAILY            0.086   0.020   0.987   2.525
2.135   0.605
   HEAD ON TOP OF LAYER  2          0.367   1.627   1.093   1.358
0.446   0.115


******************************************************************
**************



******************************************************************
**************

                           ANNUAL TOTALS FOR YEAR   10
 ------------------------------------------------------------------
---------------
                                          INCHES          CU.
FEET      PERCENT
                                         --------
----------    -------
   PRECIPITATION                           28.70
541741.250    100.00

   RUNOFF                                   0.000
0.000       0.00

   EVAPOTRANSPIRATION                      15.882
299792.625     55.34
```

```
   DRAINAGE COLLECTED FROM LAYER  1          13.7277
259124.953     47.83

   PERC./LEAKAGE THROUGH LAYER  3             0.002003
37.810      0.01

   AVG. HEAD ON TOP OF LAYER  2               2.1978

   CHANGE IN WATER STORAGE                   -0.912        -
17214.061     -3.18

   SOIL WATER AT START OF YEAR               11.211
211627.625

   SOIL WATER AT END OF YEAR                 11.504
217147.359

   SNOW WATER AT START OF YEAR                2.050
38700.465      7.14

   SNOW WATER AT END OF YEAR                  0.846
15966.657      2.95

   ANNUAL WATER BUDGET BALANCE                0.0000          -
0.076      0.00


*****************************************************************
**************


*****************************************************************
**************

          AVERAGE MONTHLY VALUES IN INCHES FOR YEARS    1 THROUGH
10
 ---------------------------------------------------------------
---------------

                            JAN/JUL  FEB/AUG  MAR/SEP  APR/OCT
MAY/NOV  JUN/DEC
                            -------  -------  -------  -------
-------  -------
   PRECIPITATION
   -------------
     TOTALS                   1.09     0.72     1.81     2.15
3.52     4.53
```

		3.72	3.43	3.13	1.54	
1.61	1.47					
STD. DEVIATIONS		0.54	0.33	0.54	1.22	
1.36	2.13					
		1.39	1.52	0.69	0.96	
0.99	0.61					

RUNOFF

TOTALS		0.000	0.000	0.000	0.000	
0.000	0.000					
		0.000	0.000	0.000	0.000	
0.000	0.000					
STD. DEVIATIONS		0.000	0.000	0.000	0.000	
0.000	0.000					
		0.000	0.000	0.000	0.000	
0.000	0.000					

EVAPOTRANSPIRATION

TOTALS		0.416	0.485	0.516	0.442	
2.818	3.181					
		2.460	2.212	2.118	1.020	
0.712	0.386					
STD. DEVIATIONS		0.101	0.107	0.102	0.258	
0.806	1.003					
		0.938	1.046	0.567	0.431	
0.294	0.061					

LATERAL DRAINAGE COLLECTED FROM LAYER 1

TOTALS		0.0669	0.0154	0.2479	1.2488	
3.1575	1.5889					
		1.6275	1.2944	1.0440	0.9100	
0.5415	0.2361					
STD. DEVIATIONS		0.0499	0.0114	0.3573	0.9041	
0.7573	0.5429					
		1.1817	0.4478	0.4726	0.6059	
0.4488	0.1851					

PERCOLATION/LEAKAGE THROUGH LAYER 3

TOTALS		0.0000	0.0000	0.0000	0.0002	
0.0004	0.0002					
		0.0002	0.0002	0.0002	0.0001	
0.0001	0.0000					
STD. DEVIATIONS		0.0000	0.0000	0.0001	0.0001	

```
0.0001   0.0001
                                0.0002   0.0001   0.0001   0.0001
0.0001   0.0000


 ------------------------------------------------------------------
---------------
                AVERAGES OF MONTHLY AVERAGED DAILY HEADS (INCHES)
 ------------------------------------------------------------------
---------------


   DAILY AVERAGE HEAD ON TOP OF LAYER  2
   -------------------------------------
     AVERAGES                   0.1270   0.0322   0.4669   2.4250
5.9542   3.1117
                                3.0780   2.4572   2.0480   1.7275
1.0623   0.4482

     STD. DEVIATIONS            0.0947   0.0241   0.6722   1.7400
1.4049   1.0562
                                2.2178   0.8500   0.9271   1.1503
0.8804   0.3514


*******************************************************************
**************



*******************************************************************
**************

      AVERAGE ANNUAL TOTALS & (STD. DEVIATIONS) FOR YEARS    1
THROUGH   10
 ------------------------------------------------------------------
---------------
                                        INCHES            CU. FEET
PERCENT
                                  -------------------
-------------   ---------
  PRECIPITATION                 .     28.72    (   2.922)     542156.6
100.00

  RUNOFF                                0.000   (  0.0000)
0.00      0.000

  EVAPOTRANSPIRATION                   16.766   (  1.9687)
316482.69     58.375

  LATERAL DRAINAGE COLLECTED           11.97891 (  2.73722)
```

```
226113.937   41.70639
    FROM LAYER  1

  PERCOLATION/LEAKAGE THROUGH     0.00175 (  0.00036)
32.952     0.00608
    LAYER  3

  AVERAGE HEAD ON TOP             1.912 (    0.434)
    OF LAYER  2

  CHANGE IN WATER STORAGE        -0.025   (  0.9559)       -
473.12     -0.087


*****************************************************************
**************
```

```
*****************************************************************
*************

                 PEAK DAILY VALUES FOR YEARS    1 THROUGH   10
    ------------------------------------------------------------
-----------
                                                  (INCHES)
(CU. FT.)
                                                 ----------
-------------
       PRECIPITATION                               3.44
64933.437

       RUNOFF                                      0.000
0.0000

       DRAINAGE COLLECTED FROM LAYER  1            0.21157
3993.61694

       PERCOLATION/LEAKAGE THROUGH LAYER  3        0.000027
0.51135

       AVERAGE HEAD ON TOP OF LAYER  2            12.000

       MAXIMUM HEAD ON TOP OF LAYER  2            14.925

       LOCATION OF MAXIMUM HEAD IN LAYER  1
             (DISTANCE FROM DRAIN)                40.0 FEET

       SNOW WATER                                  4.52
85262.6484


       MAXIMUM VEG. SOIL WATER (VOL/VOL)                    0.4170

       MINIMUM VEG. SOIL WATER (VOL/VOL)                    0.0180

        ***  Maximum heads are computed using McEnroe's
equations.  ***

             Reference:  Maximum Saturated Depth over Landfill
Liner
                         by Bruce M. McEnroe, University of
Kansas
                         ASCE Journal of Environmental
Engineering
                         Vol. 119, No. 2, March 1993, pp. 262-
270.
```

****
****

****
****

FINAL WATER STORAGE AT END OF YEAR 10

LAYER	(INCHES)	(VOL/VOL)
1	1.2559	0.1047
2	0.0000	0.0000
3	10.2480	0.4270
SNOW WATER	0.846	

****
****

****
****

```
******************************************************************
*************

******************************************************************
*************
 **
**
 **
**
 **              HYDROLOGIC EVALUATION OF LANDFILL PERFORMANCE
**
 **                HELP MODEL VERSION 3.07  (1 NOVEMBER 1997)
**
 **                 DEVELOPED BY ENVIRONMENTAL LABORATORY
**
 **                    USAE WATERWAYS EXPERIMENT STATION
**
 **             FOR USEPA RISK REDUCTION ENGINEERING LABORATORY
**
 **
**
 **
**

******************************************************************
*************

******************************************************************
*************


 PRECIPITATION DATA FILE:     c:\download\Phase7.D4
 TEMPERATURE DATA FILE:       c:\download\Phase7.D7
 SOLAR RADIATION DATA FILE:   c:\download\Phase7.D13
 EVAPOTRANSPIRATION DATA:     c:\download\Phase7.D11
 SOIL AND DESIGN DATA FILE:   c:\download\Phase7.D10
 OUTPUT DATA FILE:            c:\download\Phase7.OUT


 TIME:  10:27     DATE:   5/31/2013



******************************************************************
*************
```

TITLE: Regional Landfill Phase 7

****
****

NOTE: INITIAL MOISTURE CONTENT OF THE LAYERS AND SNOW WATER WERE
COMPUTED AS NEARLY STEADY-STATE VALUES BY THE PROGRAM.

LAYER 1

TYPE 2 - LATERAL DRAINAGE LAYER
MATERIAL TEXTURE NUMBER 1

THICKNESS	=	12.00	INCHES
POROSITY	=	0.4170	VOL/VOL
FIELD CAPACITY	=	0.0450	VOL/VOL
WILTING POINT	=	0.0180	VOL/VOL
INITIAL SOIL WATER CONTENT	=	0.1129	VOL/VOL
EFFECTIVE SAT. HYD. COND.	=	0.999999978000E-02	CM/SEC
SLOPE	=	3.00	PERCENT
DRAINAGE LENGTH	=	100.0	FEET

LAYER 2

TYPE 4 - FLEXIBLE MEMBRANE LINER
MATERIAL TEXTURE NUMBER 35

THICKNESS	=	0.06	INCHES
POROSITY	=	0.0000	VOL/VOL
FIELD CAPACITY	=	0.0000	VOL/VOL
WILTING POINT	=	0.0000	VOL/VOL
INITIAL SOIL WATER CONTENT	=	0.0000	VOL/VOL
EFFECTIVE SAT. HYD. COND.	=	0.199999996000E-12	CM/SEC
FML PINHOLE DENSITY	=	1.00	HOLES/ACRE
FML INSTALLATION DEFECTS	=	4.00	HOLES/ACRE
FML PLACEMENT QUALITY	=	3 - GOOD	

LAYER 3

TYPE 3 - BARRIER SOIL LINER
MATERIAL TEXTURE NUMBER 16

THICKNESS	=	24.00	INCHES
POROSITY	=	0.4270	VOL/VOL
FIELD CAPACITY	=	0.4180	VOL/VOL
WILTING POINT	=	0.3670	VOL/VOL
INITIAL SOIL WATER CONTENT	=	0.4270	VOL/VOL
EFFECTIVE SAT. HYD. COND.	=	0.100000001000E-06	CM/SEC

GENERAL DESIGN AND EVAPORATIVE ZONE DATA

NOTE: SCS RUNOFF CURVE NUMBER WAS COMPUTED FROM DEFAULT SOIL DATA BASE USING SOIL TEXTURE # 1 WITH BARE GROUND CONDITIONS, A SURFACE SLOPE OF 3.% AND A SLOPE LENGTH OF 100. FEET.

SCS RUNOFF CURVE NUMBER	=	74.90	
FRACTION OF AREA ALLOWING RUNOFF	=	0.0	PERCENT
AREA PROJECTED ON HORIZONTAL PLANE	=	3.000	ACRES
EVAPORATIVE ZONE DEPTH	=	8.0	INCHES
INITIAL WATER IN EVAPORATIVE ZONE	=	1.011	INCHES
UPPER LIMIT OF EVAPORATIVE STORAGE	=	3.336	INCHES
LOWER LIMIT OF EVAPORATIVE STORAGE	=	0.144	INCHES
INITIAL SNOW WATER	=	0.998	INCHES
INITIAL WATER IN LAYER MATERIALS	=	11.603	INCHES
TOTAL INITIAL WATER	=	12.600	INCHES
TOTAL SUBSURFACE INFLOW	=	0.00	INCHES/YEAR

EVAPOTRANSPIRATION AND WEATHER DATA

NOTE: EVAPOTRANSPIRATION DATA WAS OBTAINED FROM DULUTH MINNESOTA

STATION LATITUDE = 46.50 DEGREES

MAXIMUM LEAF AREA INDEX	=	0.00
START OF GROWING SEASON (JULIAN DATE)	=	144
END OF GROWING SEASON (JULIAN DATE)	=	261
EVAPORATIVE ZONE DEPTH	=	8.0 INCHES
AVERAGE ANNUAL WIND SPEED	=	11.20 MPH
AVERAGE 1ST QUARTER RELATIVE HUMIDITY	=	70.00 %
AVERAGE 2ND QUARTER RELATIVE HUMIDITY	=	66.00 %
AVERAGE 3RD QUARTER RELATIVE HUMIDITY	=	74.00 %
AVERAGE 4TH QUARTER RELATIVE HUMIDITY	=	74.00 %

NOTE: PRECIPITATION DATA WAS SYNTHETICALLY GENERATED USING COEFFICIENTS FOR DULUTH MINNESOTA

NORMAL MEAN MONTHLY PRECIPITATION (INCHES)

JAN/JUL	FEB/AUG	MAR/SEP	APR/OCT	MAY/NOV	JUN/DEC
1.20	0.90	1.78	2.16	3.15	3.96
3.96	4.12	3.26	2.21	1.69	1.29

NOTE: TEMPERATURE DATA WAS SYNTHETICALLY GENERATED USING COEFFICIENTS FOR DULUTH MINNESOTA

NORMAL MEAN MONTHLY TEMPERATURE (DEGREES FAHRENHEIT)

JAN/JUL	FEB/AUG	MAR/SEP	APR/OCT	MAY/NOV	JUN/DEC
6.30	12.00	22.90	38.30	50.30	59.40
65.30	63.20	54.00	44.20	28.20	13.80

NOTE: SOLAR RADIATION DATA WAS SYNTHETICALLY GENERATED USING

COEFFICIENTS FOR DULUTH
MINNESOTA
AND STATION LATITUDE = 46.50 DEGREES

****
****

MONTHLY TOTALS (IN INCHES) FOR YEAR 1

	JAN/JUL	FEB/AUG	MAR/SEP	APR/OCT	MAY/NOV	JUN/DEC
PRECIPITATION	0.51	0.83	1.24	1.02	1.64	3.93
	3.41	3.48	2.98	0.90	2.99	0.77
RUNOFF	0.000	0.000	0.000	0.000	0.000	0.000
	0.000	0.000	0.000	0.000	0.000	0.000
EVAPOTRANSPIRATION	0.510	0.500	0.425	0.172	1.433	3.908
	1.970	3.326	1.915	0.522	1.098	0.478
LATERAL DRAINAGE COLLECTED	0.1244	0.0285	0.0083	0.1215	2.1559	1.0126
FROM LAYER 1	0.5694	0.9978	0.9912	0.6783	0.2807	0.4734
PERCOLATION/LEAKAGE THROUGH	0.0000	0.0000	0.0000	0.0000	0.0003	0.0002
LAYER 3	0.0001	0.0002	0.0002	0.0001	0.0000	0.0001

MONTHLY SUMMARIES FOR DAILY HEADS (INCHES)

AVERAGE DAILY HEAD ON	0.236	0.060	0.016	0.238	4.089	1.986
TOP OF LAYER 2	1.081	1.894	1.944	1.288	0.551	0.899
STD. DEVIATION OF DAILY	0.097	0.022	0.006	0.515	2.027	0.277
HEAD ON TOP OF LAYER 2	0.210	0.352	0.704	0.494	0.090	0.278

****
****

****
****

ANNUAL TOTALS FOR YEAR 1

	INCHES	CU. FEET	PERCENT
PRECIPITATION	23.70	258093.031	100.00
RUNOFF	0.000	0.000	0.00
EVAPOTRANSPIRATION	16.255	177021.734	68.59
DRAINAGE COLLECTED FROM LAYER 1	7.4421	81044.078	31.40
PERC./LEAKAGE THROUGH LAYER 3	0.001140	12.414	0.00
AVG. HEAD ON TOP OF LAYER 2	1.1901		
CHANGE IN WATER STORAGE	0.001	14.758	0.01
SOIL WATER AT START OF YEAR	11.603	126355.211	

SOIL WATER AT END OF YEAR 11.604
126369.969

SNOW WATER AT START OF YEAR 0.998
10863.184 4.21

SNOW WATER AT END OF YEAR 0.998
10863.184 4.21

ANNUAL WATER BUDGET BALANCE 0.0000
0.038 0.00

****
****

****
****

MONTHLY TOTALS (IN INCHES) FOR YEAR 2

	JAN/JUL	FEB/AUG	MAR/SEP	APR/OCT	MAY/NOV	JUN/DEC
PRECIPITATION	0.65	0.95	1.83	5.02	4.48	5.12
	3.67	1.18	4.03	1.03	0.50	2.51
RUNOFF	0.000	0.000	0.000	0.000	0.000	0.000
	0.000	0.000	0.000	0.000	0.000	0.000
EVAPOTRANSPIRATION	0.386	0.428	0.462	0.617	2.424	2.915
	2.513	0.434	2.433	0.925	0.819	0.349
LATERAL DRAINAGE COLLECTED	0.1254	0.0288	0.2432	2.8036	4.9017	2.7009

```
   FROM LAYER  1                    2.1982  0.7778  1.0092  0.7339
0.2323  0.0910

 PERCOLATION/LEAKAGE THROUGH        0.0000  0.0000  0.0000  0.0004
0.0007  0.0004
   LAYER  3                         0.0003  0.0001  0.0002  0.0001
0.0000  0.0000


 ------------------------------------------------------------------
---------------
                    MONTHLY SUMMARIES FOR DAILY HEADS (INCHES)
 ------------------------------------------------------------------
---------------


 AVERAGE DAILY HEAD ON              0.238   0.060   0.462   5.387
9.185   5.290
   TOP OF LAYER  2                  4.173   1.477   1.980   1.393
0.456   0.173

 STD. DEVIATION OF DAILY            0.098   0.023   0.795   3.783
1.542   1.896
   HEAD ON TOP OF LAYER  2          1.302   0.566   0.487   0.438
0.102   0.068


*****************************************************************
**************



*****************************************************************
**************

                          ANNUAL TOTALS FOR YEAR    2
 ------------------------------------------------------------------
---------------
                                          INCHES          CU.
FEET     PERCENT
                                         --------
----------    -------
   PRECIPITATION                          30.97
337263.344    100.00

   RUNOFF                                  0.000
0.000      0.00

   EVAPOTRANSPIRATION                     14.704
160123.234     47.48
```

```
   DRAINAGE COLLECTED FROM LAYER  1          15.8461
172563.578     51.17

   PERC./LEAKAGE THROUGH LAYER  3             0.002242
24.414      0.01

   AVG. HEAD ON TOP OF LAYER  2               2.5227

   CHANGE IN WATER STORAGE                    0.418
4552.041      1.35

   SOIL WATER AT START OF YEAR               11.604
126369.969

   SOIL WATER AT END OF YEAR                 11.237
122368.102

   SNOW WATER AT START OF YEAR                0.998
10863.184      3.22

   SNOW WATER AT END OF YEAR                  1.783
19417.096      5.76

   ANNUAL WATER BUDGET BALANCE                0.0000
0.056      0.00

*****************************************************************
**************

*****************************************************************
**************

                    MONTHLY TOTALS (IN INCHES) FOR YEAR    3
 ---------------------------------------------------------------
---------------

                                   JAN/JUL FEB/AUG MAR/SEP APR/OCT
MAY/NOV JUN/DEC
                                   ------- ------- ------- -------
------- -------

 PRECIPITATION                      1.30    0.56    0.82    0.74
6.23    9.47
                                    5.20    2.18    2.92    1.15
1.01    1.18
```

```
 RUNOFF                              0.000   0.000   0.000   0.000
0.000   0.000
                                     0.000   0.000   0.000   0.000
0.000   0.000

 EVAPOTRANSPIRATION                  0.485   0.571   0.670   0.413
4.132   4.418
                                     4.358   1.557   2.223   1.027
0.710   0.358

 LATERAL DRAINAGE COLLECTED          0.0222  0.0051  0.0015  0.1679
3.1779  2.3875
   FROM LAYER  1                     4.2326  1.4202  1.0511  0.4618
0.1684  0.0591

 PERCOLATION/LEAKAGE THROUGH         0.0000  0.0000  0.0000  0.0000
0.0004  0.0003
   LAYER  3                          0.0006  0.0002  0.0002  0.0001
0.0000  0.0000


 ------------------------------------------------------------------
---------------
                    MONTHLY SUMMARIES FOR DAILY HEADS (INCHES)
 ------------------------------------------------------------------
---------------


 AVERAGE DAILY HEAD ON               0.042   0.011   0.003   0.329
6.023   4.641
   TOP OF LAYER  2                   7.943   2.696   2.062   0.877
0.330   0.112

 STD. DEVIATION OF DAILY             0.017   0.004   0.001   0.365
1.824   2.664
   HEAD ON TOP OF LAYER  2           2.303   0.678   0.629   0.159
0.105   0.046


*****************************************************************
**************


*****************************************************************
**************

                          ANNUAL TOTALS FOR YEAR     3
 ------------------------------------------------------------------
---------------
```

```
                                                INCHES          CU.
FEET     PERCENT
                                               --------
----------    -------
   PRECIPITATION                                32.76
356756.469    100.00

   RUNOFF                                        0.000
0.000      0.00

   EVAPOTRANSPIRATION                           20.921
227834.422     63.86

   DRAINAGE COLLECTED FROM LAYER  1            13.1553
143260.828     40.16

   PERC./LEAKAGE THROUGH LAYER  3               0.001867
20.334      0.01

   AVG. HEAD ON TOP OF LAYER  2                 2.0892

   CHANGE IN WATER STORAGE                     -1.319        -
14359.169     -4.02

   SOIL WATER AT START OF YEAR                 11.237
122368.102

   SOIL WATER AT END OF YEAR                   10.879
118473.906

   SNOW WATER AT START OF YEAR                  1.783
19417.096      5.44

   SNOW WATER AT END OF YEAR                    0.822
8952.120      2.51

   ANNUAL WATER BUDGET BALANCE                  0.0000
0.046      0.00


*****************************************************************
**************


*****************************************************************
**************
```

MONTHLY TOTALS (IN INCHES) FOR YEAR 4

	JAN/JUL	FEB/AUG	MAR/SEP	APR/OCT	MAY/NOV	JUN/DEC
PRECIPITATION	1.30	0.82	1.74	1.50	3.81	3.92
	1.36	4.38	2.44	0.90	0.60	2.09
RUNOFF	0.000	0.000	0.000	0.000	0.000	0.000
	0.000	0.000	0.000	0.000	0.000	0.000
EVAPOTRANSPIRATION	0.286	0.605	0.395	0.101	2.888	3.071
	1.128	2.818	1.414	0.793	0.729	0.397
LATERAL DRAINAGE COLLECTED	0.0142	0.0033	0.0009	1.0145	3.2947	1.3630
FROM LAYER 1	0.8930	1.1450	0.9860	0.4714	0.1336	0.0406
PERCOLATION/LEAKAGE THROUGH	0.0000	0.0000	0.0000	0.0002	0.0005	0.0002
LAYER 3	0.0001	0.0002	0.0002	0.0001	0.0000	0.0000

MONTHLY SUMMARIES FOR DAILY HEADS (INCHES)

AVERAGE DAILY HEAD ON	0.027	0.007	0.002	1.990	6.203	2.674
TOP OF LAYER 2	1.695	2.174	1.934	0.895	0.262	0.077
STD. DEVIATION OF DAILY	0.011	0.003	0.001	1.133	2.795	0.761
HEAD ON TOP OF LAYER 2	0.671	1.014	0.433	0.351	0.079	0.032

```
*****************************************************************
**************

*****************************************************************
**************

                          ANNUAL TOTALS FOR YEAR     4
 ---------------------------------------------------------------
---------------
                                          INCHES          CU.
FEET      PERCENT
                                         --------
----------    -------
   PRECIPITATION                          24.86
270725.531    100.00

   RUNOFF                                  0.000
0.000       0.00

   EVAPOTRANSPIRATION                     14.624
159252.234      58.82

   DRAINAGE COLLECTED FROM LAYER  1        9.3603
101933.430      37.65

   PERC./LEAKAGE THROUGH LAYER  3          0.001380
15.024       0.01

   AVG. HEAD ON TOP OF LAYER  2            1.4949

   CHANGE IN WATER STORAGE                 0.875
9524.734       3.52

   SOIL WATER AT START OF YEAR            10.879
118473.906

   SOIL WATER AT END OF YEAR              10.783
117423.859

   SNOW WATER AT START OF YEAR             0.822
8952.120       3.31

   SNOW WATER AT END OF YEAR               1.793
19526.902       7.21

   ANNUAL WATER BUDGET BALANCE             0.0000
0.115       0.00
```

```
*****************************************************************
**************
```

```
*****************************************************************
**************

                    MONTHLY TOTALS (IN INCHES) FOR YEAR    5
 ---------------------------------------------------------------
---------------

                                   JAN/JUL FEB/AUG MAR/SEP APR/OCT
MAY/NOV JUN/DEC
                                   ------- ------- ------- -------
------- -------

 PRECIPITATION                      1.17    1.36    1.38    2.26
2.94    4.38
                                    4.36    4.15    2.62    0.85
2.04    1.60

 RUNOFF                             0.000   0.000   0.000   0.000
0.000   0.000
                                    0.000   0.000   0.000   0.000
0.000   0.000

 EVAPOTRANSPIRATION                 0.322   0.358   0.534   0.444
2.462   3.404
                                    2.733   2.140   2.491   0.767
0.309   0.369

 LATERAL DRAINAGE COLLECTED         0.0098  0.0022  0.9048  0.8658
3.1756  1.6724
   FROM LAYER  1                    1.6595  2.1303  0.8429  0.3292
0.2709  0.0965

 PERCOLATION/LEAKAGE THROUGH        0.0000  0.0000  0.0001  0.0001
0.0004  0.0002
   LAYER  3                         0.0002  0.0003  0.0001  0.0001
0.0000  0.0000


 ---------------------------------------------------------------
---------------
                    MONTHLY SUMMARIES FOR DAILY HEADS (INCHES)
 ---------------------------------------------------------------
```

```
---------------

 AVERAGE DAILY HEAD ON              0.019   0.005   1.718   1.695
5.970   3.281
   TOP OF LAYER  2                  3.150   4.044   1.654   0.625
0.531   0.183

 STD. DEVIATION OF DAILY            0.008   0.002   1.357   1.105
2.609   0.770
   HEAD ON TOP OF LAYER  2          0.819   1.637   0.266   0.226
0.174   0.075

*****************************************************************
**************



*****************************************************************
**************

                          ANNUAL TOTALS FOR YEAR    5
 ---------------------------------------------------------------
---------------
                                          INCHES          CU.
FEET     PERCENT
                                         --------
----------    -------
   PRECIPITATION                          29.11
317007.906    100.00

   RUNOFF                                  0.000
0.000      0.00

   EVAPOTRANSPIRATION                     16.334
177872.562     56.11

   DRAINAGE COLLECTED FROM LAYER  1       11.9599
130243.172     41.09

   PERC./LEAKAGE THROUGH LAYER  3          0.001748
19.037      0.01

   AVG. HEAD ON TOP OF LAYER  2            1.9062

   CHANGE IN WATER STORAGE                 0.815
8873.126      2.80

   SOIL WATER AT START OF YEAR            10.783
117423.859
```

SOIL WATER AT END OF YEAR 12.640
137650.469

SNOW WATER AT START OF YEAR 1.793
19526.902 6.16

SNOW WATER AT END OF YEAR 0.751
8173.420 2.58

ANNUAL WATER BUDGET BALANCE 0.0000
0.007 0.00

****
****

****
****

MONTHLY TOTALS (IN INCHES) FOR YEAR 6

	JAN/JUL	FEB/AUG	MAR/SEP	APR/OCT	MAY/NOV	JUN/DEC
PRECIPITATION	0.80	1.02	2.30	2.75	3.91	1.39
	4.52	3.27	3.87	1.54	3.17	1.03
RUNOFF	0.000	0.000	0.000	0.000	0.000	0.000
	0.000	0.000	0.000	0.000	0.000	0.000
EVAPOTRANSPIRATION	0.383	0.500	0.682	0.729	3.526	1.350
	2.791	1.506	2.734	0.498	1.185	0.510
LATERAL DRAINAGE COLLECTED	0.0232	0.0053	0.8027	2.1998	3.0977	1.1238

```
   FROM LAYER  1                    0.8560  1.4926  1.8392  0.7142
1.6033  0.5265

 PERCOLATION/LEAKAGE THROUGH        0.0000  0.0000  0.0001  0.0003
0.0004  0.0002
   LAYER  3                         0.0001  0.0002  0.0003  0.0001
0.0002  0.0001


 ------------------------------------------------------------------
---------------
                    MONTHLY SUMMARIES FOR DAILY HEADS (INCHES)
 ------------------------------------------------------------------
---------------


 AVERAGE DAILY HEAD ON              0.044   0.011   1.487   4.266
5.842   2.205
   TOP OF LAYER  2                  1.625   2.833   3.608   1.356
3.145   1.000

 STD. DEVIATION OF DAILY            0.018   0.004   3.164   2.226
2.527   0.859
   HEAD ON TOP OF LAYER  2          1.115   0.570   0.933   0.383
1.113   0.409


*****************************************************************
**************


*****************************************************************
**************

                           ANNUAL TOTALS FOR YEAR    6
 ------------------------------------------------------------------
---------------
                                          INCHES          CU.
FEET     PERCENT
                                         --------
----------    -------
   PRECIPITATION                          29.57
322017.375    100.00

   RUNOFF                                  0.000
0.000      0.00

   EVAPOTRANSPIRATION                     16.395
178537.484     55.44
```

```
   DRAINAGE COLLECTED FROM LAYER  1          14.2842
155555.125     48.31

   PERC./LEAKAGE THROUGH LAYER  3             0.002070
22.540      0.01

   AVG. HEAD ON TOP OF LAYER  2               2.2852

   CHANGE IN WATER STORAGE                   -1.111        -
12097.810     -3.76

   SOIL WATER AT START OF YEAR               12.640
137650.469

   SOIL WATER AT END OF YEAR                 11.314
123210.016

   SNOW WATER AT START OF YEAR                0.751
8173.420      2.54

   SNOW WATER AT END OF YEAR                  0.966
10516.065      3.27

   ANNUAL WATER BUDGET BALANCE                0.0000
0.032      0.00


*****************************************************************
**************


*****************************************************************
**************

                    MONTHLY TOTALS (IN INCHES) FOR YEAR    7
 ---------------------------------------------------------------
---------------

                                   JAN/JUL FEB/AUG MAR/SEP APR/OCT
MAY/NOV JUN/DEC
                                   ------- ------- ------- -------
------- -------

 PRECIPITATION                      0.70    0.54    1.87    2.47
4.50    6.03
                                    5.57    2.56    2.03    3.90
1.25    0.79
```

```
 RUNOFF                                0.000   0.000   0.000   0.000
0.000   0.000
                                       0.000   0.000   0.000   0.000
0.000   0.000

 EVAPOTRANSPIRATION                    0.388   0.353   0.513   0.490
3.668   4.371
                                       2.852   1.928   0.892   1.832
0.375   0.369

 LATERAL DRAINAGE COLLECTED            0.1269  0.0291  0.0084  0.8051
3.7345  1.5022
   FROM LAYER  1                       2.9112  1.5892  0.5342  1.9970
0.8128  0.2081

 PERCOLATION/LEAKAGE THROUGH           0.0000  0.0000  0.0000  0.0001
0.0005  0.0002
   LAYER  3                            0.0004  0.0002  0.0001  0.0003
0.0001  0.0000


 ------------------------------------------------------------------
---------------
                    MONTHLY SUMMARIES FOR DAILY HEADS (INCHES)
 ------------------------------------------------------------------
---------------


 AVERAGE DAILY HEAD ON                 0.241   0.061   0.016   1.576
7.027   2.947
   TOP OF LAYER  2                     5.502   3.017   1.048   3.791
1.594   0.395

 STD. DEVIATION OF DAILY               0.099   0.023   0.007   1.586
2.149   0.373
   HEAD ON TOP OF LAYER  2             2.321   0.892   0.247   1.730
0.633   0.162


*****************************************************************
**************


*****************************************************************
**************

                          ANNUAL TOTALS FOR YEAR     7
 ------------------------------------------------------------------
---------------
```

```
                                                INCHES          CU.
FEET     PERCENT
                                               --------
----------    -------
   PRECIPITATION                                32.21
350766.969    100.00

   RUNOFF                                        0.000
0.000      0.00

   EVAPOTRANSPIRATION                           18.030
196350.344     55.98

   DRAINAGE COLLECTED FROM LAYER  1             14.2588
155278.547     44.27

   PERC./LEAKAGE THROUGH LAYER  3                0.002054
22.364      0.01

   AVG. HEAD ON TOP OF LAYER  2                  2.2679

   CHANGE IN WATER STORAGE                      -0.081          -
884.357     -0.25

   SOIL WATER AT START OF YEAR                  11.314
123210.016

   SOIL WATER AT END OF YEAR                    11.864
129198.609

   SNOW WATER AT START OF YEAR                   0.966
10516.065      3.00

   SNOW WATER AT END OF YEAR                     0.335
3643.110      1.04

   ANNUAL WATER BUDGET BALANCE                   0.0000
0.079      0.00

*****************************************************************
**************

*****************************************************************
**************
```

MONTHLY TOTALS (IN INCHES) FOR YEAR 8

	JAN/JUL	FEB/AUG	MAR/SEP	APR/OCT	MAY/NOV	JUN/DEC
PRECIPITATION	0.84	0.33	2.47	1.25	2.67	4.55
	4.53	4.01	2.82	1.78	0.85	1.35
RUNOFF	0.000	0.000	0.000	0.000	0.000	0.000
	0.000	0.000	0.000	0.000	0.000	0.000
EVAPOTRANSPIRATION	0.632	0.674	0.462	0.049	2.915	3.832
	3.020	2.836	2.426	0.956	0.753	0.336
LATERAL DRAINAGE COLLECTED	0.0501	0.0117	0.0137	0.7036	2.4579	1.2395
FROM LAYER 1	0.6759	1.4940	0.8460	0.7978	0.5350	0.2620
PERCOLATION/LEAKAGE THROUGH	0.0000	0.0000	0.0000	0.0001	0.0003	0.0002
LAYER 3	0.0001	0.0002	0.0001	0.0001	0.0001	0.0000

MONTHLY SUMMARIES FOR DAILY HEADS (INCHES)

AVERAGE DAILY HEAD ON	0.095	0.024	0.026	1.380	4.654	2.432
TOP OF LAYER 2	1.283	2.836	1.660	1.515	1.050	0.497
STD. DEVIATION OF DAILY	0.039	0.009	0.090	0.679	2.194	0.318
HEAD ON TOP OF LAYER 2	0.540	0.536	0.384	0.287	0.247	0.204

```
*****************************************************************
**************

*****************************************************************
**************

                          ANNUAL TOTALS FOR YEAR     8
 ---------------------------------------------------------------
---------------
                                          INCHES          CU.
FEET      PERCENT
                                         --------
----------    -------
   PRECIPITATION                          27.45
298930.500    100.00

   RUNOFF                                  0.000
0.000       0.00

   EVAPOTRANSPIRATION                     18.891
205717.937     68.82

   DRAINAGE COLLECTED FROM LAYER  1        9.0873
98960.391     33.10

   PERC./LEAKAGE THROUGH LAYER  3          0.001372
14.941       0.00

   AVG. HEAD ON TOP OF LAYER  2            1.4543

   CHANGE IN WATER STORAGE                -0.529          -
5762.736     -1.93

   SOIL WATER AT START OF YEAR            11.864
129198.609

   SOIL WATER AT END OF YEAR              10.655
116033.484

   SNOW WATER AT START OF YEAR             0.335
3643.110       1.22

   SNOW WATER AT END OF YEAR               1.014
11045.497       3.70

   ANNUAL WATER BUDGET BALANCE             0.0000          -
0.016       0.00
```

****
****

****
****

MONTHLY TOTALS (IN INCHES) FOR YEAR 9

	JAN/JUL	FEB/AUG	MAR/SEP	APR/OCT	MAY/NOV	JUN/DEC
PRECIPITATION	2.37	0.35	2.02	2.08	3.03	3.57
	2.57	2.42	3.75	1.03	2.53	2.17
RUNOFF	0.000	0.000	0.000	0.000	0.000	0.000
	0.000	0.000	0.000	0.000	0.000	0.000
EVAPOTRANSPIRATION	0.413	0.392	0.426	0.655	2.742	2.347
	1.963	1.561	2.476	1.511	0.769	0.375
LATERAL DRAINAGE COLLECTED	0.0631	0.0145	0.0042	1.7561	2.7940	1.4406
FROM LAYER 1	1.4314	0.5564	0.4633	0.8857	0.8024	0.4560
PERCOLATION/LEAKAGE THROUGH	0.0000	0.0000	0.0000	0.0002	0.0004	0.0002
LAYER 3	0.0002	0.0001	0.0001	0.0001	0.0001	0.0001

MONTHLY SUMMARIES FOR DAILY HEADS (INCHES)

```
---------------

 AVERAGE DAILY HEAD ON              0.120   0.030   0.008   3.415
5.280   2.826
   TOP OF LAYER  2                  2.717   1.056   0.909   1.681
1.574   0.866

 STD. DEVIATION OF DAILY            0.049   0.011   0.003   2.078
2.178   1.255
   HEAD ON TOP OF LAYER  2          0.584   0.224   0.116   0.476
0.535   0.353

*****************************************************************
**************

*****************************************************************
**************

                          ANNUAL TOTALS FOR YEAR    9
 ---------------------------------------------------------------
---------------
                                          INCHES          CU.
FEET     PERCENT
                                         --------
----------    -------
   PRECIPITATION                          27.89
303722.156    100.00

   RUNOFF                                  0.000
0.000      0.00

   EVAPOTRANSPIRATION                     15.629
170194.656     56.04

   DRAINAGE COLLECTED FROM LAYER  1       10.6675
116169.203     38.25

   PERC./LEAKAGE THROUGH LAYER  3          0.001582
17.225      0.01

   AVG. HEAD ON TOP OF LAYER  2            1.7069

   CHANGE IN WATER STORAGE                 1.592
17341.070      5.71

   SOIL WATER AT START OF YEAR            10.655
116033.484
```

```
   SOIL WATER AT END OF YEAR                    11.211
122092.859

   SNOW WATER AT START OF YEAR                   1.014
11045.497      3.64

   SNOW WATER AT END OF YEAR                     2.050
22327.191      7.35

   ANNUAL WATER BUDGET BALANCE                   0.0000
0.000      0.00

*****************************************************************
**************

*****************************************************************
**************

                    MONTHLY TOTALS (IN INCHES) FOR YEAR   10
 ---------------------------------------------------------------
---------------

                                    JAN/JUL FEB/AUG MAR/SEP APR/OCT
MAY/NOV JUN/DEC
                                    ------- ------- ------- -------
------- -------

 PRECIPITATION                       1.23    0.49    2.43    2.43
1.99    2.97
                                     1.98    6.68    3.82    2.35
1.16    1.17

 RUNOFF                              0.000   0.000   0.000   0.000
0.000   0.000
                                     0.000   0.000   0.000   0.000
0.000   0.000

 EVAPOTRANSPIRATION                  0.354   0.465   0.588   0.753
1.992   2.191
                                     1.274   4.017   2.180   1.371
0.373   0.324

 LATERAL DRAINAGE COLLECTED          0.1099  0.0252  0.4911  2.0504
2.7854  1.4461
```

```
   FROM LAYER  1                    0.8479  1.3403  1.8770  2.0307
0.5760  0.1477

 PERCOLATION/LEAKAGE THROUGH        0.0000  0.0000  0.0001  0.0003
0.0004  0.0002
   LAYER  3                         0.0001  0.0002  0.0003  0.0003
0.0001  0.0000


 ------------------------------------------------------------------
---------------
                    MONTHLY SUMMARIES FOR DAILY HEADS (INCHES)
 ------------------------------------------------------------------
---------------


 AVERAGE DAILY HEAD ON              0.209   0.053   0.932   3.973
5.268   2.837
   TOP OF LAYER  2                  1.610   2.544   3.682   3.855
1.130   0.280

 STD. DEVIATION OF DAILY            0.086   0.020   0.987   2.525
2.135   0.605
   HEAD ON TOP OF LAYER  2          0.367   1.627   1.093   1.358
0.446   0.115


*****************************************************************
**************



*****************************************************************
**************

                           ANNUAL TOTALS FOR YEAR   10
 ------------------------------------------------------------------
---------------
                                          INCHES          CU.
FEET     PERCENT
                                         --------
----------    -------
   PRECIPITATION                           28.70
312543.062    100.00

   RUNOFF                                   0.000
0.000      0.00

   EVAPOTRANSPIRATION                      15.882
172957.297     55.34
```

```
   DRAINAGE COLLECTED FROM LAYER  1          13.7277
149495.172     47.83

   PERC./LEAKAGE THROUGH LAYER  3            0.002003
21.813      0.01

   AVG. HEAD ON TOP OF LAYER  2              2.1978

   CHANGE IN WATER STORAGE                  -0.912          -
9931.189     -3.18

   SOIL WATER AT START OF YEAR              11.211
122092.859

   SOIL WATER AT END OF YEAR                11.504
125277.328

   SNOW WATER AT START OF YEAR               2.050
22327.191      7.14

   SNOW WATER AT END OF YEAR                 0.846
9211.533      2.95

   ANNUAL WATER BUDGET BALANCE               0.0000           -
0.044      0.00


*****************************************************************
**************


*****************************************************************
**************

          AVERAGE MONTHLY VALUES IN INCHES FOR YEARS    1 THROUGH
10
 ---------------------------------------------------------------
---------------

                            JAN/JUL  FEB/AUG  MAR/SEP  APR/OCT
MAY/NOV  JUN/DEC
                            -------  -------  -------  -------
-------  -------
   PRECIPITATION
   -------------
     TOTALS                   1.09     0.72     1.81     2.15
3.52     4.53
```

```
                                3.72     3.43     3.13     1.54
1.61     1.47

     STD. DEVIATIONS            0.54     0.33     0.54     1.22
1.36     2.13
                                1.39     1.52     0.69     0.96
0.99     0.61

   RUNOFF
   ------
     TOTALS                     0.000    0.000    0.000    0.000
0.000    0.000
                                0.000    0.000    0.000    0.000
0.000    0.000

     STD. DEVIATIONS            0.000    0.000    0.000    0.000
0.000    0.000
                                0.000    0.000    0.000    0.000
0.000    0.000

   EVAPOTRANSPIRATION
   ------------------
     TOTALS                     0.416    0.485    0.516    0.442
2.818    3.181
                                2.460    2.212    2.118    1.020
0.712    0.386

     STD. DEVIATIONS            0.101    0.107    0.102    0.258
0.806    1.003
                                0.938    1.046    0.567    0.431
0.294    0.061

   LATERAL DRAINAGE COLLECTED FROM LAYER  1
   ----------------------------------------
     TOTALS                     0.0669   0.0154   0.2479   1.2488
3.1575   1.5889
                                1.6275   1.2944   1.0440   0.9100
0.5415   0.2361

     STD. DEVIATIONS            0.0499   0.0114   0.3573   0.9041
0.7573   0.5429
                                1.1817   0.4478   0.4726   0.6059
0.4488   0.1851

   PERCOLATION/LEAKAGE THROUGH LAYER  3
   -------------------------------------
     TOTALS                     0.0000   0.0000   0.0000   0.0002
0.0004   0.0002
                                0.0002   0.0002   0.0002   0.0001
0.0001   0.0000

     STD. DEVIATIONS            0.0000   0.0000   0.0001   0.0001
```

```
0.0001   0.0001
                                0.0002   0.0001   0.0001   0.0001
0.0001   0.0000


 ------------------------------------------------------------------
---------------
                AVERAGES OF MONTHLY AVERAGED DAILY HEADS (INCHES)
 ------------------------------------------------------------------
---------------


   DAILY AVERAGE HEAD ON TOP OF LAYER  2
   -------------------------------------
     AVERAGES                   0.1270   0.0322   0.4669   2.4250
5.9542   3.1117
                                3.0780   2.4572   2.0480   1.7275
1.0623   0.4482

     STD. DEVIATIONS            0.0947   0.0241   0.6722   1.7400
1.4049   1.0562
                                2.2178   0.8500   0.9271   1.1503
0.8804   0.3514

*****************************************************************
**************


*****************************************************************
**************

      AVERAGE ANNUAL TOTALS & (STD. DEVIATIONS) FOR YEARS    1
THROUGH   10
 ------------------------------------------------------------------
---------------
                                        INCHES            CU. FEET
PERCENT
                                  -------------------
-------------   ---------
  PRECIPITATION                   28.72    (   2.922)     312782.7
100.00

  RUNOFF                           0.000   (  0.0000)
0.00      0.000

  EVAPOTRANSPIRATION              16.766   (  1.9687)
182586.17     58.375

  LATERAL DRAINAGE COLLECTED      11.97891 (  2.73722)
```

```
130450.359   41.70639
    FROM LAYER  1

  PERCOLATION/LEAKAGE THROUGH     0.00175 (  0.00036)
19.011     0.00608
    LAYER  3

  AVERAGE HEAD ON TOP             1.912 (    0.434)
    OF LAYER  2

  CHANGE IN WATER STORAGE        -0.025   (  0.9559)       -
272.95     -0.087


*****************************************************************
**************
```

```
*****************************************************************
*************

                PEAK DAILY VALUES FOR YEARS    1 THROUGH   10
    ---------------------------------------------------------------
-----------
                                                  (INCHES)
(CU. FT.)
                                                 ----------
-------------
       PRECIPITATION                               3.44
37461.602

       RUNOFF                                      0.000
0.0000

       DRAINAGE COLLECTED FROM LAYER  1            0.21157
2304.01001

       PERCOLATION/LEAKAGE THROUGH LAYER  3        0.000027
0.29501

       AVERAGE HEAD ON TOP OF LAYER  2            12.000

       MAXIMUM HEAD ON TOP OF LAYER  2            14.925

       LOCATION OF MAXIMUM HEAD IN LAYER  1
             (DISTANCE FROM DRAIN)                40.0 FEET

       SNOW WATER                                  4.52
49189.9922


       MAXIMUM VEG. SOIL WATER (VOL/VOL)                    0.4170

       MINIMUM VEG. SOIL WATER (VOL/VOL)                    0.0180

        ***  Maximum heads are computed using McEnroe's
equations.  ***

            Reference:  Maximum Saturated Depth over Landfill
Liner
                        by Bruce M. McEnroe, University of
Kansas
                        ASCE Journal of Environmental
Engineering
                        Vol. 119, No. 2, March 1993, pp. 262-
270.
```

****
****

****
****

FINAL WATER STORAGE AT END OF YEAR 10

LAYER	(INCHES)	(VOL/VOL)
1	1.2559	0.1047
2	0.0000	0.0000
3	10.2480	0.4270
SNOW WATER	0.846	

****
****

****
****

```
******************************************************************
*************

******************************************************************
*************
 **
**
 **
**
 **              HYDROLOGIC EVALUATION OF LANDFILL PERFORMANCE
**
 **                HELP MODEL VERSION 3.07  (1 NOVEMBER 1997)
**
 **                  DEVELOPED BY ENVIRONMENTAL LABORATORY
**
 **                    USAE WATERWAYS EXPERIMENT STATION
**
 **             FOR USEPA RISK REDUCTION ENGINEERING LABORATORY
**
 **
**
 **
**

******************************************************************
*************

******************************************************************
*************


 PRECIPITATION DATA FILE:     c:\download\Phase7.D4
 TEMPERATURE DATA FILE:       c:\download\Phase7.D7
 SOLAR RADIATION DATA FILE:   c:\download\Phase7.D13
 EVAPOTRANSPIRATION DATA:     c:\download\Phase7.D11
 SOIL AND DESIGN DATA FILE:   c:\download\Phase7.D10
 OUTPUT DATA FILE:            c:\download\Phase7.OUT


 TIME:  10:27     DATE:   5/31/2013


******************************************************************
*************
```

TITLE: Regional Landfill Phase 7

****
****

NOTE: INITIAL MOISTURE CONTENT OF THE LAYERS AND SNOW WATER WERE
COMPUTED AS NEARLY STEADY-STATE VALUES BY THE PROGRAM.

LAYER 1

TYPE 2 - LATERAL DRAINAGE LAYER
MATERIAL TEXTURE NUMBER 1

THICKNESS	=	12.00	INCHES
POROSITY	=	0.4170	VOL/VOL
FIELD CAPACITY	=	0.0450	VOL/VOL
WILTING POINT	=	0.0180	VOL/VOL
INITIAL SOIL WATER CONTENT	=	0.1129	VOL/VOL
EFFECTIVE SAT. HYD. COND.	=	0.999999978000E-02	CM/SEC
SLOPE	=	3.00	PERCENT
DRAINAGE LENGTH	=	100.0	FEET

LAYER 2

TYPE 4 - FLEXIBLE MEMBRANE LINER
MATERIAL TEXTURE NUMBER 35

THICKNESS	=	0.06	INCHES
POROSITY	=	0.0000	VOL/VOL
FIELD CAPACITY	=	0.0000	VOL/VOL
WILTING POINT	=	0.0000	VOL/VOL
INITIAL SOIL WATER CONTENT	=	0.0000	VOL/VOL
EFFECTIVE SAT. HYD. COND.	=	0.199999996000E-12	CM/SEC
FML PINHOLE DENSITY	=	1.00	HOLES/ACRE
FML INSTALLATION DEFECTS	=	4.00	HOLES/ACRE
FML PLACEMENT QUALITY	=	3 - GOOD	

LAYER 3

TYPE 3 - BARRIER SOIL LINER
MATERIAL TEXTURE NUMBER 16

THICKNESS	=	24.00	INCHES
POROSITY	=	0.4270	VOL/VOL
FIELD CAPACITY	=	0.4180	VOL/VOL
WILTING POINT	=	0.3670	VOL/VOL
INITIAL SOIL WATER CONTENT	=	0.4270	VOL/VOL
EFFECTIVE SAT. HYD. COND.	=	0.100000001000E-06	CM/SEC

GENERAL DESIGN AND EVAPORATIVE ZONE DATA

NOTE: SCS RUNOFF CURVE NUMBER WAS COMPUTED FROM DEFAULT SOIL DATA BASE USING SOIL TEXTURE # 1 WITH BARE GROUND CONDITIONS, A SURFACE SLOPE OF 3.% AND A SLOPE LENGTH OF 100. FEET.

SCS RUNOFF CURVE NUMBER	=	74.90	
FRACTION OF AREA ALLOWING RUNOFF	=	0.0	PERCENT
AREA PROJECTED ON HORIZONTAL PLANE	=	3.000	ACRES
EVAPORATIVE ZONE DEPTH	=	8.0	INCHES
INITIAL WATER IN EVAPORATIVE ZONE	=	1.011	INCHES
UPPER LIMIT OF EVAPORATIVE STORAGE	=	3.336	INCHES
LOWER LIMIT OF EVAPORATIVE STORAGE	=	0.144	INCHES
INITIAL SNOW WATER	=	0.998	INCHES
INITIAL WATER IN LAYER MATERIALS	=	11.603	INCHES
TOTAL INITIAL WATER	=	12.600	INCHES
TOTAL SUBSURFACE INFLOW	=	0.00	INCHES/YEAR

EVAPOTRANSPIRATION AND WEATHER DATA

NOTE: EVAPOTRANSPIRATION DATA WAS OBTAINED FROM DULUTH MINNESOTA

STATION LATITUDE = 46.50 DEGREES

MAXIMUM LEAF AREA INDEX = 0.00
START OF GROWING SEASON (JULIAN DATE) = 144
END OF GROWING SEASON (JULIAN DATE) = 261
EVAPORATIVE ZONE DEPTH = 8.0
INCHES
AVERAGE ANNUAL WIND SPEED = 11.20 MPH
AVERAGE 1ST QUARTER RELATIVE HUMIDITY = 70.00 %
AVERAGE 2ND QUARTER RELATIVE HUMIDITY = 66.00 %
AVERAGE 3RD QUARTER RELATIVE HUMIDITY = 74.00 %
AVERAGE 4TH QUARTER RELATIVE HUMIDITY = 74.00 %

NOTE: PRECIPITATION DATA WAS SYNTHETICALLY GENERATED USING
COEFFICIENTS FOR DULUTH MINNESOTA

NORMAL MEAN MONTHLY PRECIPITATION (INCHES)

JAN/JUL	FEB/AUG	MAR/SEP	APR/OCT	MAY/NOV	JUN/DEC
1.20	0.90	1.78	2.16	3.15	3.96
3.96	4.12	3.26	2.21	1.69	1.29

NOTE: TEMPERATURE DATA WAS SYNTHETICALLY GENERATED USING
COEFFICIENTS FOR DULUTH MINNESOTA

NORMAL MEAN MONTHLY TEMPERATURE (DEGREES FAHRENHEIT)

JAN/JUL	FEB/AUG	MAR/SEP	APR/OCT	MAY/NOV	JUN/DEC
6.30	12.00	22.90	38.30	50.30	59.40
65.30	63.20	54.00	44.20	28.20	13.80

NOTE: SOLAR RADIATION DATA WAS SYNTHETICALLY GENERATED USING

COEFFICIENTS FOR DULUTH
MINNESOTA
AND STATION LATITUDE = 46.50 DEGREES

****
****

MONTHLY TOTALS (IN INCHES) FOR YEAR 1

	JAN/JUL	FEB/AUG	MAR/SEP	APR/OCT	MAY/NOV	JUN/DEC
PRECIPITATION	0.51	0.83	1.24	1.02	1.64	3.93
	3.41	3.48	2.98	0.90	2.99	0.77
RUNOFF	0.000	0.000	0.000	0.000	0.000	0.000
	0.000	0.000	0.000	0.000	0.000	0.000
EVAPOTRANSPIRATION	0.510	0.500	0.425	0.172	1.433	3.908
	1.970	3.326	1.915	0.522	1.098	0.478
LATERAL DRAINAGE COLLECTED	0.1244	0.0285	0.0083	0.1215	2.1559	1.0126
FROM LAYER 1	0.5694	0.9978	0.9912	0.6783	0.2807	0.4734
PERCOLATION/LEAKAGE THROUGH	0.0000	0.0000	0.0000	0.0000	0.0003	0.0002
LAYER 3	0.0001	0.0002	0.0002	0.0001	0.0000	0.0001

MONTHLY SUMMARIES FOR DAILY HEADS (INCHES)

```
 AVERAGE DAILY HEAD ON              0.236   0.060   0.016   0.238
4.089   1.986
   TOP OF LAYER  2                  1.081   1.894   1.944   1.288
0.551   0.899

 STD. DEVIATION OF DAILY            0.097   0.022   0.006   0.515
2.027   0.277
   HEAD ON TOP OF LAYER  2          0.210   0.352   0.704   0.494
0.090   0.278
```

****
****

****
****

ANNUAL TOTALS FOR YEAR 1

	INCHES	CU. FEET	PERCENT
PRECIPITATION	23.70	258093.031	100.00
RUNOFF	0.000	0.000	0.00
EVAPOTRANSPIRATION	16.255	177021.734	68.59
DRAINAGE COLLECTED FROM LAYER 1	7.4421	81044.078	31.40
PERC./LEAKAGE THROUGH LAYER 3	0.001140	12.414	0.00
AVG. HEAD ON TOP OF LAYER 2	1.1901		
CHANGE IN WATER STORAGE	0.001	14.758	0.01
SOIL WATER AT START OF YEAR	11.603	126355.211	

```
   SOIL WATER AT END OF YEAR                    11.604
126369.969

   SNOW WATER AT START OF YEAR                   0.998
10863.184      4.21

   SNOW WATER AT END OF YEAR                     0.998
10863.184      4.21

   ANNUAL WATER BUDGET BALANCE                   0.0000
0.038      0.00

*****************************************************************
**************

*****************************************************************
**************

                    MONTHLY TOTALS (IN INCHES) FOR YEAR    2
 ---------------------------------------------------------------
---------------

                                    JAN/JUL FEB/AUG MAR/SEP APR/OCT
MAY/NOV JUN/DEC
                                    ------- ------- ------- -------
------- -------

 PRECIPITATION                       0.65    0.95    1.83    5.02
4.48    5.12
                                     3.67    1.18    4.03    1.03
0.50    2.51

 RUNOFF                              0.000   0.000   0.000   0.000
0.000   0.000
                                     0.000   0.000   0.000   0.000
0.000   0.000

 EVAPOTRANSPIRATION                  0.386   0.428   0.462   0.617
2.424   2.915
                                     2.513   0.434   2.433   0.925
0.819   0.349

 LATERAL DRAINAGE COLLECTED          0.1254  0.0288  0.2432  2.8036
4.9017  2.7009
```

```
   FROM LAYER  1                    2.1982  0.7778  1.0092  0.7339
0.2323  0.0910

 PERCOLATION/LEAKAGE THROUGH        0.0000  0.0000  0.0000  0.0004
0.0007  0.0004
   LAYER  3                         0.0003  0.0001  0.0002  0.0001
0.0000  0.0000


 ------------------------------------------------------------------
---------------
                    MONTHLY SUMMARIES FOR DAILY HEADS (INCHES)
 ------------------------------------------------------------------
---------------


 AVERAGE DAILY HEAD ON              0.238   0.060   0.462   5.387
9.185   5.290
   TOP OF LAYER  2                  4.173   1.477   1.980   1.393
0.456   0.173

 STD. DEVIATION OF DAILY            0.098   0.023   0.795   3.783
1.542   1.896
   HEAD ON TOP OF LAYER  2          1.302   0.566   0.487   0.438
0.102   0.068


*****************************************************************
**************


*****************************************************************
**************

                          ANNUAL TOTALS FOR YEAR    2
 ------------------------------------------------------------------
---------------
                                          INCHES          CU.
FEET     PERCENT
                                         --------
----------    -------
   PRECIPITATION                           30.97
337263.344    100.00

   RUNOFF                                   0.000
0.000      0.00

   EVAPOTRANSPIRATION                      14.704
160123.234     47.48
```

DRAINAGE COLLECTED FROM LAYER 1 15.8461
172563.578 51.17

PERC./LEAKAGE THROUGH LAYER 3 0.002242
24.414 0.01

AVG. HEAD ON TOP OF LAYER 2 2.5227

CHANGE IN WATER STORAGE 0.418
4552.041 1.35

SOIL WATER AT START OF YEAR 11.604
126369.969

SOIL WATER AT END OF YEAR 11.237
122368.102

SNOW WATER AT START OF YEAR 0.998
10863.184 3.22

SNOW WATER AT END OF YEAR 1.783
19417.096 5.76

ANNUAL WATER BUDGET BALANCE 0.0000
0.056 0.00

****
****

****
****

MONTHLY TOTALS (IN INCHES) FOR YEAR 3

	JAN/JUL	FEB/AUG	MAR/SEP	APR/OCT	MAY/NOV	JUN/DEC
PRECIPITATION	1.30	0.56	0.82	0.74	6.23	9.47
	5.20	2.18	2.92	1.15	1.01	1.18

```
 RUNOFF                                0.000   0.000   0.000   0.000
0.000   0.000
                                       0.000   0.000   0.000   0.000
0.000   0.000

 EVAPOTRANSPIRATION                    0.485   0.571   0.670   0.413
4.132   4.418
                                       4.358   1.557   2.223   1.027
0.710   0.358

 LATERAL DRAINAGE COLLECTED            0.0222  0.0051  0.0015  0.1679
3.1779  2.3875
   FROM LAYER  1                       4.2326  1.4202  1.0511  0.4618
0.1684  0.0591

 PERCOLATION/LEAKAGE THROUGH           0.0000  0.0000  0.0000  0.0000
0.0004  0.0003
   LAYER  3                            0.0006  0.0002  0.0002  0.0001
0.0000  0.0000


 ------------------------------------------------------------------
---------------
                    MONTHLY SUMMARIES FOR DAILY HEADS (INCHES)
 ------------------------------------------------------------------
---------------


 AVERAGE DAILY HEAD ON                 0.042   0.011   0.003   0.329
6.023   4.641
   TOP OF LAYER  2                     7.943   2.696   2.062   0.877
0.330   0.112

 STD. DEVIATION OF DAILY               0.017   0.004   0.001   0.365
1.824   2.664
   HEAD ON TOP OF LAYER  2             2.303   0.678   0.629   0.159
0.105   0.046


*****************************************************************
**************


*****************************************************************
**************

                          ANNUAL TOTALS FOR YEAR     3
 ------------------------------------------------------------------
---------------
```

```
                                          INCHES          CU.
FEET     PERCENT
                                         --------
----------    -------
   PRECIPITATION                          32.76
356756.469    100.00

   RUNOFF                                  0.000
0.000      0.00

   EVAPOTRANSPIRATION                     20.921
227834.422     63.86

   DRAINAGE COLLECTED FROM LAYER  1       13.1553
143260.828     40.16

   PERC./LEAKAGE THROUGH LAYER  3          0.001867
20.334      0.01

   AVG. HEAD ON TOP OF LAYER  2            2.0892

   CHANGE IN WATER STORAGE                -1.319        -
14359.169     -4.02

   SOIL WATER AT START OF YEAR            11.237
122368.102

   SOIL WATER AT END OF YEAR              10.879
118473.906

   SNOW WATER AT START OF YEAR             1.783
19417.096      5.44

   SNOW WATER AT END OF YEAR               0.822
8952.120      2.51

   ANNUAL WATER BUDGET BALANCE             0.0000
0.046      0.00
```

****
****

****
****

MONTHLY TOTALS (IN INCHES) FOR YEAR 4

	JAN/JUL	FEB/AUG	MAR/SEP	APR/OCT	MAY/NOV	JUN/DEC
PRECIPITATION	1.30	0.82	1.74	1.50	3.81	3.92
	1.36	4.38	2.44	0.90	0.60	2.09
RUNOFF	0.000	0.000	0.000	0.000	0.000	0.000
	0.000	0.000	0.000	0.000	0.000	0.000
EVAPOTRANSPIRATION	0.286	0.605	0.395	0.101	2.888	3.071
	1.128	2.818	1.414	0.793	0.729	0.397
LATERAL DRAINAGE COLLECTED	0.0142	0.0033	0.0009	1.0145	3.2947	1.3630
FROM LAYER 1	0.8930	1.1450	0.9860	0.4714	0.1336	0.0406
PERCOLATION/LEAKAGE THROUGH	0.0000	0.0000	0.0000	0.0002	0.0005	0.0002
LAYER 3	0.0001	0.0002	0.0002	0.0001	0.0000	0.0000

MONTHLY SUMMARIES FOR DAILY HEADS (INCHES)

AVERAGE DAILY HEAD ON	0.027	0.007	0.002	1.990	6.203	2.674
TOP OF LAYER 2	1.695	2.174	1.934	0.895	0.262	0.077
STD. DEVIATION OF DAILY	0.011	0.003	0.001	1.133	2.795	0.761
HEAD ON TOP OF LAYER 2	0.671	1.014	0.433	0.351	0.079	0.032

```
*****************************************************************
**************

*****************************************************************
**************

                          ANNUAL TOTALS FOR YEAR    4
 ---------------------------------------------------------------
---------------
                                          INCHES          CU.
FEET     PERCENT
                                         --------
----------    -------
   PRECIPITATION                           24.86
270725.531    100.00

   RUNOFF                                   0.000
0.000      0.00

   EVAPOTRANSPIRATION                      14.624
159252.234     58.82

   DRAINAGE COLLECTED FROM LAYER  1         9.3603
101933.430     37.65

   PERC./LEAKAGE THROUGH LAYER  3           0.001380
15.024      0.01

   AVG. HEAD ON TOP OF LAYER  2             1.4949

   CHANGE IN WATER STORAGE                  0.875
9524.734      3.52

   SOIL WATER AT START OF YEAR             10.879
118473.906

   SOIL WATER AT END OF YEAR               10.783
117423.859

   SNOW WATER AT START OF YEAR              0.822
8952.120      3.31

   SNOW WATER AT END OF YEAR                1.793
19526.902      7.21

   ANNUAL WATER BUDGET BALANCE              0.0000
0.115      0.00
```

```
*****************************************************************
**************

*****************************************************************
**************

                    MONTHLY TOTALS (IN INCHES) FOR YEAR    5
 ---------------------------------------------------------------
---------------

                                    JAN/JUL FEB/AUG MAR/SEP APR/OCT
MAY/NOV JUN/DEC
                                    ------- ------- ------- -------
------- -------

 PRECIPITATION                       1.17    1.36    1.38    2.26
2.94    4.38
                                     4.36    4.15    2.62    0.85
2.04    1.60

 RUNOFF                              0.000   0.000   0.000   0.000
0.000   0.000
                                     0.000   0.000   0.000   0.000
0.000   0.000

 EVAPOTRANSPIRATION                  0.322   0.358   0.534   0.444
2.462   3.404
                                     2.733   2.140   2.491   0.767
0.309   0.369

 LATERAL DRAINAGE COLLECTED          0.0098  0.0022  0.9048  0.8658
3.1756  1.6724
   FROM LAYER  1                     1.6595  2.1303  0.8429  0.3292
0.2709  0.0965

 PERCOLATION/LEAKAGE THROUGH         0.0000  0.0000  0.0001  0.0001
0.0004  0.0002
   LAYER  3                          0.0002  0.0003  0.0001  0.0001
0.0000  0.0000


 ---------------------------------------------------------------
---------------
                    MONTHLY SUMMARIES FOR DAILY HEADS (INCHES)
 ---------------------------------------------------------------
```

AVERAGE DAILY HEAD ON	0.019	0.005	1.718	1.695	5.970	3.281
TOP OF LAYER 2	3.150	4.044	1.654	0.625	0.531	0.183
STD. DEVIATION OF DAILY	0.008	0.002	1.357	1.105	2.609	0.770
HEAD ON TOP OF LAYER 2	0.819	1.637	0.266	0.226	0.174	0.075

****

****

ANNUAL TOTALS FOR YEAR 5

	INCHES	CU. FEET	PERCENT
PRECIPITATION	29.11	317007.906	100.00
RUNOFF	0.000	0.000	0.00
EVAPOTRANSPIRATION	16.334	177872.562	56.11
DRAINAGE COLLECTED FROM LAYER 1	11.9599	130243.172	41.09
PERC./LEAKAGE THROUGH LAYER 3	0.001748	19.037	0.01
AVG. HEAD ON TOP OF LAYER 2	1.9062		
CHANGE IN WATER STORAGE	0.815	8873.126	2.80
SOIL WATER AT START OF YEAR	10.783	117423.859	

```
   SOIL WATER AT END OF YEAR                    12.640
137650.469

   SNOW WATER AT START OF YEAR                   1.793
19526.902       6.16

   SNOW WATER AT END OF YEAR                     0.751
8173.420       2.58

   ANNUAL WATER BUDGET BALANCE                   0.0000
0.007       0.00

*****************************************************************
**************
```

```
*****************************************************************
**************

                    MONTHLY TOTALS (IN INCHES) FOR YEAR    6
 ---------------------------------------------------------------
---------------

                                   JAN/JUL FEB/AUG MAR/SEP APR/OCT
MAY/NOV JUN/DEC
                                   ------- ------- ------- -------
------- -------

 PRECIPITATION                      0.80    1.02    2.30    2.75
3.91    1.39
                                    4.52    3.27    3.87    1.54
3.17    1.03

 RUNOFF                             0.000   0.000   0.000   0.000
0.000   0.000
                                    0.000   0.000   0.000   0.000
0.000   0.000

 EVAPOTRANSPIRATION                 0.383   0.500   0.682   0.729
3.526   1.350
                                    2.791   1.506   2.734   0.498
1.185   0.510

 LATERAL DRAINAGE COLLECTED         0.0232  0.0053  0.8027  2.1998
3.0977  1.1238
```

```
   FROM LAYER  1                    0.8560  1.4926  1.8392  0.7142
1.6033  0.5265

 PERCOLATION/LEAKAGE THROUGH        0.0000  0.0000  0.0001  0.0003
0.0004  0.0002
   LAYER  3                         0.0001  0.0002  0.0003  0.0001
0.0002  0.0001

 ------------------------------------------------------------------
---------------
                    MONTHLY SUMMARIES FOR DAILY HEADS (INCHES)
 ------------------------------------------------------------------
---------------


 AVERAGE DAILY HEAD ON              0.044   0.011   1.487   4.266
5.842   2.205
   TOP OF LAYER  2                  1.625   2.833   3.608   1.356
3.145   1.000

 STD. DEVIATION OF DAILY            0.018   0.004   3.164   2.226
2.527   0.859
   HEAD ON TOP OF LAYER  2          1.115   0.570   0.933   0.383
1.113   0.409

*****************************************************************
**************


*****************************************************************
**************

                           ANNUAL TOTALS FOR YEAR    6
 ------------------------------------------------------------------
---------------
                                          INCHES          CU.
FEET     PERCENT
                                         --------
----------    -------
   PRECIPITATION                           29.57
322017.375    100.00

   RUNOFF                                   0.000
0.000      0.00

   EVAPOTRANSPIRATION                      16.395
178537.484     55.44
```

DRAINAGE COLLECTED FROM LAYER 1 14.2842
155555.125 48.31

PERC./LEAKAGE THROUGH LAYER 3 0.002070
22.540 0.01

AVG. HEAD ON TOP OF LAYER 2 2.2852

CHANGE IN WATER STORAGE -1.111 -
12097.810 -3.76

SOIL WATER AT START OF YEAR 12.640
137650.469

SOIL WATER AT END OF YEAR 11.314
123210.016

SNOW WATER AT START OF YEAR 0.751
8173.420 2.54

SNOW WATER AT END OF YEAR 0.966
10516.065 3.27

ANNUAL WATER BUDGET BALANCE 0.0000
0.032 0.00

****
****

****
****

MONTHLY TOTALS (IN INCHES) FOR YEAR 7

	JAN/JUL	FEB/AUG	MAR/SEP	APR/OCT	MAY/NOV	JUN/DEC
PRECIPITATION	0.70	0.54	1.87	2.47	4.50	6.03
	5.57	2.56	2.03	3.90	1.25	0.79

```
 RUNOFF                                0.000   0.000   0.000   0.000
0.000   0.000
                                       0.000   0.000   0.000   0.000
0.000   0.000

 EVAPOTRANSPIRATION                    0.388   0.353   0.513   0.490
3.668   4.371
                                       2.852   1.928   0.892   1.832
0.375   0.369

 LATERAL DRAINAGE COLLECTED            0.1269  0.0291  0.0084  0.8051
3.7345  1.5022
   FROM LAYER  1                       2.9112  1.5892  0.5342  1.9970
0.8128  0.2081

 PERCOLATION/LEAKAGE THROUGH           0.0000  0.0000  0.0000  0.0001
0.0005  0.0002
   LAYER  3                            0.0004  0.0002  0.0001  0.0003
0.0001  0.0000


 ------------------------------------------------------------------
---------------
                    MONTHLY SUMMARIES FOR DAILY HEADS (INCHES)
 ------------------------------------------------------------------
---------------


 AVERAGE DAILY HEAD ON                 0.241   0.061   0.016   1.576
7.027   2.947
   TOP OF LAYER  2                     5.502   3.017   1.048   3.791
1.594   0.395

 STD. DEVIATION OF DAILY               0.099   0.023   0.007   1.586
2.149   0.373
   HEAD ON TOP OF LAYER  2             2.321   0.892   0.247   1.730
0.633   0.162


*****************************************************************
**************



*****************************************************************
**************

                          ANNUAL TOTALS FOR YEAR     7
 ------------------------------------------------------------------
---------------
```

```
                                                INCHES          CU.
FEET     PERCENT
                                               --------
----------    -------
   PRECIPITATION                                 32.21
350766.969    100.00

   RUNOFF                                         0.000
0.000      0.00

   EVAPOTRANSPIRATION                            18.030
196350.344     55.98

   DRAINAGE COLLECTED FROM LAYER  1              14.2588
155278.547     44.27

   PERC./LEAKAGE THROUGH LAYER  3                 0.002054
22.364      0.01

   AVG. HEAD ON TOP OF LAYER  2                   2.2679

   CHANGE IN WATER STORAGE                       -0.081          -
884.357     -0.25

   SOIL WATER AT START OF YEAR                   11.314
123210.016

   SOIL WATER AT END OF YEAR                     11.864
129198.609

   SNOW WATER AT START OF YEAR                    0.966
10516.065      3.00

   SNOW WATER AT END OF YEAR                      0.335
3643.110      1.04

   ANNUAL WATER BUDGET BALANCE                    0.0000
0.079      0.00


*****************************************************************
**************


*****************************************************************
**************
```

MONTHLY TOTALS (IN INCHES) FOR YEAR 8

	JAN/JUL	FEB/AUG	MAR/SEP	APR/OCT	MAY/NOV	JUN/DEC
PRECIPITATION	0.84	0.33	2.47	1.25	2.67	4.55
	4.53	4.01	2.82	1.78	0.85	1.35
RUNOFF	0.000	0.000	0.000	0.000	0.000	0.000
	0.000	0.000	0.000	0.000	0.000	0.000
EVAPOTRANSPIRATION	0.632	0.674	0.462	0.049	2.915	3.832
	3.020	2.836	2.426	0.956	0.753	0.336
LATERAL DRAINAGE COLLECTED	0.0501	0.0117	0.0137	0.7036	2.4579	1.2395
FROM LAYER 1	0.6759	1.4940	0.8460	0.7978	0.5350	0.2620
PERCOLATION/LEAKAGE THROUGH	0.0000	0.0000	0.0000	0.0001	0.0003	0.0002
LAYER 3	0.0001	0.0002	0.0001	0.0001	0.0001	0.0000

MONTHLY SUMMARIES FOR DAILY HEADS (INCHES)

AVERAGE DAILY HEAD ON	0.095	0.024	0.026	1.380	4.654	2.432
TOP OF LAYER 2	1.283	2.836	1.660	1.515	1.050	0.497
STD. DEVIATION OF DAILY	0.039	0.009	0.090	0.679	2.194	0.318
HEAD ON TOP OF LAYER 2	0.540	0.536	0.384	0.287	0.247	0.204

```
*****************************************************************
**************


*****************************************************************
**************

                          ANNUAL TOTALS FOR YEAR     8
 ---------------------------------------------------------------
---------------
                                          INCHES          CU.
FEET     PERCENT
                                         --------
----------    -------
   PRECIPITATION                          27.45
298930.500    100.00

   RUNOFF                                  0.000
0.000      0.00

   EVAPOTRANSPIRATION                     18.891
205717.937     68.82

   DRAINAGE COLLECTED FROM LAYER  1        9.0873
98960.391     33.10

   PERC./LEAKAGE THROUGH LAYER  3          0.001372
14.941      0.00

   AVG. HEAD ON TOP OF LAYER  2            1.4543

   CHANGE IN WATER STORAGE                -0.529          -
5762.736     -1.93

   SOIL WATER AT START OF YEAR            11.864
129198.609

   SOIL WATER AT END OF YEAR              10.655
116033.484

   SNOW WATER AT START OF YEAR             0.335
3643.110      1.22

   SNOW WATER AT END OF YEAR               1.014
11045.497      3.70

   ANNUAL WATER BUDGET BALANCE             0.0000          -
0.016      0.00
```

****
****

****
****

MONTHLY TOTALS (IN INCHES) FOR YEAR 9

	JAN/JUL	FEB/AUG	MAR/SEP	APR/OCT	MAY/NOV	JUN/DEC
PRECIPITATION	2.37	0.35	2.02	2.08	3.03	3.57
	2.57	2.42	3.75	1.03	2.53	2.17
RUNOFF	0.000	0.000	0.000	0.000	0.000	0.000
	0.000	0.000	0.000	0.000	0.000	0.000
EVAPOTRANSPIRATION	0.413	0.392	0.426	0.655	2.742	2.347
	1.963	1.561	2.476	1.511	0.769	0.375
LATERAL DRAINAGE COLLECTED	0.0631	0.0145	0.0042	1.7561	2.7940	1.4406
FROM LAYER 1	1.4314	0.5564	0.4633	0.8857	0.8024	0.4560
PERCOLATION/LEAKAGE THROUGH	0.0000	0.0000	0.0000	0.0002	0.0004	0.0002
LAYER 3	0.0002	0.0001	0.0001	0.0001	0.0001	0.0001

MONTHLY SUMMARIES FOR DAILY HEADS (INCHES)

```
---------------

 AVERAGE DAILY HEAD ON              0.120   0.030   0.008   3.415
5.280   2.826
   TOP OF LAYER  2                  2.717   1.056   0.909   1.681
1.574   0.866

 STD. DEVIATION OF DAILY            0.049   0.011   0.003   2.078
2.178   1.255
   HEAD ON TOP OF LAYER  2          0.584   0.224   0.116   0.476
0.535   0.353

*****************************************************************
**************


*****************************************************************
**************

                          ANNUAL TOTALS FOR YEAR    9
 ---------------------------------------------------------------
---------------
                                          INCHES          CU.
FEET     PERCENT
                                         --------
----------    -------
   PRECIPITATION                          27.89
303722.156    100.00

   RUNOFF                                  0.000
0.000      0.00

   EVAPOTRANSPIRATION                     15.629
170194.656     56.04

   DRAINAGE COLLECTED FROM LAYER  1       10.6675
116169.203     38.25

   PERC./LEAKAGE THROUGH LAYER  3          0.001582
17.225      0.01

   AVG. HEAD ON TOP OF LAYER  2            1.7069

   CHANGE IN WATER STORAGE                 1.592
17341.070      5.71

   SOIL WATER AT START OF YEAR            10.655
116033.484
```

```
   SOIL WATER AT END OF YEAR                    11.211
122092.859

   SNOW WATER AT START OF YEAR                   1.014
11045.497      3.64

   SNOW WATER AT END OF YEAR                     2.050
22327.191      7.35

   ANNUAL WATER BUDGET BALANCE                   0.0000
0.000      0.00

*****************************************************************
**************
```

```
*****************************************************************
**************

                    MONTHLY TOTALS (IN INCHES) FOR YEAR   10
 ---------------------------------------------------------------
---------------

                                    JAN/JUL FEB/AUG MAR/SEP APR/OCT
MAY/NOV JUN/DEC
                                    ------- ------- ------- -------
------- -------

 PRECIPITATION                       1.23    0.49    2.43    2.43
1.99    2.97
                                     1.98    6.68    3.82    2.35
1.16    1.17

 RUNOFF                              0.000   0.000   0.000   0.000
0.000   0.000
                                     0.000   0.000   0.000   0.000
0.000   0.000

 EVAPOTRANSPIRATION                  0.354   0.465   0.588   0.753
1.992   2.191
                                     1.274   4.017   2.180   1.371
0.373   0.324

 LATERAL DRAINAGE COLLECTED          0.1099  0.0252  0.4911  2.0504
2.7854  1.4461
```

```
   FROM LAYER  1                    0.8479  1.3403  1.8770  2.0307
0.5760  0.1477

 PERCOLATION/LEAKAGE THROUGH        0.0000  0.0000  0.0001  0.0003
0.0004  0.0002
   LAYER  3                         0.0001  0.0002  0.0003  0.0003
0.0001  0.0000


 ---------------------------------------------------------------
---------------
                    MONTHLY SUMMARIES FOR DAILY HEADS (INCHES)
 ---------------------------------------------------------------
---------------


 AVERAGE DAILY HEAD ON              0.209   0.053   0.932   3.973
5.268   2.837
   TOP OF LAYER  2                  1.610   2.544   3.682   3.855
1.130   0.280

 STD. DEVIATION OF DAILY            0.086   0.020   0.987   2.525
2.135   0.605
   HEAD ON TOP OF LAYER  2          0.367   1.627   1.093   1.358
0.446   0.115


*****************************************************************
**************



*****************************************************************
**************

                         ANNUAL TOTALS FOR YEAR   10
 ---------------------------------------------------------------
---------------
                                          INCHES          CU.
FEET     PERCENT
                                         --------
----------    -------
   PRECIPITATION                          28.70
312543.062    100.00

   RUNOFF                                  0.000
0.000      0.00

   EVAPOTRANSPIRATION                     15.882
172957.297     55.34
```

```
   DRAINAGE COLLECTED FROM LAYER  1        13.7277
149495.172     47.83

   PERC./LEAKAGE THROUGH LAYER  3           0.002003
21.813      0.01

   AVG. HEAD ON TOP OF LAYER  2             2.1978

   CHANGE IN WATER STORAGE                 -0.912         -
9931.189     -3.18

   SOIL WATER AT START OF YEAR             11.211
122092.859

   SOIL WATER AT END OF YEAR               11.504
125277.328

   SNOW WATER AT START OF YEAR              2.050
22327.191      7.14

   SNOW WATER AT END OF YEAR                0.846
9211.533      2.95

   ANNUAL WATER BUDGET BALANCE              0.0000          -
0.044      0.00


*****************************************************************
**************


*****************************************************************
**************

          AVERAGE MONTHLY VALUES IN INCHES FOR YEARS    1 THROUGH
10
 ---------------------------------------------------------------
---------------

                          JAN/JUL  FEB/AUG  MAR/SEP  APR/OCT
MAY/NOV  JUN/DEC
                          -------  -------  -------  -------
-------  -------
   PRECIPITATION
   -------------
     TOTALS                 1.09     0.72     1.81     2.15
3.52     4.53
```

```
                                3.72     3.43     3.13     1.54
1.61     1.47

     STD. DEVIATIONS            0.54     0.33     0.54     1.22
1.36     2.13
                                1.39     1.52     0.69     0.96
0.99     0.61

   RUNOFF
   ------
     TOTALS                     0.000    0.000    0.000    0.000
0.000    0.000
                                0.000    0.000    0.000    0.000
0.000    0.000

     STD. DEVIATIONS            0.000    0.000    0.000    0.000
0.000    0.000
                                0.000    0.000    0.000    0.000
0.000    0.000

   EVAPOTRANSPIRATION
   ------------------
     TOTALS                     0.416    0.485    0.516    0.442
2.818    3.181
                                2.460    2.212    2.118    1.020
0.712    0.386

     STD. DEVIATIONS            0.101    0.107    0.102    0.258
0.806    1.003
                                0.938    1.046    0.567    0.431
0.294    0.061

   LATERAL DRAINAGE COLLECTED FROM LAYER  1
   ----------------------------------------
     TOTALS                     0.0669   0.0154   0.2479   1.2488
3.1575   1.5889
                                1.6275   1.2944   1.0440   0.9100
0.5415   0.2361

     STD. DEVIATIONS            0.0499   0.0114   0.3573   0.9041
0.7573   0.5429
                                1.1817   0.4478   0.4726   0.6059
0.4488   0.1851

   PERCOLATION/LEAKAGE THROUGH LAYER  3
   -------------------------------------
     TOTALS                     0.0000   0.0000   0.0000   0.0002
0.0004   0.0002
                                0.0002   0.0002   0.0002   0.0001
0.0001   0.0000

     STD. DEVIATIONS            0.0000   0.0000   0.0001   0.0001
```

```
0.0001   0.0001
                                0.0002   0.0001   0.0001   0.0001
0.0001   0.0000


 ------------------------------------------------------------------
---------------
                AVERAGES OF MONTHLY AVERAGED DAILY HEADS (INCHES)
 ------------------------------------------------------------------
---------------


   DAILY AVERAGE HEAD ON TOP OF LAYER  2
   -------------------------------------
     AVERAGES                   0.1270   0.0322   0.4669   2.4250
5.9542   3.1117
                                3.0780   2.4572   2.0480   1.7275
1.0623   0.4482

     STD. DEVIATIONS            0.0947   0.0241   0.6722   1.7400
1.4049   1.0562
                                2.2178   0.8500   0.9271   1.1503
0.8804   0.3514


*****************************************************************
**************


*****************************************************************
**************

      AVERAGE ANNUAL TOTALS & (STD. DEVIATIONS) FOR YEARS    1
THROUGH   10
 ------------------------------------------------------------------
---------------
                                          INCHES            CU. FEET
PERCENT
                                     -------------------
-------------   ---------
  PRECIPITATION                     28.72    (   2.922)     312782.7
100.00

  RUNOFF                             0.000   (  0.0000)
0.00      0.000

  EVAPOTRANSPIRATION                16.766   (  1.9687)
182586.17     58.375

  LATERAL DRAINAGE COLLECTED        11.97891 (  2.73722)
```

```
130450.359   41.70639
    FROM LAYER  1

  PERCOLATION/LEAKAGE THROUGH     0.00175 (  0.00036)
19.011     0.00608
    LAYER  3

  AVERAGE HEAD ON TOP             1.912 (    0.434)
    OF LAYER  2

  CHANGE IN WATER STORAGE        -0.025   (  0.9559)       -
272.95     -0.087


*****************************************************************
**************
```

```
*****************************************************************
*************

                 PEAK DAILY VALUES FOR YEARS    1 THROUGH   10
    ---------------------------------------------------------------
-----------
                                                  (INCHES)
(CU. FT.)
                                                 ----------
-------------
       PRECIPITATION                               3.44
37461.602

       RUNOFF                                      0.000
0.0000

       DRAINAGE COLLECTED FROM LAYER  1            0.21157
2304.01001

       PERCOLATION/LEAKAGE THROUGH LAYER  3        0.000027
0.29501

       AVERAGE HEAD ON TOP OF LAYER  2            12.000

       MAXIMUM HEAD ON TOP OF LAYER  2            14.925

       LOCATION OF MAXIMUM HEAD IN LAYER  1
             (DISTANCE FROM DRAIN)                40.0 FEET

       SNOW WATER                                  4.52
49189.9922


       MAXIMUM VEG. SOIL WATER (VOL/VOL)                    0.4170

       MINIMUM VEG. SOIL WATER (VOL/VOL)                    0.0180

        ***  Maximum heads are computed using McEnroe's
equations.  ***

            Reference:  Maximum Saturated Depth over Landfill
Liner
                        by Bruce M. McEnroe, University of
Kansas
                        ASCE Journal of Environmental
Engineering
                        Vol. 119, No. 2, March 1993, pp. 262-
270.
```

****
****

****
****

FINAL WATER STORAGE AT END OF YEAR 10

LAYER	(INCHES)	(VOL/VOL)
1	1.2559	0.1047
2	0.0000	0.0000
3	10.2480	0.4270
SNOW WATER	0.846	

****
****

****
****

```
******************************************************************
*************

******************************************************************
*************
 **
**
 **
**
 **              HYDROLOGIC EVALUATION OF LANDFILL PERFORMANCE
**
 **                HELP MODEL VERSION 3.07  (1 NOVEMBER 1997)
**
 **                  DEVELOPED BY ENVIRONMENTAL LABORATORY
**
 **                    USAE WATERWAYS EXPERIMENT STATION
**
 **             FOR USEPA RISK REDUCTION ENGINEERING LABORATORY
**
 **
**
 **
**

******************************************************************
*************

******************************************************************
*************


 PRECIPITATION DATA FILE:     c:\download\Phase8.D4
 TEMPERATURE DATA FILE:       c:\download\Phase8.D7
 SOLAR RADIATION DATA FILE:   c:\download\Phase8.D13
 EVAPOTRANSPIRATION DATA:     c:\download\Phase8.D11
 SOIL AND DESIGN DATA FILE:   c:\download\Phase8.D10
 OUTPUT DATA FILE:            c:\download\Phase8.OUT


 TIME:  10:33     DATE:   5/31/2013


******************************************************************
*************
```

TITLE: Regional Landfill Phase 8

****
****

NOTE: INITIAL MOISTURE CONTENT OF THE LAYERS AND SNOW WATER WERE
COMPUTED AS NEARLY STEADY-STATE VALUES BY THE PROGRAM.

LAYER 1

TYPE 2 - LATERAL DRAINAGE LAYER
MATERIAL TEXTURE NUMBER 1

THICKNESS	=	12.00	INCHES
POROSITY	=	0.4170	VOL/VOL
FIELD CAPACITY	=	0.0450	VOL/VOL
WILTING POINT	=	0.0180	VOL/VOL
INITIAL SOIL WATER CONTENT	=	0.1129	VOL/VOL
EFFECTIVE SAT. HYD. COND.	=	0.999999978000E-02	CM/SEC
SLOPE	=	3.00	PERCENT
DRAINAGE LENGTH	=	100.0	FEET

LAYER 2

TYPE 4 - FLEXIBLE MEMBRANE LINER
MATERIAL TEXTURE NUMBER 35

THICKNESS	=	0.06	INCHES
POROSITY	=	0.0000	VOL/VOL
FIELD CAPACITY	=	0.0000	VOL/VOL
WILTING POINT	=	0.0000	VOL/VOL
INITIAL SOIL WATER CONTENT	=	0.0000	VOL/VOL
EFFECTIVE SAT. HYD. COND.	=	0.199999996000E-12	CM/SEC
FML PINHOLE DENSITY	=	1.00	HOLES/ACRE
FML INSTALLATION DEFECTS	=	4.00	HOLES/ACRE
FML PLACEMENT QUALITY	=	3 - GOOD	

LAYER 3

TYPE 3 - BARRIER SOIL LINER
MATERIAL TEXTURE NUMBER 16

THICKNESS	=	24.00	INCHES
POROSITY	=	0.4270	VOL/VOL
FIELD CAPACITY	=	0.4180	VOL/VOL
WILTING POINT	=	0.3670	VOL/VOL
INITIAL SOIL WATER CONTENT	=	0.4270	VOL/VOL
EFFECTIVE SAT. HYD. COND.	=	0.100000001000E-06	CM/SEC

GENERAL DESIGN AND EVAPORATIVE ZONE DATA

NOTE: SCS RUNOFF CURVE NUMBER WAS COMPUTED FROM DEFAULT SOIL DATA BASE USING SOIL TEXTURE # 1 WITH BARE GROUND CONDITIONS, A SURFACE SLOPE OF 3.% AND A SLOPE LENGTH OF 100. FEET.

SCS RUNOFF CURVE NUMBER	=	74.90	
FRACTION OF AREA ALLOWING RUNOFF	=	0.0	PERCENT
AREA PROJECTED ON HORIZONTAL PLANE	=	3.300	ACRES
EVAPORATIVE ZONE DEPTH	=	8.0	INCHES
INITIAL WATER IN EVAPORATIVE ZONE	=	1.011	INCHES
UPPER LIMIT OF EVAPORATIVE STORAGE	=	3.336	INCHES
LOWER LIMIT OF EVAPORATIVE STORAGE	=	0.144	INCHES
INITIAL SNOW WATER	=	0.998	INCHES
INITIAL WATER IN LAYER MATERIALS	=	11.603	INCHES
TOTAL INITIAL WATER	=	12.600	INCHES
TOTAL SUBSURFACE INFLOW	=	0.00	INCHES/YEAR

EVAPOTRANSPIRATION AND WEATHER DATA

NOTE: EVAPOTRANSPIRATION DATA WAS OBTAINED FROM DULUTH MINNESOTA

STATION LATITUDE = 46.50 DEGREES

MAXIMUM LEAF AREA INDEX	=	0.00
START OF GROWING SEASON (JULIAN DATE)	=	144
END OF GROWING SEASON (JULIAN DATE)	=	261
EVAPORATIVE ZONE DEPTH	=	8.0 INCHES
AVERAGE ANNUAL WIND SPEED	=	11.20 MPH
AVERAGE 1ST QUARTER RELATIVE HUMIDITY	=	70.00 %
AVERAGE 2ND QUARTER RELATIVE HUMIDITY	=	66.00 %
AVERAGE 3RD QUARTER RELATIVE HUMIDITY	=	74.00 %
AVERAGE 4TH QUARTER RELATIVE HUMIDITY	=	74.00 %

NOTE: PRECIPITATION DATA WAS SYNTHETICALLY GENERATED USING
COEFFICIENTS FOR DULUTH MINNESOTA

NORMAL MEAN MONTHLY PRECIPITATION (INCHES)

JAN/JUL	FEB/AUG	MAR/SEP	APR/OCT	MAY/NOV	JUN/DEC
1.20	0.90	1.78	2.16	3.15	3.96
3.96	4.12	3.26	2.21	1.69	1.29

NOTE: TEMPERATURE DATA WAS SYNTHETICALLY GENERATED USING
COEFFICIENTS FOR DULUTH MINNESOTA

NORMAL MEAN MONTHLY TEMPERATURE (DEGREES FAHRENHEIT)

JAN/JUL	FEB/AUG	MAR/SEP	APR/OCT	MAY/NOV	JUN/DEC
6.30	12.00	22.90	38.30	50.30	59.40
65.30	63.20	54.00	44.20	28.20	13.80

NOTE: SOLAR RADIATION DATA WAS SYNTHETICALLY GENERATED USING

COEFFICIENTS FOR DULUTH
MINNESOTA
AND STATION LATITUDE = 46.50 DEGREES

****
****

MONTHLY TOTALS (IN INCHES) FOR YEAR 1

	JAN/JUL	FEB/AUG	MAR/SEP	APR/OCT	MAY/NOV	JUN/DEC
PRECIPITATION	0.51	0.83	1.24	1.02	1.64	3.93
	3.41	3.48	2.98	0.90	2.99	0.77
RUNOFF	0.000	0.000	0.000	0.000	0.000	0.000
	0.000	0.000	0.000	0.000	0.000	0.000
EVAPOTRANSPIRATION	0.510	0.500	0.425	0.172	1.433	3.908
	1.970	3.326	1.915	0.522	1.098	0.478
LATERAL DRAINAGE COLLECTED	0.1244	0.0285	0.0083	0.1215	2.1559	1.0126
FROM LAYER 1	0.5694	0.9978	0.9912	0.6783	0.2807	0.4734
PERCOLATION/LEAKAGE THROUGH	0.0000	0.0000	0.0000	0.0000	0.0003	0.0002
LAYER 3	0.0001	0.0002	0.0002	0.0001	0.0000	0.0001

MONTHLY SUMMARIES FOR DAILY HEADS (INCHES)

```
---------------

 AVERAGE DAILY HEAD ON              0.236   0.060   0.016   0.238
4.089   1.986
   TOP OF LAYER  2                  1.081   1.894   1.944   1.288
0.551   0.899

 STD. DEVIATION OF DAILY            0.097   0.022   0.006   0.515
2.027   0.277
   HEAD ON TOP OF LAYER  2          0.210   0.352   0.704   0.494
0.090   0.278

*****************************************************************
**************



*****************************************************************
**************

                           ANNUAL TOTALS FOR YEAR    1
 ---------------------------------------------------------------
---------------
                                          INCHES          CU.
FEET     PERCENT
                                         --------
----------    -------
   PRECIPITATION                          23.70
283902.312    100.00

   RUNOFF                                  0.000
0.000      0.00

   EVAPOTRANSPIRATION                     16.255
194723.906     68.59

   DRAINAGE COLLECTED FROM LAYER  1        7.4421
89148.484     31.40

   PERC./LEAKAGE THROUGH LAYER  3          0.001140
13.655      0.00

   AVG. HEAD ON TOP OF LAYER  2            1.1901

   CHANGE IN WATER STORAGE                 0.001
16.234      0.01

   SOIL WATER AT START OF YEAR            11.603
138990.734
```

SOIL WATER AT END OF YEAR 11.604
139006.969

SNOW WATER AT START OF YEAR 0.998
11949.502 4.21

SNOW WATER AT END OF YEAR 0.998
11949.502 4.21

ANNUAL WATER BUDGET BALANCE 0.0000
0.042 0.00

****
****

****
****

MONTHLY TOTALS (IN INCHES) FOR YEAR 2

	JAN/JUL	FEB/AUG	MAR/SEP	APR/OCT	MAY/NOV	JUN/DEC
PRECIPITATION	0.65	0.95	1.83	5.02	4.48	5.12
	3.67	1.18	4.03	1.03	0.50	2.51
RUNOFF	0.000	0.000	0.000	0.000	0.000	0.000
	0.000	0.000	0.000	0.000	0.000	0.000
EVAPOTRANSPIRATION	0.386	0.428	0.462	0.617	2.424	2.915
	2.513	0.434	2.433	0.925	0.819	0.349
LATERAL DRAINAGE COLLECTED	0.1254	0.0288	0.2432	2.8036	4.9017	2.7009

```
   FROM LAYER  1                    2.1982  0.7778  1.0092  0.7339
0.2323  0.0910

 PERCOLATION/LEAKAGE THROUGH        0.0000  0.0000  0.0000  0.0004
0.0007  0.0004
   LAYER  3                         0.0003  0.0001  0.0002  0.0001
0.0000  0.0000


 ---------------------------------------------------------------
---------------
                    MONTHLY SUMMARIES FOR DAILY HEADS (INCHES)
 ---------------------------------------------------------------
---------------


 AVERAGE DAILY HEAD ON              0.238   0.060   0.462   5.387
9.185   5.290
   TOP OF LAYER  2                  4.173   1.477   1.980   1.393
0.456   0.173

 STD. DEVIATION OF DAILY            0.098   0.023   0.795   3.783
1.542   1.896
   HEAD ON TOP OF LAYER  2          1.302   0.566   0.487   0.438
0.102   0.068


*****************************************************************
**************



*****************************************************************
**************

                           ANNUAL TOTALS FOR YEAR    2
 ---------------------------------------------------------------
---------------
                                          INCHES          CU.
FEET     PERCENT
                                         --------
----------    -------
   PRECIPITATION                          30.97
370989.656    100.00

   RUNOFF                                  0.000
0.000      0.00

   EVAPOTRANSPIRATION                     14.704
176135.562     47.48
```

```
   DRAINAGE COLLECTED FROM LAYER  1          15.8461
189819.937      51.17

   PERC./LEAKAGE THROUGH LAYER  3             0.002242
26.855       0.01

   AVG. HEAD ON TOP OF LAYER  2               2.5227

   CHANGE IN WATER STORAGE                    0.418
5007.245       1.35

   SOIL WATER AT START OF YEAR               11.604
139006.969

   SOIL WATER AT END OF YEAR                 11.237
134604.906

   SNOW WATER AT START OF YEAR                0.998
11949.502       3.22

   SNOW WATER AT END OF YEAR                  1.783
21358.805       5.76

   ANNUAL WATER BUDGET BALANCE                0.0000
0.062       0.00

*****************************************************************
**************

*****************************************************************
**************

                    MONTHLY TOTALS (IN INCHES) FOR YEAR    3
 ---------------------------------------------------------------
---------------

                                    JAN/JUL FEB/AUG MAR/SEP APR/OCT
MAY/NOV JUN/DEC
                                    ------- ------- ------- -------
------- -------

 PRECIPITATION                       1.30    0.56    0.82    0.74
6.23    9.47
                                     5.20    2.18    2.92    1.15
1.01    1.18
```

```
 RUNOFF                              0.000   0.000   0.000   0.000
0.000   0.000
                                     0.000   0.000   0.000   0.000
0.000   0.000

 EVAPOTRANSPIRATION                  0.485   0.571   0.670   0.413
4.132   4.418
                                     4.358   1.557   2.223   1.027
0.710   0.358

 LATERAL DRAINAGE COLLECTED          0.0222  0.0051  0.0015  0.1679
3.1779  2.3875
   FROM LAYER  1                     4.2326  1.4202  1.0511  0.4618
0.1684  0.0591

 PERCOLATION/LEAKAGE THROUGH         0.0000  0.0000  0.0000  0.0000
0.0004  0.0003
   LAYER  3                          0.0006  0.0002  0.0002  0.0001
0.0000  0.0000


 ------------------------------------------------------------------
---------------
                    MONTHLY SUMMARIES FOR DAILY HEADS (INCHES)
 ------------------------------------------------------------------
---------------


 AVERAGE DAILY HEAD ON               0.042   0.011   0.003   0.329
6.023   4.641
   TOP OF LAYER  2                   7.943   2.696   2.062   0.877
0.330   0.112

 STD. DEVIATION OF DAILY             0.017   0.004   0.001   0.365
1.824   2.664
   HEAD ON TOP OF LAYER  2           2.303   0.678   0.629   0.159
0.105   0.046


*****************************************************************
**************


*****************************************************************
**************

                          ANNUAL TOTALS FOR YEAR     3
 ------------------------------------------------------------------
---------------
```

```
                                          INCHES          CU.
FEET     PERCENT
                                         --------
----------    -------
   PRECIPITATION                          32.76
392432.094    100.00

   RUNOFF                                  0.000
0.000      0.00

   EVAPOTRANSPIRATION                     20.921
250617.859     63.86

   DRAINAGE COLLECTED FROM LAYER  1       13.1553
157586.922     40.16

   PERC./LEAKAGE THROUGH LAYER  3          0.001867
22.367      0.01

   AVG. HEAD ON TOP OF LAYER  2            2.0892

   CHANGE IN WATER STORAGE                -1.319        -
15795.086     -4.02

   SOIL WATER AT START OF YEAR            11.237
134604.906

   SOIL WATER AT END OF YEAR              10.879
130321.297

   SNOW WATER AT START OF YEAR             1.783
21358.805      5.44

   SNOW WATER AT END OF YEAR               0.822
9847.332      2.51

   ANNUAL WATER BUDGET BALANCE             0.0000
0.051      0.00


*****************************************************************
**************


*****************************************************************
**************
```

MONTHLY TOTALS (IN INCHES) FOR YEAR 4

	JAN/JUL	FEB/AUG	MAR/SEP	APR/OCT	MAY/NOV	JUN/DEC
PRECIPITATION	1.30	0.82	1.74	1.50	3.81	3.92
	1.36	4.38	2.44	0.90	0.60	2.09
RUNOFF	0.000	0.000	0.000	0.000	0.000	0.000
	0.000	0.000	0.000	0.000	0.000	0.000
EVAPOTRANSPIRATION	0.286	0.605	0.395	0.101	2.888	3.071
	1.128	2.818	1.414	0.793	0.729	0.397
LATERAL DRAINAGE COLLECTED	0.0142	0.0033	0.0009	1.0145	3.2947	1.3630
FROM LAYER 1	0.8930	1.1450	0.9860	0.4714	0.1336	0.0406
PERCOLATION/LEAKAGE THROUGH	0.0000	0.0000	0.0000	0.0002	0.0005	0.0002
LAYER 3	0.0001	0.0002	0.0002	0.0001	0.0000	0.0000

MONTHLY SUMMARIES FOR DAILY HEADS (INCHES)

AVERAGE DAILY HEAD ON	0.027	0.007	0.002	1.990	6.203	2.674
TOP OF LAYER 2	1.695	2.174	1.934	0.895	0.262	0.077
STD. DEVIATION OF DAILY	0.011	0.003	0.001	1.133	2.795	0.761
HEAD ON TOP OF LAYER 2	0.671	1.014	0.433	0.351	0.079	0.032

****
****

****
****

ANNUAL TOTALS FOR YEAR 4

	INCHES	CU. FEET	PERCENT
PRECIPITATION	24.86	297798.094	100.00
RUNOFF	0.000	0.000	0.00
EVAPOTRANSPIRATION	14.624	175177.453	58.82
DRAINAGE COLLECTED FROM LAYER 1	9.3603	112126.773	37.65
PERC./LEAKAGE THROUGH LAYER 3	0.001380	16.526	0.01
AVG. HEAD ON TOP OF LAYER 2	1.4949		
CHANGE IN WATER STORAGE	0.875	10477.207	3.52
SOIL WATER AT START OF YEAR	10.879	130321.297	
SOIL WATER AT END OF YEAR	10.783	129166.242	
SNOW WATER AT START OF YEAR	0.822	9847.332	3.31
SNOW WATER AT END OF YEAR	1.793	21479.592	7.21
ANNUAL WATER BUDGET BALANCE	0.0000	0.126	0.00

```
*****************************************************************
**************

*****************************************************************
**************

                    MONTHLY TOTALS (IN INCHES) FOR YEAR    5
 ---------------------------------------------------------------
---------------

                                      JAN/JUL FEB/AUG MAR/SEP APR/OCT
MAY/NOV JUN/DEC
                                      ------- ------- ------- -------
------- -------

 PRECIPITATION                         1.17    1.36    1.38    2.26
2.94    4.38
                                       4.36    4.15    2.62    0.85
2.04    1.60

 RUNOFF                                0.000   0.000   0.000   0.000
0.000   0.000
                                       0.000   0.000   0.000   0.000
0.000   0.000

 EVAPOTRANSPIRATION                    0.322   0.358   0.534   0.444
2.462   3.404
                                       2.733   2.140   2.491   0.767
0.309   0.369

 LATERAL DRAINAGE COLLECTED            0.0098  0.0022  0.9048  0.8658
3.1756  1.6724
   FROM LAYER  1                       1.6595  2.1303  0.8429  0.3292
0.2709  0.0965

 PERCOLATION/LEAKAGE THROUGH           0.0000  0.0000  0.0001  0.0001
0.0004  0.0002
   LAYER  3                            0.0002  0.0003  0.0001  0.0001
0.0000  0.0000


 ---------------------------------------------------------------
---------------
                    MONTHLY SUMMARIES FOR DAILY HEADS (INCHES)
 ---------------------------------------------------------------
```

```
---------------

 AVERAGE DAILY HEAD ON              0.019   0.005   1.718   1.695
5.970   3.281
   TOP OF LAYER  2                  3.150   4.044   1.654   0.625
0.531   0.183

 STD. DEVIATION OF DAILY            0.008   0.002   1.357   1.105
2.609   0.770
   HEAD ON TOP OF LAYER  2          0.819   1.637   0.266   0.226
0.174   0.075

*****************************************************************
**************



*****************************************************************
**************

                          ANNUAL TOTALS FOR YEAR    5
 ---------------------------------------------------------------
---------------
                                          INCHES          CU.
FEET     PERCENT
                                         --------
----------    -------
   PRECIPITATION                          29.11
348708.687    100.00

   RUNOFF                                  0.000
0.000      0.00

   EVAPOTRANSPIRATION                     16.334
195659.812     56.11

   DRAINAGE COLLECTED FROM LAYER  1       11.9599
143267.484     41.09

   PERC./LEAKAGE THROUGH LAYER  3          0.001748
20.940      0.01

   AVG. HEAD ON TOP OF LAYER  2            1.9062

   CHANGE IN WATER STORAGE                 0.815
9760.438      2.80

   SOIL WATER AT START OF YEAR            10.783
129166.242
```

```
   SOIL WATER AT END OF YEAR                    12.640
151415.516

   SNOW WATER AT START OF YEAR                   1.793
21479.592      6.16

   SNOW WATER AT END OF YEAR                     0.751
8990.763      2.58

   ANNUAL WATER BUDGET BALANCE                   0.0000
0.008      0.00

*****************************************************************
**************
```

```
*****************************************************************
**************

                    MONTHLY TOTALS (IN INCHES) FOR YEAR    6
 ---------------------------------------------------------------
---------------

                                   JAN/JUL FEB/AUG MAR/SEP APR/OCT
MAY/NOV JUN/DEC
                                   ------- ------- ------- -------
------- -------

 PRECIPITATION                      0.80    1.02    2.30    2.75
3.91    1.39
                                    4.52    3.27    3.87    1.54
3.17    1.03

 RUNOFF                             0.000   0.000   0.000   0.000
0.000   0.000
                                    0.000   0.000   0.000   0.000
0.000   0.000

 EVAPOTRANSPIRATION                 0.383   0.500   0.682   0.729
3.526   1.350
                                    2.791   1.506   2.734   0.498
1.185   0.510

 LATERAL DRAINAGE COLLECTED         0.0232  0.0053  0.8027  2.1998
3.0977  1.1238
```

```
   FROM LAYER  1                    0.8560  1.4926  1.8392  0.7142
1.6033  0.5265

 PERCOLATION/LEAKAGE THROUGH        0.0000  0.0000  0.0001  0.0003
0.0004  0.0002
   LAYER  3                         0.0001  0.0002  0.0003  0.0001
0.0002  0.0001


 ------------------------------------------------------------------
---------------
                    MONTHLY SUMMARIES FOR DAILY HEADS (INCHES)
 ------------------------------------------------------------------
---------------


 AVERAGE DAILY HEAD ON              0.044   0.011   1.487   4.266
5.842   2.205
   TOP OF LAYER  2                  1.625   2.833   3.608   1.356
3.145   1.000

 STD. DEVIATION OF DAILY            0.018   0.004   3.164   2.226
2.527   0.859
   HEAD ON TOP OF LAYER  2          1.115   0.570   0.933   0.383
1.113   0.409


*******************************************************************
**************


*******************************************************************
**************

                           ANNUAL TOTALS FOR YEAR    6
 ------------------------------------------------------------------
---------------
                                          INCHES          CU.
FEET     PERCENT
                                         --------
----------    -------
   PRECIPITATION                          29.57
354219.125    100.00

   RUNOFF                                  0.000
0.000      0.00

   EVAPOTRANSPIRATION                     16.395
196391.234     55.44
```

```
   DRAINAGE COLLECTED FROM LAYER  1        14.2842
171110.641     48.31

   PERC./LEAKAGE THROUGH LAYER  3           0.002070
24.794      0.01

   AVG. HEAD ON TOP OF LAYER  2             2.2852

   CHANGE IN WATER STORAGE                 -1.111        -
13307.590     -3.76

   SOIL WATER AT START OF YEAR             12.640
151415.516

   SOIL WATER AT END OF YEAR               11.314
135531.016

   SNOW WATER AT START OF YEAR              0.751
8990.763      2.54

   SNOW WATER AT END OF YEAR                0.966
11567.672      3.27

   ANNUAL WATER BUDGET BALANCE              0.0000
0.035      0.00
```

****
****

****
****

MONTHLY TOTALS (IN INCHES) FOR YEAR 7

	JAN/JUL	FEB/AUG	MAR/SEP	APR/OCT	MAY/NOV	JUN/DEC
PRECIPITATION	0.70	0.54	1.87	2.47	4.50	6.03
	5.57	2.56	2.03	3.90	1.25	0.79

```
 RUNOFF                              0.000   0.000   0.000   0.000
0.000   0.000
                                     0.000   0.000   0.000   0.000
0.000   0.000

 EVAPOTRANSPIRATION                  0.388   0.353   0.513   0.490
3.668   4.371
                                     2.852   1.928   0.892   1.832
0.375   0.369

 LATERAL DRAINAGE COLLECTED          0.1269  0.0291  0.0084  0.8051
3.7345  1.5022
   FROM LAYER  1                     2.9112  1.5892  0.5342  1.9970
0.8128  0.2081

 PERCOLATION/LEAKAGE THROUGH         0.0000  0.0000  0.0000  0.0001
0.0005  0.0002
   LAYER  3                          0.0004  0.0002  0.0001  0.0003
0.0001  0.0000


 ------------------------------------------------------------------
---------------
                    MONTHLY SUMMARIES FOR DAILY HEADS (INCHES)
 ------------------------------------------------------------------
---------------


 AVERAGE DAILY HEAD ON               0.241   0.061   0.016   1.576
7.027   2.947
   TOP OF LAYER  2                   5.502   3.017   1.048   3.791
1.594   0.395

 STD. DEVIATION OF DAILY             0.099   0.023   0.007   1.586
2.149   0.373
   HEAD ON TOP OF LAYER  2           2.321   0.892   0.247   1.730
0.633   0.162


*******************************************************************
**************


*******************************************************************
**************

                          ANNUAL TOTALS FOR YEAR    7
 ------------------------------------------------------------------
---------------
```

```
                                                INCHES          CU.
FEET      PERCENT
                                               --------
----------    -------
   PRECIPITATION                                32.21
385843.656    100.00

   RUNOFF                                        0.000
0.000       0.00

   EVAPOTRANSPIRATION                           18.030
215985.375     55.98

   DRAINAGE COLLECTED FROM LAYER  1             14.2588
170806.391     44.27

   PERC./LEAKAGE THROUGH LAYER  3                0.002054
24.600       0.01

   AVG. HEAD ON TOP OF LAYER  2                  2.2679

   CHANGE IN WATER STORAGE                      -0.081          -
972.793     -0.25

   SOIL WATER AT START OF YEAR                  11.314
135531.016

   SOIL WATER AT END OF YEAR                    11.864
142118.469

   SNOW WATER AT START OF YEAR                   0.966
11567.672       3.00

   SNOW WATER AT END OF YEAR                     0.335
4007.421       1.04

   ANNUAL WATER BUDGET BALANCE                   0.0000
0.087       0.00

*****************************************************************
**************

*****************************************************************
**************
```

MONTHLY TOTALS (IN INCHES) FOR YEAR 8

	JAN/JUL	FEB/AUG	MAR/SEP	APR/OCT	MAY/NOV	JUN/DEC
PRECIPITATION	0.84	0.33	2.47	1.25	2.67	4.55
	4.53	4.01	2.82	1.78	0.85	1.35
RUNOFF	0.000	0.000	0.000	0.000	0.000	0.000
	0.000	0.000	0.000	0.000	0.000	0.000
EVAPOTRANSPIRATION	0.632	0.674	0.462	0.049	2.915	3.832
	3.020	2.836	2.426	0.956	0.753	0.336
LATERAL DRAINAGE COLLECTED	0.0501	0.0117	0.0137	0.7036	2.4579	1.2395
FROM LAYER 1	0.6759	1.4940	0.8460	0.7978	0.5350	0.2620
PERCOLATION/LEAKAGE THROUGH	0.0000	0.0000	0.0000	0.0001	0.0003	0.0002
LAYER 3	0.0001	0.0002	0.0001	0.0001	0.0001	0.0000

MONTHLY SUMMARIES FOR DAILY HEADS (INCHES)

AVERAGE DAILY HEAD ON	0.095	0.024	0.026	1.380	4.654	2.432
TOP OF LAYER 2	1.283	2.836	1.660	1.515	1.050	0.497
STD. DEVIATION OF DAILY	0.039	0.009	0.090	0.679	2.194	0.318
HEAD ON TOP OF LAYER 2	0.540	0.536	0.384	0.287	0.247	0.204

```
*****************************************************************
**************

*****************************************************************
**************

                          ANNUAL TOTALS FOR YEAR     8
 ---------------------------------------------------------------
---------------
                                          INCHES          CU.
FEET     PERCENT
                                         --------
----------    -------
   PRECIPITATION                          27.45
328823.562    100.00

   RUNOFF                                  0.000
0.000      0.00

   EVAPOTRANSPIRATION                     18.891
226289.719     68.82

   DRAINAGE COLLECTED FROM LAYER  1        9.0873
108856.430     33.10

   PERC./LEAKAGE THROUGH LAYER  3          0.001372
16.435      0.00

   AVG. HEAD ON TOP OF LAYER  2            1.4543

   CHANGE IN WATER STORAGE                -0.529          -
6339.009     -1.93

   SOIL WATER AT START OF YEAR            11.864
142118.469

   SOIL WATER AT END OF YEAR              10.655
127636.836

   SNOW WATER AT START OF YEAR             0.335
4007.421      1.22

   SNOW WATER AT END OF YEAR               1.014
12150.047      3.70

   ANNUAL WATER BUDGET BALANCE             0.0000          -
0.017      0.00
```

```
*****************************************************************
**************

*****************************************************************
**************

                    MONTHLY TOTALS (IN INCHES) FOR YEAR    9
 ---------------------------------------------------------------
---------------

                                   JAN/JUL FEB/AUG MAR/SEP APR/OCT
MAY/NOV JUN/DEC
                                   ------- ------- ------- -------
------- -------

 PRECIPITATION                      2.37    0.35    2.02    2.08
3.03    3.57
                                    2.57    2.42    3.75    1.03
2.53    2.17

 RUNOFF                             0.000   0.000   0.000   0.000
0.000   0.000
                                    0.000   0.000   0.000   0.000
0.000   0.000

 EVAPOTRANSPIRATION                 0.413   0.392   0.426   0.655
2.742   2.347
                                    1.963   1.561   2.476   1.511
0.769   0.375

 LATERAL DRAINAGE COLLECTED         0.0631  0.0145  0.0042  1.7561
2.7940  1.4406
   FROM LAYER  1                    1.4314  0.5564  0.4633  0.8857
0.8024  0.4560

 PERCOLATION/LEAKAGE THROUGH        0.0000  0.0000  0.0000  0.0002
0.0004  0.0002
   LAYER  3                         0.0002  0.0001  0.0001  0.0001
0.0001  0.0001


 ---------------------------------------------------------------
---------------
                    MONTHLY SUMMARIES FOR DAILY HEADS (INCHES)
 ---------------------------------------------------------------
```

```
---------------

 AVERAGE DAILY HEAD ON              0.120   0.030   0.008   3.415
5.280   2.826
   TOP OF LAYER  2                  2.717   1.056   0.909   1.681
1.574   0.866

 STD. DEVIATION OF DAILY            0.049   0.011   0.003   2.078
2.178   1.255
   HEAD ON TOP OF LAYER  2          0.584   0.224   0.116   0.476
0.535   0.353

*****************************************************************
**************



*****************************************************************
**************

                          ANNUAL TOTALS FOR YEAR     9
 ---------------------------------------------------------------
---------------
                                          INCHES          CU.
FEET     PERCENT
                                         --------
----------    -------
   PRECIPITATION                          27.89
334094.375    100.00

   RUNOFF                                  0.000
0.000      0.00

   EVAPOTRANSPIRATION                     15.629
187214.125     56.04

   DRAINAGE COLLECTED FROM LAYER  1       10.6675
127786.125     38.25

   PERC./LEAKAGE THROUGH LAYER  3          0.001582
18.947      0.01

   AVG. HEAD ON TOP OF LAYER  2            1.7069

   CHANGE IN WATER STORAGE                 1.592
19075.178      5.71

   SOIL WATER AT START OF YEAR            10.655
127636.836
```

```
   SOIL WATER AT END OF YEAR                    11.211
134302.141

   SNOW WATER AT START OF YEAR                   1.014
12150.047      3.64

   SNOW WATER AT END OF YEAR                     2.050
24559.910      7.35

   ANNUAL WATER BUDGET BALANCE                   0.0000
0.000      0.00

*****************************************************************
**************
```

```
*****************************************************************
**************

                    MONTHLY TOTALS (IN INCHES) FOR YEAR   10
 ---------------------------------------------------------------
---------------

                                   JAN/JUL FEB/AUG MAR/SEP APR/OCT
MAY/NOV JUN/DEC
                                   ------- ------- ------- -------
------- -------

 PRECIPITATION                      1.23    0.49    2.43    2.43
1.99    2.97
                                    1.98    6.68    3.82    2.35
1.16    1.17

 RUNOFF                             0.000   0.000   0.000   0.000
0.000   0.000
                                    0.000   0.000   0.000   0.000
0.000   0.000

 EVAPOTRANSPIRATION                 0.354   0.465   0.588   0.753
1.992   2.191
                                    1.274   4.017   2.180   1.371
0.373   0.324

 LATERAL DRAINAGE COLLECTED         0.1099  0.0252  0.4911  2.0504
2.7854  1.4461
```

```
   FROM LAYER  1                    0.8479  1.3403  1.8770  2.0307
0.5760  0.1477

 PERCOLATION/LEAKAGE THROUGH        0.0000  0.0000  0.0001  0.0003
0.0004  0.0002
   LAYER  3                         0.0001  0.0002  0.0003  0.0003
0.0001  0.0000


 ------------------------------------------------------------------
---------------
                    MONTHLY SUMMARIES FOR DAILY HEADS (INCHES)
 ------------------------------------------------------------------
---------------


 AVERAGE DAILY HEAD ON              0.209   0.053   0.932   3.973
5.268   2.837
   TOP OF LAYER  2                  1.610   2.544   3.682   3.855
1.130   0.280

 STD. DEVIATION OF DAILY            0.086   0.020   0.987   2.525
2.135   0.605
   HEAD ON TOP OF LAYER  2          0.367   1.627   1.093   1.358
0.446   0.115


*****************************************************************
**************


*****************************************************************
**************

                           ANNUAL TOTALS FOR YEAR   10
 ------------------------------------------------------------------
---------------
                                          INCHES          CU.
FEET     PERCENT
                                         --------
----------    -------
   PRECIPITATION                          28.70
343797.344    100.00

   RUNOFF                                  0.000
0.000      0.00

   EVAPOTRANSPIRATION                     15.882
190253.031     55.34
```

```
   DRAINAGE COLLECTED FROM LAYER  1          13.7277
164444.687     47.83

   PERC./LEAKAGE THROUGH LAYER  3             0.002003
23.994      0.01

   AVG. HEAD ON TOP OF LAYER  2               2.1978

   CHANGE IN WATER STORAGE                   -0.912        -
10924.309     -3.18

   SOIL WATER AT START OF YEAR               11.211
134302.141

   SOIL WATER AT END OF YEAR                 11.504
137805.062

   SNOW WATER AT START OF YEAR                2.050
24559.910      7.14

   SNOW WATER AT END OF YEAR                  0.846
10132.687      2.95

   ANNUAL WATER BUDGET BALANCE                0.0000          -
0.048      0.00


*****************************************************************
**************


*****************************************************************
**************

          AVERAGE MONTHLY VALUES IN INCHES FOR YEARS    1 THROUGH
10
 ---------------------------------------------------------------
---------------

                          JAN/JUL  FEB/AUG  MAR/SEP  APR/OCT
MAY/NOV  JUN/DEC
                          -------  -------  -------  -------
-------  -------
   PRECIPITATION
   -------------
     TOTALS                 1.09     0.72     1.81     2.15
3.52     4.53
```

```
                                3.72      3.43      3.13      1.54
1.61      1.47

     STD. DEVIATIONS            0.54      0.33      0.54      1.22
1.36      2.13
                                1.39      1.52      0.69      0.96
0.99      0.61

   RUNOFF
   ------
     TOTALS                     0.000     0.000     0.000     0.000
0.000     0.000
                                0.000     0.000     0.000     0.000
0.000     0.000

     STD. DEVIATIONS            0.000     0.000     0.000     0.000
0.000     0.000
                                0.000     0.000     0.000     0.000
0.000     0.000

   EVAPOTRANSPIRATION
   ------------------
     TOTALS                     0.416     0.485     0.516     0.442
2.818     3.181
                                2.460     2.212     2.118     1.020
0.712     0.386

     STD. DEVIATIONS            0.101     0.107     0.102     0.258
0.806     1.003
                                0.938     1.046     0.567     0.431
0.294     0.061

   LATERAL DRAINAGE COLLECTED FROM LAYER  1
   ----------------------------------------
     TOTALS                     0.0669    0.0154    0.2479    1.2488
3.1575    1.5889
                                1.6275    1.2944    1.0440    0.9100
0.5415    0.2361

     STD. DEVIATIONS            0.0499    0.0114    0.3573    0.9041
0.7573    0.5429
                                1.1817    0.4478    0.4726    0.6059
0.4488    0.1851

   PERCOLATION/LEAKAGE THROUGH LAYER  3
   -------------------------------------
     TOTALS                     0.0000    0.0000    0.0000    0.0002
0.0004    0.0002
                                0.0002    0.0002    0.0002    0.0001
0.0001    0.0000

     STD. DEVIATIONS            0.0000    0.0000    0.0001    0.0001
```

```
0.0001   0.0001
                                0.0002   0.0001   0.0001   0.0001
0.0001   0.0000

 ------------------------------------------------------------------
---------------
                AVERAGES OF MONTHLY AVERAGED DAILY HEADS (INCHES)
 ------------------------------------------------------------------
---------------


   DAILY AVERAGE HEAD ON TOP OF LAYER  2
   -------------------------------------
     AVERAGES                   0.1270   0.0322   0.4669   2.4250
5.9542   3.1117
                                3.0780   2.4572   2.0480   1.7275
1.0623   0.4482

     STD. DEVIATIONS            0.0947   0.0241   0.6722   1.7400
1.4049   1.0562
                                2.2178   0.8500   0.9271   1.1503
0.8804   0.3514


*****************************************************************
**************



*****************************************************************
**************

      AVERAGE ANNUAL TOTALS & (STD. DEVIATIONS) FOR YEARS    1
THROUGH   10
 ------------------------------------------------------------------
---------------
                                        INCHES            CU. FEET
PERCENT
                                   -------------------
-------------   ---------
  PRECIPITATION                    28.72     (   2.922)     344060.9
100.00

  RUNOFF                            0.000    (  0.0000)
0.00      0.000

  EVAPOTRANSPIRATION               16.766    (  1.9687)
200844.78     58.375

  LATERAL DRAINAGE COLLECTED      11.97891 (  2.73722)
```

```
143495.391   41.70639
    FROM LAYER  1

  PERCOLATION/LEAKAGE THROUGH     0.00175 (  0.00036)
20.912     0.00608
    LAYER  3

  AVERAGE HEAD ON TOP             1.912 (    0.434)
    OF LAYER  2

  CHANGE IN WATER STORAGE        -0.025   (  0.9559)       -
300.25     -0.087


*****************************************************************
**************
```

```
*****************************************************************
*************

                 PEAK DAILY VALUES FOR YEARS    1 THROUGH   10
    ------------------------------------------------------------
-----------
                                                  (INCHES)
(CU. FT.)
                                                 ----------
-------------
       PRECIPITATION                               3.44
41207.762

       RUNOFF                                      0.000
0.0000

       DRAINAGE COLLECTED FROM LAYER  1            0.21157
2534.41089

       PERCOLATION/LEAKAGE THROUGH LAYER  3        0.000027
0.32451

       AVERAGE HEAD ON TOP OF LAYER  2            12.000

       MAXIMUM HEAD ON TOP OF LAYER  2            14.925

       LOCATION OF MAXIMUM HEAD IN LAYER  1
             (DISTANCE FROM DRAIN)                40.0 FEET

       SNOW WATER                                  4.52
54108.9922


       MAXIMUM VEG. SOIL WATER (VOL/VOL)                    0.4170

       MINIMUM VEG. SOIL WATER (VOL/VOL)                    0.0180

        ***  Maximum heads are computed using McEnroe's
equations.  ***

            Reference:  Maximum Saturated Depth over Landfill
Liner
                        by Bruce M. McEnroe, University of
Kansas
                        ASCE Journal of Environmental
Engineering
                        Vol. 119, No. 2, March 1993, pp. 262-
270.
```

****
****

****
****

FINAL WATER STORAGE AT END OF YEAR 10

LAYER	(INCHES)	(VOL/VOL)
1	1.2559	0.1047
2	0.0000	0.0000
3	10.2480	0.4270
SNOW WATER	0.846	

****
****

****
****

```
******************************************************************
*************

******************************************************************
*************
 **
**
 **
**
 **                HYDROLOGIC EVALUATION OF LANDFILL PERFORMANCE
**
 **                  HELP MODEL VERSION 3.07  (1 NOVEMBER 1997)
**
 **                    DEVELOPED BY ENVIRONMENTAL LABORATORY
**
 **                      USAE WATERWAYS EXPERIMENT STATION
**
 **               FOR USEPA RISK REDUCTION ENGINEERING LABORATORY
**
 **
**
 **
**

******************************************************************
*************

******************************************************************
*************


 PRECIPITATION DATA FILE:     c:\download\Phase9.D4
 TEMPERATURE DATA FILE:       c:\download\Phase9.D7
 SOLAR RADIATION DATA FILE:   c:\download\Phase9.D13
 EVAPOTRANSPIRATION DATA:     c:\download\Phase9.D11
 SOIL AND DESIGN DATA FILE:   c:\download\Phase9.D10
 OUTPUT DATA FILE:            c:\download\Phase9.OUT


 TIME:  10:39     DATE:   5/31/2013


******************************************************************
*************
```

TITLE: Regional Lnadfill Phase 9

****
****

NOTE: INITIAL MOISTURE CONTENT OF THE LAYERS AND SNOW WATER WERE
COMPUTED AS NEARLY STEADY-STATE VALUES BY THE PROGRAM.

LAYER 1

TYPE 2 - LATERAL DRAINAGE LAYER
MATERIAL TEXTURE NUMBER 1

THICKNESS	=	12.00	INCHES
POROSITY	=	0.4170	VOL/VOL
FIELD CAPACITY	=	0.0450	VOL/VOL
WILTING POINT	=	0.0180	VOL/VOL
INITIAL SOIL WATER CONTENT	=	0.1101	VOL/VOL
EFFECTIVE SAT. HYD. COND.	=	0.999999978000E-02	CM/SEC
SLOPE	=	3.00	PERCENT
DRAINAGE LENGTH	=	100.0	FEET

NOTE: SATURATED HYDRAULIC CONDUCTIVITY IS MULTIPLIED BY 1.80
FOR ROOT CHANNELS IN TOP HALF OF EVAPORATIVE ZONE.

LAYER 2

TYPE 4 - FLEXIBLE MEMBRANE LINER
MATERIAL TEXTURE NUMBER 35

THICKNESS	=	0.06	INCHES
POROSITY	=	0.0000	VOL/VOL
FIELD CAPACITY	=	0.0000	VOL/VOL
WILTING POINT	=	0.0000	VOL/VOL
INITIAL SOIL WATER CONTENT	=	0.0000	VOL/VOL
EFFECTIVE SAT. HYD. COND.	=	0.199999996000E-12	CM/SEC
FML PINHOLE DENSITY	=	1.00	HOLES/ACRE
FML INSTALLATION DEFECTS	=	4.00	HOLES/ACRE
FML PLACEMENT QUALITY	=	3 - GOOD	

LAYER 3

TYPE 3 - BARRIER SOIL LINER
MATERIAL TEXTURE NUMBER 16

THICKNESS	=	24.00	INCHES
POROSITY	=	0.4270	VOL/VOL
FIELD CAPACITY	=	0.4180	VOL/VOL
WILTING POINT	=	0.3670	VOL/VOL
INITIAL SOIL WATER CONTENT	=	0.4270	VOL/VOL
EFFECTIVE SAT. HYD. COND.	=	0.100000001000E-06	CM/SEC

GENERAL DESIGN AND EVAPORATIVE ZONE DATA

NOTE: SCS RUNOFF CURVE NUMBER WAS COMPUTED FROM DEFAULT SOIL DATA BASE USING SOIL TEXTURE # 1 WITH BARE GROUND CONDITIONS, A SURFACE SLOPE OF 3.% AND A SLOPE LENGTH OF 100. FEET.

SCS RUNOFF CURVE NUMBER	=	74.90	
FRACTION OF AREA ALLOWING RUNOFF	=	0.0	PERCENT
AREA PROJECTED ON HORIZONTAL PLANE	=	3.360	ACRES
EVAPORATIVE ZONE DEPTH	=	8.0	INCHES
INITIAL WATER IN EVAPORATIVE ZONE	=	0.979	INCHES
UPPER LIMIT OF EVAPORATIVE STORAGE	=	3.336	INCHES
LOWER LIMIT OF EVAPORATIVE STORAGE	=	0.144	INCHES
INITIAL SNOW WATER	=	0.998	INCHES
INITIAL WATER IN LAYER MATERIALS	=	11.569	INCHES
TOTAL INITIAL WATER	=	12.567	INCHES
TOTAL SUBSURFACE INFLOW	=	0.00	INCHES/YEAR

EVAPOTRANSPIRATION AND WEATHER DATA

NOTE: EVAPOTRANSPIRATION DATA WAS OBTAINED FROM

DULUTH MINNESOTA

STATION LATITUDE = 46.50 DEGREES
MAXIMUM LEAF AREA INDEX = 1.00
START OF GROWING SEASON (JULIAN DATE) = 144
END OF GROWING SEASON (JULIAN DATE) = 261
EVAPORATIVE ZONE DEPTH = 8.0 INCHES
AVERAGE ANNUAL WIND SPEED = 11.20 MPH
AVERAGE 1ST QUARTER RELATIVE HUMIDITY = 70.00 %
AVERAGE 2ND QUARTER RELATIVE HUMIDITY = 66.00 %
AVERAGE 3RD QUARTER RELATIVE HUMIDITY = 74.00 %
AVERAGE 4TH QUARTER RELATIVE HUMIDITY = 74.00 %

NOTE: PRECIPITATION DATA WAS SYNTHETICALLY GENERATED USING COEFFICIENTS FOR DULUTH MINNESOTA

NORMAL MEAN MONTHLY PRECIPITATION (INCHES)

JAN/JUL	FEB/AUG	MAR/SEP	APR/OCT	MAY/NOV	JUN/DEC
1.20	0.90	1.78	2.16	3.15	3.96
3.96	4.12	3.26	2.21	1.69	1.29

NOTE: TEMPERATURE DATA WAS SYNTHETICALLY GENERATED USING COEFFICIENTS FOR DULUTH MINNESOTA

NORMAL MEAN MONTHLY TEMPERATURE (DEGREES FAHRENHEIT)

JAN/JUL	FEB/AUG	MAR/SEP	APR/OCT	MAY/NOV	JUN/DEC
6.30	12.00	22.90	38.30	50.30	59.40
65.30	63.20	54.00	44.20	28.20	13.80

NOTE: SOLAR RADIATION DATA WAS SYNTHETICALLY GENERATED USING
COEFFICIENTS FOR DULUTH MINNESOTA
AND STATION LATITUDE = 46.50 DEGREES

****

MONTHLY TOTALS (IN INCHES) FOR YEAR 1

	JAN/JUL	FEB/AUG	MAR/SEP	APR/OCT	MAY/NOV	JUN/DEC
PRECIPITATION	0.51	0.83	1.24	1.02	1.64	3.93
	3.41	3.48	2.98	0.90	2.99	0.77
RUNOFF	0.000	0.000	0.000	0.000	0.000	0.000
	0.000	0.000	0.000	0.000	0.000	0.000
EVAPOTRANSPIRATION	0.510	0.500	0.429	0.181	1.447	3.886
	2.311	3.180	1.937	0.527	1.214	0.478
LATERAL DRAINAGE COLLECTED	0.1231	0.0282	0.0082	0.1109	2.1399	1.0232
FROM LAYER 1	0.4408	0.8917	1.0014	0.6634	0.2232	0.4502
PERCOLATION/LEAKAGE THROUGH	0.0000	0.0000	0.0000	0.0000	0.0003	0.0002
LAYER 3	0.0001	0.0001	0.0002	0.0001	0.0000	0.0001

MONTHLY SUMMARIES FOR DAILY HEADS (INCHES)

AVERAGE DAILY HEAD ON	0.234	0.059	0.016	0.218	4.013	2.007
TOP OF LAYER 2	0.837	1.693	1.964	1.259	0.438	0.855
STD. DEVIATION OF DAILY	0.096	0.022	0.006	0.479	2.009	0.258
HEAD ON TOP OF LAYER 2	0.325	0.434	0.689	0.507	0.073	0.261

****

****

ANNUAL TOTALS FOR YEAR 1

	INCHES	CU. FEET	PERCENT
PRECIPITATION	23.70	289064.187	100.00
RUNOFF	0.000	0.000	0.00
EVAPOTRANSPIRATION	16.599	202456.266	70.04
DRAINAGE COLLECTED FROM LAYER 1	7.1042	86648.547	29.98
PERC./LEAKAGE THROUGH LAYER 3	0.001087	13.254	0.00
AVG. HEAD ON TOP OF LAYER 2	1.1327		
CHANGE IN WATER STORAGE	-0.004	-	

53.937 -0.02

SOIL WATER AT START OF YEAR 11.569
141108.016

SOIL WATER AT END OF YEAR 11.565
141054.078

SNOW WATER AT START OF YEAR 0.998
12166.766 4.21

SNOW WATER AT END OF YEAR 0.998
12166.766 4.21

ANNUAL WATER BUDGET BALANCE 0.0000
0.047 0.00

****
****

****
****

MONTHLY TOTALS (IN INCHES) FOR YEAR 2

	JAN/JUL	FEB/AUG	MAR/SEP	APR/OCT	MAY/NOV	JUN/DEC
PRECIPITATION	0.65	0.95	1.83	5.02	4.48	5.12
	3.67	1.18	4.03	1.03	0.50	2.51
RUNOFF	0.000	0.000	0.000	0.000	0.000	0.000
	0.000	0.000	0.000	0.000	0.000	0.000
EVAPOTRANSPIRATION	0.386	0.428	0.462	0.617	2.356	2.911
	2.507	0.683	2.414	0.908		

```
0.811   0.339

 LATERAL DRAINAGE COLLECTED        0.1198  0.0275  0.2333  3.1576
4.8539  2.5266
   FROM LAYER  1                   2.1490  0.7523  0.8702  0.6893
0.2356  0.0943

 PERCOLATION/LEAKAGE THROUGH       0.0000  0.0000  0.0000  0.0004
0.0006  0.0004
   LAYER  3                        0.0003  0.0001  0.0001  0.0001
0.0000  0.0000


 ------------------------------------------------------------------
---------------
                    MONTHLY SUMMARIES FOR DAILY HEADS (INCHES)
 ------------------------------------------------------------------
---------------


 AVERAGE DAILY HEAD ON             0.227   0.058   0.443   5.282
8.459   4.904
   TOP OF LAYER  2                 4.079   1.428   1.707   1.309
0.462   0.179

 STD. DEVIATION OF DAILY           0.093   0.022   0.764   3.724
1.466   1.751
   HEAD ON TOP OF LAYER  2         1.316   0.563   0.432   0.393
0.097   0.071


*******************************************************************
**************


*******************************************************************
**************

                           ANNUAL TOTALS FOR YEAR    2
 ------------------------------------------------------------------
---------------
                                          INCHES          CU.
FEET     PERCENT
                                         --------
----------    -------
   PRECIPITATION                           30.97
377734.937    100.00

   RUNOFF                                   0.000
0.000      0.00
```

```
   EVAPOTRANSPIRATION                          14.820
180759.609     47.85

   DRAINAGE COLLECTED FROM LAYER  1            15.7093
191603.469     50.72

   PERC./LEAKAGE THROUGH LAYER  3               0.002124
25.901      0.01

   AVG. HEAD ON TOP OF LAYER  2                 2.3781

   CHANGE IN WATER STORAGE                      0.438
5346.020      1.42

   SOIL WATER AT START OF YEAR                 11.565
141054.078

   SOIL WATER AT END OF YEAR                   11.218
136819.719

   SNOW WATER AT START OF YEAR                  0.998
12166.766      3.22

   SNOW WATER AT END OF YEAR                    1.783
21747.146      5.76

   ANNUAL WATER BUDGET BALANCE                  0.0000          -
0.076      0.00

*****************************************************************
**************

*****************************************************************
**************

                    MONTHLY TOTALS (IN INCHES) FOR YEAR    3
 ---------------------------------------------------------------
---------------

                                   JAN/JUL FEB/AUG MAR/SEP APR/OCT
MAY/NOV JUN/DEC
                                   ------- ------- ------- -------
------- -------
```

```
 PRECIPITATION                      1.30    0.56    0.82    0.74
6.23    9.47
                                    5.20    2.18    2.92    1.15
1.01    1.18

 RUNOFF                             0.000   0.000   0.000   0.000
0.000   0.000
                                    0.000   0.000   0.000   0.000
0.000   0.000

 EVAPOTRANSPIRATION                 0.485   0.571   0.670   0.427
4.007   4.415
                                    4.574   1.790   2.191   1.027
0.747   0.358

 LATERAL DRAINAGE COLLECTED         0.0229  0.0053  0.0015  0.1544
3.2484  2.5786
   FROM LAYER  1                    4.1424  1.1606  0.9154  0.4050
0.1465  0.0389

 PERCOLATION/LEAKAGE THROUGH        0.0000  0.0000  0.0000  0.0000
0.0004  0.0003
   LAYER  3                         0.0005  0.0002  0.0001  0.0001
0.0000  0.0000


 ------------------------------------------------------------------
---------------
                    MONTHLY SUMMARIES FOR DAILY HEADS (INCHES)
 ------------------------------------------------------------------
---------------


 AVERAGE DAILY HEAD ON              0.043   0.011   0.003   0.303
6.055   4.711
   TOP OF LAYER  2                  7.233   2.203   1.796   0.769
0.287   0.074

 STD. DEVIATION OF DAILY            0.018   0.004   0.001   0.341
1.777   2.610
   HEAD ON TOP OF LAYER  2          2.394   0.718   0.560   0.135
0.107   0.030


*****************************************************************
**************


*****************************************************************
**************
```

ANNUAL TOTALS FOR YEAR 3

	INCHES	CU. FEET	PERCENT
PRECIPITATION	32.76	399567.219	100.00
RUNOFF	0.000	0.000	0.00
EVAPOTRANSPIRATION	21.260	259309.875	64.90
DRAINAGE COLLECTED FROM LAYER 1	12.8199	156362.062	39.13
PERC./LEAKAGE THROUGH LAYER 3	0.001754	21.392	0.01
AVG. HEAD ON TOP OF LAYER 2	1.9574		
CHANGE IN WATER STORAGE	-1.322	16126.202	-4.04
SOIL WATER AT START OF YEAR	11.218	136819.719	
SOIL WATER AT END OF YEAR	10.856	132414.281	
SNOW WATER AT START OF YEAR	1.783	21747.146	5.44
SNOW WATER AT END OF YEAR	0.822	10026.374	2.51
ANNUAL WATER BUDGET BALANCE	0.0000	0.107	0.00

****

```
*****************************************************************
**************

                    MONTHLY TOTALS (IN INCHES) FOR YEAR    4
 ---------------------------------------------------------------
---------------

                                   JAN/JUL FEB/AUG MAR/SEP APR/OCT
MAY/NOV JUN/DEC
                                   ------- ------- ------- -------
------- -------

 PRECIPITATION                      1.30    0.82    1.74    1.50
3.81    3.92
                                    1.36    4.38    2.44    0.90
0.60    2.09

 RUNOFF                             0.000   0.000   0.000   0.000
0.000   0.000
                                    0.000   0.000   0.000   0.000
0.000   0.000

 EVAPOTRANSPIRATION                 0.286   0.605   0.395   0.105
2.857   2.877
                                    1.242   2.894   1.390   0.645
0.845   0.397

 LATERAL DRAINAGE COLLECTED         0.0094  0.0022  0.0006  1.0024
3.4006  1.3343
   FROM LAYER  1                    1.0048  1.0514  0.9578  0.4628
0.1813  0.0699

 PERCOLATION/LEAKAGE THROUGH        0.0000  0.0000  0.0000  0.0001
0.0004  0.0002
   LAYER  3                         0.0002  0.0002  0.0001  0.0001
0.0000  0.0000


 ---------------------------------------------------------------
---------------
                    MONTHLY SUMMARIES FOR DAILY HEADS (INCHES)
 ---------------------------------------------------------------
---------------


 AVERAGE DAILY HEAD ON              0.018   0.004   0.001   1.966
6.010   2.618
   TOP OF LAYER  2                  1.907   1.996   1.879   0.878
0.356   0.133

 STD. DEVIATION OF DAILY            0.007   0.002   0.000   1.120
```

```
2.718   0.784
   HEAD ON TOP OF LAYER  2         0.758   0.905   0.428   0.338
0.053   0.054

*****************************************************************
**************


*****************************************************************
**************

                          ANNUAL TOTALS FOR YEAR    4
 ---------------------------------------------------------------
---------------
                                          INCHES          CU.
FEET     PERCENT
                                         --------
----------    -------
   PRECIPITATION                          24.86
303212.594    100.00

   RUNOFF                                  0.000
0.000      0.00

   EVAPOTRANSPIRATION                     14.538
177318.453     58.48

   DRAINAGE COLLECTED FROM LAYER  1        9.4774
115593.937     38.12

   PERC./LEAKAGE THROUGH LAYER  3          0.001370
16.714      0.01

   AVG. HEAD ON TOP OF LAYER  2            1.4805

   CHANGE IN WATER STORAGE                 0.843
10283.330      3.39

   SOIL WATER AT START OF YEAR            10.856
132414.281

   SOIL WATER AT END OF YEAR              10.729
130853.859

   SNOW WATER AT START OF YEAR             0.822
10026.374      3.31

   SNOW WATER AT END OF YEAR               1.793
21870.129      7.21
```

ANNUAL WATER BUDGET BALANCE 0.0000
0.148 0.00

****
****

****
****

MONTHLY TOTALS (IN INCHES) FOR YEAR 5

	JAN/JUL	FEB/AUG	MAR/SEP	APR/OCT	MAY/NOV	JUN/DEC
PRECIPITATION	1.17	1.36	1.38	2.26	2.94	4.38
	4.36	4.15	2.62	0.85	2.04	1.60
RUNOFF	0.000	0.000	0.000	0.000	0.000	0.000
	0.000	0.000	0.000	0.000	0.000	0.000
EVAPOTRANSPIRATION	0.322	0.358	0.538	0.458	2.421	3.328
	3.104	2.353	2.342	0.750	0.361	0.369
LATERAL DRAINAGE COLLECTED	0.0168	0.0039	0.8646	0.8591	3.2436	1.6673
FROM LAYER 1	1.6070	1.8450	0.7534	0.3384	0.2890	0.1023
PERCOLATION/LEAKAGE THROUGH	0.0000	0.0000	0.0001	0.0001	0.0004	0.0002
LAYER 3	0.0002	0.0003	0.0001	0.0001	0.0000	0.0000

```
-------------------------------------------------------------------
---------------
                    MONTHLY SUMMARIES FOR DAILY HEADS (INCHES)
-------------------------------------------------------------------
---------------


 AVERAGE DAILY HEAD ON            0.032   0.008   1.641   1.654
5.726   3.271
   TOP OF LAYER  2                3.051   3.503   1.478   0.642
0.567   0.194

 STD. DEVIATION OF DAILY          0.013   0.003   1.298   1.109
2.530   0.793
   HEAD ON TOP OF LAYER  2        0.660   1.449   0.191   0.245
0.191   0.080


*******************************************************************
**************


*******************************************************************
**************

                           ANNUAL TOTALS FOR YEAR    5
-------------------------------------------------------------------
---------------
                                          INCHES          CU.
FEET     PERCENT
                                         --------
----------    -------
   PRECIPITATION                          29.11
355048.844    100.00

   RUNOFF                                  0.000
0.000      0.00

   EVAPOTRANSPIRATION                     16.704
203733.828     57.38

   DRAINAGE COLLECTED FROM LAYER  1       11.5903
141364.703     39.82

   PERC./LEAKAGE THROUGH LAYER  3          0.001672
20.395      0.01

   AVG. HEAD ON TOP OF LAYER  2            1.8139

   CHANGE IN WATER STORAGE                 0.814
```

9929.863 2.80

SOIL WATER AT START OF YEAR 10.729
130853.859

SOIL WATER AT END OF YEAR 12.585
153499.625

SNOW WATER AT START OF YEAR 1.793
21870.129 6.16

SNOW WATER AT END OF YEAR 0.751
9154.230 2.58

ANNUAL WATER BUDGET BALANCE 0.0000
0.050 0.00

****
****

****
****

MONTHLY TOTALS (IN INCHES) FOR YEAR 6

	JAN/JUL	FEB/AUG	MAR/SEP	APR/OCT	MAY/NOV	JUN/DEC
PRECIPITATION	0.80	1.02	2.30	2.75	3.91	1.39
	4.52	3.27	3.87	1.54	3.17	1.03
RUNOFF	0.000	0.000	0.000	0.000	0.000	0.000
	0.000	0.000	0.000	0.000	0.000	0.000
EVAPOTRANSPIRATION	0.383	0.500	0.670	0.656	3.575	1.343
	2.799	1.711	2.681	0.504		

```
1.124   0.510

 LATERAL DRAINAGE COLLECTED        0.0246  0.0056  0.7816  2.2596
3.1511  1.0925
   FROM LAYER  1                   0.8377  1.3533  1.7718  0.7129
1.6256  0.5584

 PERCOLATION/LEAKAGE THROUGH       0.0000  0.0000  0.0001  0.0003
0.0004  0.0002
   LAYER  3                        0.0001  0.0002  0.0003  0.0001
0.0002  0.0001


 ------------------------------------------------------------------
---------------
                    MONTHLY SUMMARIES FOR DAILY HEADS (INCHES)
 ------------------------------------------------------------------
---------------


 AVERAGE DAILY HEAD ON             0.047   0.012   1.271   4.088
5.650   2.143
   TOP OF LAYER  2                 1.590   2.569   3.476   1.353
3.189   1.060

 STD. DEVIATION OF DAILY           0.019   0.004   2.772   1.987
2.465   0.847
   HEAD ON TOP OF LAYER  2         0.908   0.563   0.858   0.406
1.053   0.433


*****************************************************************
**************



*****************************************************************
**************

                          ANNUAL TOTALS FOR YEAR    6
 ------------------------------------------------------------------
---------------
                                          INCHES          CU.
FEET     PERCENT
                                         --------
----------    -------
   PRECIPITATION                          29.57
360659.469    100.00

   RUNOFF                                  0.000
0.000      0.00
```

```
   EVAPOTRANSPIRATION                          16.457
200722.250     55.65

   DRAINAGE COLLECTED FROM LAYER  1            14.1748
172887.094     47.94

   PERC./LEAKAGE THROUGH LAYER  3               0.002004
24.441      0.01

   AVG. HEAD ON TOP OF LAYER  2                 2.2040

   CHANGE IN WATER STORAGE                     -1.064
12974.436     -3.60

   SOIL WATER AT START OF YEAR                 12.585
153499.625

   SOIL WATER AT END OF YEAR                   11.306
137901.422

   SNOW WATER AT START OF YEAR                  0.751
9154.230      2.54

   SNOW WATER AT END OF YEAR                    0.966
11777.993      3.27

   ANNUAL WATER BUDGET BALANCE                  0.0000
0.107      0.00

*****************************************************************
**************

*****************************************************************
**************

                    MONTHLY TOTALS (IN INCHES) FOR YEAR    7
 ---------------------------------------------------------------
---------------

                                   JAN/JUL FEB/AUG MAR/SEP APR/OCT
MAY/NOV JUN/DEC
                                   ------- ------- ------- -------
------- -------
```

```
 PRECIPITATION                      0.70    0.54    1.87    2.47
4.50    6.03
                                    5.57    2.56    2.03    3.90
1.25    0.79

 RUNOFF                             0.000   0.000   0.000   0.000
0.000   0.000
                                    0.000   0.000   0.000   0.000
0.000   0.000

 EVAPOTRANSPIRATION                 0.388   0.353   0.513   0.489
3.601   4.521
                                    3.130   1.485   1.361   1.734
0.378   0.374

 LATERAL DRAINAGE COLLECTED         0.1346  0.0309  0.0089  0.8035
3.8528  1.4432
   FROM LAYER  1                    2.7742  1.4479  0.5223  1.9264
0.8100  0.2072

 PERCOLATION/LEAKAGE THROUGH        0.0000  0.0000  0.0000  0.0001
0.0005  0.0002
   LAYER  3                         0.0004  0.0002  0.0001  0.0003
0.0001  0.0000


 ------------------------------------------------------------------
---------------
                    MONTHLY SUMMARIES FOR DAILY HEADS (INCHES)
 ------------------------------------------------------------------
---------------


 AVERAGE DAILY HEAD ON              0.255   0.065   0.017   1.545
6.785   2.831
   TOP OF LAYER  2                  5.072   2.749   1.025   3.657
1.589   0.393

 STD. DEVIATION OF DAILY            0.105   0.024   0.007   1.586
2.052   0.317
   HEAD ON TOP OF LAYER  2          2.281   0.757   0.166   1.794
0.632   0.162


*****************************************************************
**************


*****************************************************************
**************
```

ANNUAL TOTALS FOR YEAR 7

	INCHES	CU. FEET	PERCENT
PRECIPITATION	32.21	392859.000	100.00
RUNOFF	0.000	0.000	0.00
EVAPOTRANSPIRATION	18.326	223519.500	56.90
DRAINAGE COLLECTED FROM LAYER 1	13.9620	170291.828	43.35
PERC./LEAKAGE THROUGH LAYER 3	0.001968	24.006	0.01
AVG. HEAD ON TOP OF LAYER 2	2.1653		
CHANGE IN WATER STORAGE	-0.080	-976.406	-0.25
SOIL WATER AT START OF YEAR	11.306	137901.422	
SOIL WATER AT END OF YEAR	11.857	144622.719	
SNOW WATER AT START OF YEAR	0.966	11777.993	3.00
SNOW WATER AT END OF YEAR	0.335	4080.283	1.04
ANNUAL WATER BUDGET BALANCE	0.0000	0.060	0.00

****

```
*****************************************************************
**************

                    MONTHLY TOTALS (IN INCHES) FOR YEAR    8
 ---------------------------------------------------------------
---------------

                                   JAN/JUL FEB/AUG MAR/SEP APR/OCT
MAY/NOV JUN/DEC
                                   ------- ------- ------- -------
------- -------

 PRECIPITATION                      0.84    0.33    2.47    1.25
2.67    4.55
                                    4.53    4.01    2.82    1.78
0.85    1.35

 RUNOFF                             0.000   0.000   0.000   0.000
0.000   0.000
                                    0.000   0.000   0.000   0.000
0.000   0.000

 EVAPOTRANSPIRATION                 0.632   0.674   0.464   0.065
2.849   3.992
                                    3.319   2.811   2.394   0.915
0.699   0.336

 LATERAL DRAINAGE COLLECTED         0.0499  0.0116  0.0130  0.6904
2.5057  1.1461
   FROM LAYER  1                    0.6160  1.3027  0.7910  0.8246
0.5718  0.2759

 PERCOLATION/LEAKAGE THROUGH        0.0000  0.0000  0.0000  0.0001
0.0003  0.0002
   LAYER  3                         0.0001  0.0002  0.0001  0.0001
0.0001  0.0000


 ---------------------------------------------------------------
---------------
                    MONTHLY SUMMARIES FOR DAILY HEADS (INCHES)
 ---------------------------------------------------------------
---------------


 AVERAGE DAILY HEAD ON              0.095   0.024   0.025   1.354
4.618   2.248
   TOP OF LAYER  2                  1.170   2.473   1.552   1.565
1.122   0.524

 STD. DEVIATION OF DAILY            0.039   0.009   0.086   0.673
```

```
2.161   0.266
   HEAD ON TOP OF LAYER  2         0.379   0.481   0.427   0.291
0.263   0.215


*****************************************************************
**************


*****************************************************************
**************

                            ANNUAL TOTALS FOR YEAR    8
 ---------------------------------------------------------------
---------------
                                            INCHES          CU.
FEET     PERCENT
                                           --------
----------    -------
   PRECIPITATION                             27.45
334802.156    100.00

   RUNOFF                                     0.000
0.000      0.00

   EVAPOTRANSPIRATION                        19.151
233575.797     69.77

   DRAINAGE COLLECTED FROM LAYER  1          8.7988
107317.000     32.05

   PERC./LEAKAGE THROUGH LAYER  3            0.001324
16.145      0.00

   AVG. HEAD ON TOP OF LAYER  2              1.3974

   CHANGE IN WATER STORAGE                  -0.501          -
6106.799     -1.82

   SOIL WATER AT START OF YEAR              11.857
144622.719

   SOIL WATER AT END OF YEAR                10.677
130225.250

   SNOW WATER AT START OF YEAR               0.335
4080.283      1.22

   SNOW WATER AT END OF YEAR                 1.014
12370.956      3.70
```

```
   ANNUAL WATER BUDGET BALANCE                0.0000
0.013      0.00

*****************************************************************
**************

*****************************************************************
**************

                    MONTHLY TOTALS (IN INCHES) FOR YEAR    9
 ---------------------------------------------------------------
---------------

                                   JAN/JUL FEB/AUG MAR/SEP APR/OCT
MAY/NOV JUN/DEC
                                   ------- ------- ------- -------
------- -------

 PRECIPITATION                      2.37    0.35    2.02    2.08
3.03    3.57
                                    2.57    2.42    3.75    1.03
2.53    2.17

 RUNOFF                             0.000   0.000   0.000   0.000
0.000   0.000
                                    0.000   0.000   0.000   0.000
0.000   0.000

 EVAPOTRANSPIRATION                 0.413   0.392   0.426   0.659
2.808   2.452
                                    1.974   1.709   2.470   1.442
0.742   0.375

 LATERAL DRAINAGE COLLECTED         0.0664  0.0152  0.0044  1.8284
3.0564  1.1313
   FROM LAYER  1                    1.3274  0.4502  0.4055  0.8788
0.8342  0.4756

 PERCOLATION/LEAKAGE THROUGH        0.0000  0.0000  0.0000  0.0002
0.0004  0.0002
   LAYER  3                         0.0002  0.0001  0.0001  0.0001
0.0001  0.0001
```

```
-----------------------------------------------------------------
---------------
                    MONTHLY SUMMARIES FOR DAILY HEADS (INCHES)
-----------------------------------------------------------------
---------------


 AVERAGE DAILY HEAD ON            0.126   0.032   0.008   3.367
5.483   2.219
   TOP OF LAYER  2                2.520   0.855   0.796   1.668
1.636   0.903

 STD. DEVIATION OF DAILY          0.052   0.012   0.003   2.014
2.424   1.154
   HEAD ON TOP OF LAYER  2        0.521   0.272   0.143   0.436
0.542   0.369


*****************************************************************
**************


*****************************************************************
**************

                            ANNUAL TOTALS FOR YEAR    9
-----------------------------------------------------------------
---------------
                                          INCHES          CU.
FEET     PERCENT
                                         --------
----------    -------
   PRECIPITATION                          27.89
340168.812    100.00

   RUNOFF                                  0.000
0.000      0.00

   EVAPOTRANSPIRATION                     15.861
193454.375     56.87

   DRAINAGE COLLECTED FROM LAYER  1       10.4739
127747.648     37.55

   PERC./LEAKAGE THROUGH LAYER  3          0.001519
18.526      0.01

   AVG. HEAD ON TOP OF LAYER  2            1.6344

   CHANGE IN WATER STORAGE                 1.554
```

18948.154 5.57

SOIL WATER AT START OF YEAR 10.677
130225.250

SOIL WATER AT END OF YEAR 11.195
136537.906

SNOW WATER AT START OF YEAR 1.014
12370.956 3.64

SNOW WATER AT END OF YEAR 2.050
25006.453 7.35

ANNUAL WATER BUDGET BALANCE 0.0000
0.103 0.00

****
****

****
****

MONTHLY TOTALS (IN INCHES) FOR YEAR 10

	JAN/JUL	FEB/AUG	MAR/SEP	APR/OCT	MAY/NOV	JUN/DEC
PRECIPITATION	1.23	0.49	2.43	2.43	1.99	2.97
	1.98	6.68	3.82	2.35	1.16	1.17
RUNOFF	0.000	0.000	0.000	0.000	0.000	0.000
	0.000	0.000	0.000	0.000	0.000	0.000
EVAPOTRANSPIRATION	0.354	0.465	0.591	0.683	2.014	2.262
	1.430	3.985	2.090	1.312		

```
0.378   0.324

 LATERAL DRAINAGE COLLECTED        0.1146  0.0263  0.4785  2.1200
2.8247  1.4055
   FROM LAYER  1                   0.7783  1.2683  1.8845  2.0836
0.5869  0.1508

 PERCOLATION/LEAKAGE THROUGH       0.0000  0.0000  0.0001  0.0003
0.0004  0.0002
   LAYER  3                        0.0001  0.0002  0.0003  0.0003
0.0001  0.0000


 ------------------------------------------------------------------
---------------
                    MONTHLY SUMMARIES FOR DAILY HEADS (INCHES)
 ------------------------------------------------------------------
---------------


 AVERAGE DAILY HEAD ON             0.218   0.055   0.908   3.814
5.169   2.757
   TOP OF LAYER  2                 1.478   2.408   3.697   3.955
1.151   0.286

 STD. DEVIATION OF DAILY           0.089   0.021   0.964   2.170
2.115   0.530
   HEAD ON TOP OF LAYER  2         0.349   1.570   1.099   1.443
0.452   0.118


*****************************************************************
**************


*****************************************************************
**************

                          ANNUAL TOTALS FOR YEAR   10
 ------------------------------------------------------------------
---------------
                                          INCHES          CU.
FEET     PERCENT
                                         --------
----------    -------
   PRECIPITATION                          28.70
350048.219    100.00

   RUNOFF                                  0.000
0.000      0.00
```

```
   EVAPOTRANSPIRATION                          15.886
193762.641     55.35

   DRAINAGE COLLECTED FROM LAYER  1            13.7218
167362.422     47.81

   PERC./LEAKAGE THROUGH LAYER  3               0.001970
24.026      0.01

   AVG. HEAD ON TOP OF LAYER  2                 2.1580

   CHANGE IN WATER STORAGE                     -0.910        -
11100.913     -3.17

   SOIL WATER AT START OF YEAR                 11.195
136537.906

   SOIL WATER AT END OF YEAR                   11.489
140126.531

   SNOW WATER AT START OF YEAR                  2.050
25006.453      7.14

   SNOW WATER AT END OF YEAR                    0.846
10316.917      2.95

   ANNUAL WATER BUDGET BALANCE                  0.0000
0.042      0.00


*****************************************************************
**************


*****************************************************************
**************

          AVERAGE MONTHLY VALUES IN INCHES FOR YEARS    1 THROUGH
10
 ---------------------------------------------------------------
---------------

                          JAN/JUL  FEB/AUG  MAR/SEP  APR/OCT
MAY/NOV  JUN/DEC
                          -------  -------  -------  -------
-------  -------
```

```
   PRECIPITATION
   -------------
     TOTALS                    1.09      0.72      1.81      2.15
3.52      4.53
                               3.72      3.43      3.13      1.54
1.61      1.47

     STD. DEVIATIONS           0.54      0.33      0.54      1.22
1.36      2.13
                               1.39      1.52      0.69      0.96
0.99      0.61

   RUNOFF
   ------
     TOTALS                    0.000     0.000     0.000     0.000
0.000     0.000
                               0.000     0.000     0.000     0.000
0.000     0.000

     STD. DEVIATIONS           0.000     0.000     0.000     0.000
0.000     0.000
                               0.000     0.000     0.000     0.000
0.000     0.000

   EVAPOTRANSPIRATION
   ------------------
     TOTALS                    0.416     0.485     0.516     0.434
2.794     3.199
                               2.639     2.260     2.127     0.976
0.730     0.386

     STD. DEVIATIONS           0.101     0.107     0.100     0.237
0.781     1.023
                               0.981     0.969     0.447     0.408
0.297     0.061

   LATERAL DRAINAGE COLLECTED FROM LAYER  1
   ----------------------------------------
     TOTALS                    0.0682    0.0157    0.2395    1.2986
3.2277    1.5349
                               1.5678    1.1523    0.9873    0.8985
0.5504    0.2423

     STD. DEVIATIONS           0.0501    0.0115    0.3446    0.9972
0.7430    0.5703
                               1.1610    0.3908    0.4817    0.6099
0.4570    0.1888

   PERCOLATION/LEAKAGE THROUGH LAYER  3
   -------------------------------------
     TOTALS                    0.0000    0.0000    0.0000    0.0002
0.0004    0.0002
```

```
                                0.0002   0.0002   0.0001   0.0001
0.0001   0.0000

     STD. DEVIATIONS            0.0000   0.0000   0.0000   0.0001
0.0001   0.0001
                                0.0001   0.0001   0.0001   0.0001
0.0001   0.0000


 ------------------------------------------------------------------
---------------
                AVERAGES OF MONTHLY AVERAGED DAILY HEADS (INCHES)
 ------------------------------------------------------------------
---------------


   DAILY AVERAGE HEAD ON TOP OF LAYER  2
   -------------------------------------
     AVERAGES                   0.1295   0.0328   0.4333   2.3590
5.7967   2.9709
                                2.8937   2.1876   1.9368   1.7057
1.0797   0.4601

     STD. DEVIATIONS            0.0952   0.0242   0.6196   1.6931
1.2143   1.0407
                                2.0283   0.7420   0.9449   1.1578
0.8965   0.3585


******************************************************************
**************


******************************************************************
**************

      AVERAGE ANNUAL TOTALS & (STD. DEVIATIONS) FOR YEARS    1
THROUGH   10
 ------------------------------------------------------------------
---------------
                                          INCHES            CU. FEET
PERCENT
                                  -------------------
-------------   ---------
  PRECIPITATION                    28.72    (   2.922)     350316.6
100.00

  RUNOFF                            0.000   (  0.0000)
0.00      0.000
```

```
  EVAPOTRANSPIRATION              16.960   (  2.0659)
206861.27     59.050

  LATERAL DRAINAGE COLLECTED      11.78325 (  2.76048)
143717.875   41.02515
    FROM LAYER  1

  PERCOLATION/LEAKAGE THROUGH      0.00168 (  0.00035)
20.480     0.00585
    LAYER  3

  AVERAGE HEAD ON TOP              1.832 (    0.410)
    OF LAYER  2

  CHANGE IN WATER STORAGE         -0.023   (  0.9392)       -
283.13     -0.081


*****************************************************************
**************
```

```
*****************************************************************
*************

                 PEAK DAILY VALUES FOR YEARS    1 THROUGH   10
    ------------------------------------------------------------
-----------
                                                  (INCHES)
(CU. FT.)
                                                 ----------
-------------
       PRECIPITATION                              3.44
41956.992

       RUNOFF                                     0.000
0.0000

       DRAINAGE COLLECTED FROM LAYER  1           0.26786
3267.04492

       PERCOLATION/LEAKAGE THROUGH LAYER  3       0.000027
0.33041

       AVERAGE HEAD ON TOP OF LAYER  2           12.000

       MAXIMUM HEAD ON TOP OF LAYER  2           14.925

       LOCATION OF MAXIMUM HEAD IN LAYER  1
             (DISTANCE FROM DRAIN)               40.0 FEET

       SNOW WATER                                 4.52
55092.7891


       MAXIMUM VEG. SOIL WATER (VOL/VOL)                    0.4170

       MINIMUM VEG. SOIL WATER (VOL/VOL)                    0.0180

        ***  Maximum heads are computed using McEnroe's
equations.  ***

            Reference:  Maximum Saturated Depth over Landfill
Liner
                        by Bruce M. McEnroe, University of
Kansas
                        ASCE Journal of Environmental
Engineering
                        Vol. 119, No. 2, March 1993, pp. 262-
270.
```

****
****

****
****

FINAL WATER STORAGE AT END OF YEAR 10

LAYER	(INCHES)	(VOL/VOL)
1	1.2408	0.1034
2	0.0000	0.0000
3	10.2480	0.4270
SNOW WATER	0.846	

****
****

****
****

Appendix B

Pipe Strength Calculations

Design Report
St. Louis County Regional Landfill

Design Report - Appendix B

HDPE Pipe Calculations

(IPS 6" SDR 11 PE pipe)

Problem:

1. Determine estimated pipe deflection
2. Determine buckling FS
3. Determine wall compressive stress FS
4. Determine flow capacity FS

Max. prism load on pipes (Pv):

Material	Density (pcf)	Depth (ft)	Load (psf)
Cover soil	130	1.5	195
Drainage layer	120	1.0	120
Intermediate cover	120	1.0	120
MSW	50	77.0	3850
Drainage layer	120	1.0	120
Coarse aggregate	125	1.5	188

Pv = total vertical load (prism load) = 4593 psf
= 32 psi

Determine equivalent load on perforated pipe (P):

$$P = Pv \times \frac{12}{12 - H^1}$$

H^1 = perforation length / ft

$$= \frac{4 \text{ holes}}{10''} \quad \frac{0.5 \text{ in}}{\text{hole}} \quad \frac{12''}{1 \text{ ft}}$$

= 2.4 in/ft

$$P = 32 \quad \frac{12}{12 - 2.4}$$

= 40 psi = equivalent load on perforated pipe

Convert load to linear load per inch of pipe (P^1) :

$P^1 = P \times OD$ $\qquad$ $OD = 6.625"$

$= (40 \text{ psi})(6.625") = 265.0 \text{ lb/in}$

1. Estimate pipe deflection (X) :

Use Spangler's Modified Iowa Formula

$$\Delta X = \frac{DK P^1 R^3}{EI + 0.061 E^1 R^3}$$

Where $\quad$ D = deflection lag factor $= 1.25$

K = bedding const. $= 0.1$

R = mean pipe radius $= \frac{OD + 1D}{4}$

$= \frac{6.625 + 5.349}{4}$

$= 2.99"$

E = Modulus of elast. (50 year)
= 30,000 psi

I = Moment of inertia
$= \frac{(\text{wall thick})^3}{12} = \frac{(0.602 \text{ in})^3}{12} = 0.0182 \text{ in}$

E^1 = Modulus of passive soil resistance
= 3000 psi for coarse gran. bedding

$$\therefore \quad \Delta X = \frac{(1.25)(0.1)(265)(2.99)^3}{(30{,}000)(0.0182) + (0.061)(3000)(2.99)^3}$$

$\Delta X = 0.10$ in

$$\% \text{ deflection} = \frac{X}{OD} \times 100$$

$$= \frac{0.10 \text{ in}}{} \times 100 = \mathbf{1.52\%}$$

6.625

2. Buckling (constrained pipe)

$$P_{wc} = \frac{5.65}{N} \sqrt{R B^1 E^1 \frac{EI}{D_m^3}}$$

where P_{wc} = allowable constrained buckling press. (lb/in)

N = safety factor = Z

R = buoyancy reduction factor

$= 1 - 0.33 \frac{H^1}{H}$ where H1 = wtr. ht. above pipe, use H = cover ht.

3

$= 1 - .033 \frac{3^1}{77}$

$= 0.98$

$B^1 = (1 + 4\, e^{(-0.065H)})$

$= 1 + 4\, e^{-0.065(77)} == 1.027$

$E^1 = 3000$ psi

E = 30,000 psi

$I = 0.0182\ in^3$

D_m = mean pipe diameter = OD - 1.06 wall thick
= 6.625 - 1.06 (0.602)
= 5.99

$$Pwc = \frac{5.65}{} \sqrt{(0.98)(1.027)(3000)\ \frac{(30{,}000)(0.0182)}{}}$$

$= 247\ lb/in^2$

$$\therefore\ FS = \frac{P_{wc}}{P} = \frac{247}{40} = \mathbf{6}$$

3. Wall compressive stress

$$S = \frac{(P)(OD)}{288\,(t)}$$

where P = vert. load lb/

S = wall compressive stress, lb/in^2

t = wall thick, in

OD = outside dia., in

$$\therefore S = \frac{(40)(144)(6.625)}{288\,(0.602)} = 220\ lb/in^2$$

Recommended long-term compressive strength design value for Plexco/Spirolite PE pipe is 800 lb/in^2

$$\therefore FS = \frac{800}{220} = \mathbf{3.6}$$

4. Flow capacity

Consider flow as open channel flow by gravity.

Chezy-Manning eq.

$$Q = \frac{1.49}{n}(A)(r_H)^{2/3} \square \sqrt{S}$$

Where n = roughness coef., 0.009 for PE pipe

A = x-sect. area of flow $= \frac{\square}{4}(10)^2$

$= \frac{\square}{4}\left(5.349'' \times \frac{1'}{12''}\right)^2$

$= 0.16\ ft^2$

r_H = hydraulic radius = A/P, P = wetted perimeter

$= 0.16\ ft^2 / 2_{\square}\ ½\ (5.349'' \times 1'/12'')$

$= 0.11\ ft$

S = 0.01 ft/ft

$$Q = \frac{1.49}{0.009}(0.16\ ft^2)(0.11\ ft)\sqrt{0.01}$$

$= 0.61\ ft^3/s$

$= (0.61\ ft^3/s)(7.481\ gal/ft^3)(60\ sec/1\ min)$

$= 273\ gpm$

Expected maximum flow based on HELP model (one day peak) is approximately 3 gpm.

References include:

1.) Engineering Manuals, Chevron, 1992
2.) Application Notes, Chevron, 1987
3.) Civil engineering Reference Manual, Professional Publications, 1989 & 1992

4.) Calculations in approved permit applics. prepared by Wenck.

(Typed from HDPE Pipe Calculations pages 1 through 6 dated 6/28/96 by JWT.)

Appendix C

Technical Specifications

Design Report
St. Louis County Regional Landfill

SECTION 01010

SUMMARY OF WORK

PART 1 GENERAL

1.01 GENERAL AND SUPPLEMENTAL CONDITIONS

A. The General Conditions, Articles (1 through 17), and the Supplementary Conditions, which are attached to the Specification, shall govern the work of all persons engaged in the performance of the contract and shall form a part of the contract.

1.02 ARRANGEMENTS OF DETAILED SPECIFICATIONS AND DRAWINGS

A. The detailed specifications arrangement is based upon the CSI MASTERFORMAT and incorporates the following Divisions:

Division 1	General Requirements
Division 2	Site Work

B. The Drawings on which the proposal and contract are based consist of sheets (see Schedule of Drawings). Each sheet bears the following general title:

St. Louis County Regional Landfill Phase Liner Construction

The drawings described above are to be supplemented by additional shop and dimension drawings to be prepared by the CONTRACTOR/Subcontractor as set forth in the Specification.

C. The work shall be bid under a single prime contract.

1.03 WORK COVERED BY CONTRACT DOCUMENTS

A. The broad scope of the project covered under these contract documents includes, but is not necessarily limited to the construction of Phase of the Municipal Solid Waste Landfill for Saint Louis County, Virginia, Minnesota. The major elements associated with the project are:

- Rough grading and earthwork.
- Excavation of 5-foot sub-cut.
- Construction of a 5-foot subbase layer.
- Construction of a 24-inch clay liner layer.
- Coordination of 60-mil HDPE liner placement.
- Construction of a 12-inch granular drainage layer.
- Construction of a leachate collection, detection and transmission system.
- Surveying.
- Liner leak detection testing service.
- Installation of electrical.
- Finish site work.

PART 2 PRODUCTS

Not Used

PART 3 EXECUTION

Not Used

END OF SECTION 01010

SECTION 01019

CONTRACT CONSIDERATIONS

PART 1 GENERAL

1.01 SECTION INCLUDES

A. Inspection and testing.

B. Application for Payment.

C. Change procedures.

D. CONTRACTOR's Use of Premises.

1.02 RELATED SECTIONS

A. General Conditions, Supplementary Conditions, and Division 1 sections apply to this work.

1.03 INSPECTION AND TESTING

A. All soils testing performed to meet "material prequalification" requirements as dictated by the Specifications will be completed by a testing laboratory approved by the OWNER and paid directly by the CONTRACTOR.

B. All soil testing associated with "verifying compliance" of the construction to the project specifications will be completed by an independent testing laboratory selected by the OWNER and paid directly by the OWNER. Costs of retesting upon failure of previous tests will be the responsibility of the CONTRACTOR.

C. Testing of piping shall be performed by the CONTRACTOR in the presence of the ENGINEER and should be included in the cost of the project.

D. CONTRACTOR shall inform ENGINEER when construction is ready for testing, allowing 24 hours notice for mobilization of the testing firm.

1.04 APPLICATIONS FOR PAYMENT

A. Submit three copies of each application on AIA Form G702 - Application and Certificate for Payment or Commission approved Application for Payment Form.

B. Content and Format: Utilize Bid Schedule for listing items in Application for Payment.

C. Payment Period: Monthly.

D. Submit payment request to ENGINEER by the first of each month for consideration and payment by the OWNER within 30 days.

E. Final payment will be contingent upon receipt of as-builts and final survey documents.

1.05 CHANGE PROCEDURES

A. The ENGINEER will advise of minor changes in the Work not involving an adjustment to Contract Sum/Price or Contract Time.

B. The ENGINEER may issue a Change Order which includes a detailed description of a proposed change with supplementary or revised Drawings and specifications, a change in Contract Time for executing the change and the period of time during which the requested price will be considered valid. CONTRACTOR will prepare and submit an estimate of the proposed change within 10 days of the change order notice.

C. The CONTRACTOR may propose a change by submitting request for change to the ENGINEER, describing the proposed change and its full effect on the Work. Include a statement describing the reason for the change, and the effect on the Contract Sum/Price and Contract Time with full documentation.

D. Execution of Change Orders: ENGINEER will issue Change Orders for signatures of parties as provided in the Conditions of the Contract.

1.06 CONTRACTOR'S USE OF PREMISES

A. The CONTRACTOR shall submit a layout of the existing site and facilities indicating what area is proposed to be used for construction operations. The CONTRACTOR shall also indicate the hours of operation it plans on implementing during the period of the work. Special arrangements with the OWNER will be required in order to perform work outside the limits of the normal landfill operating hours.

B. The CONTRACTOR shall be solely responsible for obtaining and paying all costs in connection with any additional work area, storage sites, access to the site, or temporary right-of-way, which may be required for proper completion of the Work.

C. The responsibility for protection and safekeeping of equipment and materials on or near the site will be entirely that of the CONTRACTOR. No claim shall be made against the OWNER by reason of any act of any employee or trespasser. It shall be understood that should any occasion arise necessitating use by the OWNER of sites occupied by stored materials and equipment, the CONTRACTOR shall immediately move same. No materials or equipment may be placed upon property of the OWNER without prior approval of the OWNER.

D. For access to and fulfillment of the Contract, the project site shall be comprised of property, right-of-way or easements provided by the OWNER as indicated. The CONTRACTOR, in the prosecution of the work, shall not trespass or allow any of his employees to trespass upon the abutting lands or other lands in the vicinity. The CONTRACTOR may, at his own cost, make suitable arrangements for any temporary usage of private lands, but he and his surety on his bond shall protect, indemnify, and hold harmless the OWNER, ENGINEER and its officers and employees against any claim arising from temporary usage of private lands.

E. CONTRACTOR shall not interfere with daily landfill operations during the work

completed under this contract.

F. All existing haul roads shall be maintained throughout construction and shall be left in their original condition upon completion of the work.

PART 2 PRODUCTS

Not Used

PART 3 EXECUTION

Not Used

END OF SECTION 01019

SECTION 01025

METHODS OF MEASUREMENT AND PAYMENT

PART 1 GENERAL

1.01 SECTION INCLUDES

A. Description of methods of measurement and payment for the proposed improvements.

1.02 RELATED SECTIONS

A. General Conditions, Supplementary Conditions, Division 1, the technical sections and the Bid Proposal apply to this section.

PART 2 PRODUCTS

Not Used

PART 3 EXECUTION

3.01 GENERAL

A. Payment shall be on the unit price or lump sum basis for furnishing and installing each item as herein specified.

B. The cost of all labor and materials required to complete this project as specified herein or as shown on the Drawings, but not specifically included in pay items, shall be merged with the various unit prices or lump sum prices bid. General contract costs such as administration, overhead profit, bond costs, insurance, clean-up, surveying, etc. shall be merged into the unit prices or lump sum prices bid.

C. When an item is indicated to be measured and paid for as a "**plan quantity**", the quantity indicated shall be the final quantity measured after being compacted in-place (or simply placed) for which payment will be made, unless the planned dimensions of that work are revised by the ENGINEER, or unless subsequent recomputation of the quantity based upon plan dimensions shows the plan quantity to be incorrect.

D. The unit prices provided on the Proposal Form included in these specifications shall be used to adjust the corresponding lump sum prices listed on the same Proposal Form to compensate for modifications to work indicated by revisions to the contract documents. These unit prices will also be used for additions to or deletions from the corresponding lump sum price unless otherwise stated. Each unit adjustment price shall include all costs for furnishing and installing the unit complete and shall apply only to the specific material designated.

3.02 METHODS OF MEASUREMENT AND PAYMENT - BID ITEMS

A. Mobilization: Mobilization to include but not limited to: mobilization of equipment, coordination of installation of equipment and materials, preparation and submitting of submittals, coordination of system start-up and system adjustment and balancing, and preparation of Project Record Documents. Mobilization will be paid at the lump sum cost, with partial payments made as follows:

1. On the first partial payment estimate that shows work performed, 50 percent of the amount bid for mobilization shall be paid.

2. The remaining amount of mobilization shall be paid when at least 25 percent of the total contract value has been earned.

3. If mobilization exceeds five percent of the total contract amount, the OWNER reserves the right to withhold (on any partial payment estimate) the portion in excess of five percent of the total contract amount until 95 percent or more of the original contract amount is earned.

B. Rough Grading: Rough grading will be paid at the contract lump sum price and in general includes: site clearing, excavation, loading, hauling from borrow area, removal and stockpile of any existing topsoil, grading, contouring of stockpile areas, and contouring over the construction area in preparation for sub-cut excavation and berm construction. General fill is available at no cost from the on-site borrow source as designated by the OWNER. Any additional general fill required to complete the project shall be provided by the CONTRACTOR.

C. Sub-Cut Excavation: Sub-Cut Excavation will be paid at the contract unit price per cubic yard for plan quantity constructed and approved. The unit price shall include excavation, loading, hauling to stockpile area, material separation, and contouring over the construction area in preparation for sub-base construction.

D. Fabric Placement: Fabric Placement will be paid at the contract unit price per square foot for plan quantity constructed and approved. The unit price shall include furnishing, installing, testing and warranty requirements. Measurement for payment will be made at the inside edge of the geotextile anchor trench. Price will also include incidental costs associated with the installation of the geotextile, including receipt and storage of the geotextile material, maintenance of the subgrade prior to geotextile installation, excavation and backfilling of the anchor trenches, and all other general CONTRACTOR costs associated with the geotextile installation and repair.

E. Sub-base Construction: Sub-base Construction will be paid at the contract unit price per cubic yard compacted-in-place for plan quantity constructed and approved. The unit price shall include all costs associated with furnishing and installing material to specified requirements, which includes, but is not limited to: loading and hauling material from on-site stockpiles, grading and contouring over the construction area, and compacting subgrade to specified requirements in preparation for placement of liner systems. Fill material is available at no cost from the on-site stockpiles as designated by the OWNER. OWNER does not insure on-site materials will meet material specifications. Any

additional general fill required to complete the project shall be provided by the CONTRACTOR.

F. Clay Liner Material: Clay Liner Material will be paid at the contract unit price per cubic yard compacted-in-place for plan quantity constructed and approved. The unit price of clay liner construction shall include all costs associated with furnishing and installing material to specified requirements, which includes but is not limited to: material pre-qualification, excavation, loading, hauling from off-site borrow area, placement and compaction of clay liner material. No direct compensation will be made for water used in conjunction with compacting operations. Measurement for payment will be made at the inside edge of the geomembrane anchor trench, break-in grade location under transition berm, and the tie-in seam. Location of an off-site borrow source shall be the CONTRACTOR's responsibility.

G. 60-mil HDPE Liner: The 60-mil HDPE geomembrane liner to be installed on the closure area will be paid for at the contract unit price per square foot for plan quantity installed and approved. All liner materials are to be supplied and installed by the geomembrane liner installer, including but not limited to the liner in the lysimeter, pipe boots, base liner, transition berm flap, and rub sheets. There is no allowance included in the plan quantity for slope, anchor trench, rub sheets, transition berm flap, leak detection liner (lysimeter), penetrations, repairs, or wastage. Therefore, Contractor shall work with the geomembrane liner supplier to account for these extra materials in the bid. Contract unit price to include furnishing, installing, testing and warranty requirements. Measurement for payment will be made at the inside edge of the geomembrane anchor trench, the tie-in seam, and break-in grade location under transition berm. Price will also include incidental costs associated with the installation of the geomembrane, including receipt and storage of the geomembrane material, maintenance of the clay liner prior to geomembrane liner installers arrival on site, excavation and backfilling of the anchor trenches, and all other general CONTRACTOR costs associated with the geomembrane installation and repair.

H. Granular Drainage Layer (washed sand): Granular drainage layer material (washed sand) will be paid at the contract unit price per cubic yard in-place for plan quantity constructed and approved. The unit price shall include all labor, materials, and equipment necessary to haul OWNER supplied material and install the granular drainage layer to the specified requirements, including but not limited to: loading and hauling the material from the OWNER's off-site borrow area, placement of material, and constructing the drainage layer. Measurement for payment will be made at the inside edge of the geomembrane anchor trench, the tie-in seam, and transition berm. Location of the offsite source is Seppi Brothers Jammer Lake Pit, nine miles north of Virginia on Hwy 53.

I. Leachate Collection Piping: The leachate collection piping will be paid at the contract price per lineal foot of 6-inch pipe, including all costs for furnishing and installing. In general, the leachate collection pipe includes: solid and perforated 6-inch piping, pipe clean outs, completion of all proper connections, testing and repairs. Included to this item are the 18-inch riser pipes in the sump.

J. Coarse Aggregate: The coarse aggregate will be paid at the contract price per cubic yard,

including all costs for furnishing and installing. In general, the coarse aggregate includes: material pre-qualification, excavation, loading, hauling from off-site borrow area and placement of coarse aggregate material in the collection trenches.

K. Intermediate Aggregate: The intermediate aggregate will be paid at the contract price per cubic yard, including all costs for furnishing and installing. In general, the intermediate aggregate includes: material pre-qualification, excavation, loading, hauling from off-site borrow area and placement of intermediate aggregate material in the collection trenches.

L. Leachate Collection Trench Fabric: Filter fabric will be paid at the contract unit price per square foot for plan quantity constructed and approved. The unit price shall include furnishing, installing, testing and warranty requirements. Price will also include incidental costs associated with the installation of the filter fabric, including receipt and storage of the material, maintenance of the subgrade prior to filter fabric installation, and all other general CONTRACTOR costs associated with the filter fabric installation and repair.

M. Landfill Lysimeter: The landfill Lysimeter will be paid at the contract lump sum price, including all costs for furnishing and installing as shown on the Drawings. In general, the work includes construction of the Lysimeter sump, which includes coordination with the liner installer for materials and installation of HDPE liner and pipe boot, along with furnishing and installing the filter fabric, washed sand, aggregate, and leak detection piping.

N. Leachate Transmission System: The leachate collection system will be paid at the contract lump sum price, including all costs for furnishing and installing. In general , the leachate collection system includes: piping, collection trenches (including geotextile fabric, coarse and intermediate aggregate) in the collection sump, sump pump and level controls, side-slope risers, pump access vault, vault accessories (vent, heater, insulation, etc.), pipe clean outs, trenching, backfill materials, earthwork, filter fabric, manhole with associated valves and cleanouts, and connection to transmission piping.

O. Transition Berms: The transition berm will be paid at the contract lump sum price, including all costs for furnishing and installing as shown on the Drawings. In general the work includes: excavation, loading, hauling, placement of material to specified requirements, and insulation board in conjunction with HDPE liner installation.

P. Perimeter Berm: The perimeter berms, including access road subbase, will be paid at the contract lump sum price, including all costs for furnishing and installing as shown on the Drawings. In general the work includes: excavation, loading, hauling, placement and compaction of material to specified requirements.

Q. Leachate Line Flushing: Leachate Line Flushing will be paid at the contract lump sum price, including all costs for labor and materials necessary to flush the newly constructed leachate collection lines.

R. Miscellaneous Site Work: Miscellaneous site work will be paid at the contract lump sum price and in general includes: culvert, riprap, temporary erosion control, placement of topsoil, revegetation of disturbed areas, access roads, restoring haul roads to original

condition, coordination and set-up for leak detection testing, and site clean-up.

S. Electrical: Electrical will be paid at the contract lump sum price, including all costs for furnishing and installing. In general, the electrical includes: extension from existing electrical system, extension feeders to the leachate pump control panel, one leachate sump control panel, interlocks, wiring of the pump and controls to the control panel, connecting heater in vault, and start-up and testing of the system.

T. Surveying: Surveying will be paid at the contract lump sum price as paid by the OWNER as an Allowance for surveying performed by the OWNER's chosen surveyor. Re-surveying required because of non-conformance to specified requirements shall be performed by the OWNER's chosen surveyor at the expense of the CONTRACTOR and at no additional cost to the OWNER. No additional compensation will be made to the CONTRACTOR for re-surveying.

U. Materials Testing: Materials Testing will be paid at the contract lump sum price as paid by the OWNER as an Allowance for materials testing services performed by the OWNER's chosen testing firm. Only in-place and on-site testing is included in the Allowance. The costs to perform the necessary material borrow source testing is excluded from the Allowance, and should be included in the cost of the materials. Retesting required because of non-conformance to specified requirements shall be performed by the OWNER's chosen testing firm at the expense of the CONTRACTOR and at no additional cost to the OWNER. No additional compensation will be made to the CONTRACTOR for re-testing.

V. Leak Detection Testing: Leak detection testing will be paid at contract lump sum price as paid by the OWNER as an Allowance for liner leak detection testing services performed by the OWNER's chosen leak detection firm. There will be no direct compensation for the CONTRACTOR's incidental costs associated with the coordination of this testing with the OWNER, the Landfill Operator, and the OWNER's chosen leak detection service. Additionally there is no direct compensation to the CONTRACTOR for the cost of any repairs necessary to the geomembrane that are identified during testing. No additional compensation will be made to the CONTRACTOR for geosynthetic repairs resulting from the leak detection testing.

END OF SECTION 01025

SECTION 01039

COORDINATION AND MEETINGS

PART 1 GENERAL

1.01 SECTION INCLUDES

A. Coordination.

B. Preconstruction conference.

C. Progress meetings.

1.02 RELATED SECTIONS

A. General Conditions, Supplementary Conditions.

B. Section 01050 - Field Engineering/Surveying.

1.03 COORDINATION

A. Coordinate scheduling, submittals, and Work of the various Sections of specifications to assure efficient and orderly sequence of installation of interdependent construction elements with provisions for accommodating items installed later.

B. As more fully set forth in the General Conditions, the CONTRACTOR shall be solely responsible for coordination of the Work. He shall supervise, direct and cooperate fully with Subcontractors, manufacturers, fabricators, suppliers, distributors, installers, testing agencies and others whose services, materials or equipment are required to ensure completion of the Work within the Contract Time.

C. As more fully set forth in the General Conditions, the CONTRACTOR shall cooperate with and coordinate his Work with the work of any other contractor, utility service company or OWNER's employees performing additional work related to the Project.

D. The CONTRACTOR shall not be responsible for damage done by contractors not under his jurisdiction.

E. The CONTRACTOR shall also coordinate his Work with the work of others to assure compliance with schedules.

F. The CONTRACTOR shall also coordinate their Work as to not interfere with daily landfill operations.

G. The CONTRACTOR shall attend and participate in project coordination or progress meetings and report on progress of the Work and compliance with schedules.

1.04 PRECONSTRUCTION CONFERENCE

A. ENGINEER will schedule a conference after Notice of Award and before construction is started at the site.

B. Attendance Required: OWNER, ENGINEER, and CONTRACTOR.

C. Agenda:

1. Execution of Owner-Contractor Agreement.

2. Submission of executed bonds and insurance certificates.

3. Distribution of Contract Documents.

4. Submission of list of Subcontractors, list of products, Schedule of Values, and construction schedule.

5. Designation of personnel representing the parties in Contract, and the ENGINEER.

6. Procedures and processing of field decisions, submittals, substitutions, applications for payments, Change Orders and Contract closeout procedures.

7. Scheduling.

8. Use of premises.

9. Security.

10. Housekeeping (site clean-up).

11. Field offices.

12. Utilization of site for storage, vehicle parking, access routes and other site requirements.

1.05 PROGRESS MEETINGS

A. Engineer will schedule and administer meetings throughout progress of the Work once a week.

B. ENGINEER will make arrangements for meetings, prepare agenda with copies for participants, preside at meetings, record minutes, and distribute copies within two days to participants and those affected by decisions made.

C. Attendance Required: Job superintendent, major Subcontractors and suppliers, OWNER, ENGINEER, as appropriate to agenda topics for each meeting.

D. Agenda:

1. Review minutes of previous meetings.

2. Review of Work progress.

3. Field observations, problems, and decisions.

4. Identification of problems which impede planned progress.

5. Review of submittals schedule and status of submittals.

6. Review of off-site fabrication and delivery schedules.

7. Maintenance of progress schedule.

8. Corrective measures to regain projected schedules.

9. Planned progress during succeeding work period.

10. Coordination of projected progress.

11. Maintenance of quality and work standards.

12. Effect of proposed changes on progress schedule and coordination.

13. Other business relating to Work.

1.06 JOB SITE ADMINISTRATION

A. All job site administration for the OWNER and the ENGINEER will be handled through Liesch Associates, Inc. All shop drawings and pay requests shall be submitted to that office: Liesch Associates, Inc., 13400 15th Avenue North, Plymouth, Minnesota 55441, attn: Jim Berkas, phone: (763) 489-3100 fax: (763) 489-3101.

PART 2 PRODUCTS

Not Used

PART 3 EXECUTION

Not Used

END OF SECTION 01039

SECTION 01050

FIELD ENGINEERING/SURVEYING

PART 1 GENERAL

1.01 CONTRACTOR RESPONSIBILITIES

A. The CONTRACTOR will provide all necessary stakes to locate all work to be performed under this contract.

B. The CONTRACTOR shall:

1. Provide at the site a competent field representative to execute the CONTRACTOR's construction methods.

2. Preserve all points, stakes, grade marks, monuments and benchmarks and in the case of willful or careless destruction, the CONTRACTOR will be charged with the resulting expense of re-staking and shall be responsible for any mistakes that may be caused by the unnecessary loss or disturbance of the construction stakes.

3. When requested by the ENGINEER, provide resources as necessary, including survey crew, for ENGINEER to check line and grade points placed by CONTRACTOR. Do no excavation or material placement until all cross-sectioning necessary for determining pay quantities has been completed and checked by the ENGINEER.

4. Provide record drawing topographic maps as required in Part 1.04.

1.02 CONTRACTOR'S FIELD REPRESENTATIVE

A. Employ and retain at the site of the work a field representative capable of performing tasks required of the CONTRACTOR. Tasks included are:

1. Provide surveying equipment required including transit, level, stakes and accessories.

2. Furnish lines and grades for construction.

3. Maintain field office files and drawings, record drawings, and coordinate services with subcontractors. Prepare layout and coordination drawings for construction operations.

4. Check the work for conflicts and interferences and immediately advise the ENGINEER of any discrepancies noted.

5. Cooperate with the ENGINEER in field inspections as required.

1.03 LAND SURVEYOR

A. Retain or employ a Registered Land Surveyor, acceptable to the OWNER, to review CONTRACTOR field survey notes and conduct topographic surveys and develop record drawing topographic maps as required in Part 1.04.

1. Acceptable Land Surveyor shall be No equivalents will be accepted.

B. The cost of the land surveyor shall be paid by the OWNER as an Allowance. No additional compensation will be made to the CONTRACTOR for re-surveying.

C. CONTRACTOR shall notify surveyor sufficiently in advance of operations to allow for assignment of personnel and scheduling.

1.04 TOPOGRAPHIC SURVEY AND AS-BUILT TOPOGRAPHIC MAPS

A. Before beginning with necessary construction staking, verify the information shown on the drawings, in relation to the established construction reference stakes, benchmarks, control points and property corners. Notify Engineer of any discrepancies.

B. Locate preserve and protect established construction reference stakes, benchmarks, control points and property corners.

C. Use coordinate system provided by the ENGINEER.

D. CONTRACTOR shall perform a topographic survey of the site using a 50 ft. x 50 ft. grid interval and at break points in elevation over the entire area to be constructed. The survey shall be referenced to the existing control points at the site.

E. The survey shall be performed and a record drawing map developed for each of the following:

1. Before any work is performed to establish baseline elevations, benchmark and baseline stakes.

2. Subcut, Subbase, Clay Liner, Sand Drainage Layer, Berms, Anchor Trenches and Backfill areas. All surveys of liner components shall be tied into the outside edge of the anchor trench. Survey beyond the outside edge of the anchor trench shall be tied into undisturbed areas surrounding the area of construction.

3. Leachate Collection Line

a. At a minimum, provide a record survey indicating the horizontal and vertical coordinate and elevation of all leachate lines.

b. Perforated leachate lines shall be surveyed on a 25-foot interval.

c. Solid leachate lines shall be survey on a minimum 50-foot interval and at all changes in direction, "Y", and "T" locations, and deviations from the plans.

4. Final survey to prepare record drawing map showing horizontal and vertical locations of new construction features after all work is finished, including piping, edges of cover system and future tie-in area, drainageway, grades, buried utilities, structures, berms and other related structures. The horizontal grid system and vertical control will be illustrated on the as-built map.

5. A record drawing of the geomembrane portion of the composite liner shall be prepared with panel numbers, seam numbers, destructive test locations, and patches due to repair of test locations and/or liner damage identified. Refer to Section 2905 of these specifications for more details on record drawing requirements.

F. A clear numbering/labeling system must be used to differentiate different units of construction (e.g. layers of subbase, clay liner, leachate collection system, road ways, electrical, etc.). A written explanation of this system must be submitted to the ENGINEER prior to construction.

G. The maps will be the basis for determining material quantities and in-place material thickness.

H. The surveys will be performed and maps will be developed and signed by JPJ Engineering, Inc.

I. CONTRACTOR shall provide a hard copy and computer disk (AutoCAD 2007 or earlier version) of each record drawing topographic map to ENGINEER within 48-hours of completion.

1.05 PROFILE AND TOPOGRAPHY SHOWN ON THE DRAWINGS

A. Contours or profiles of the ground are shown on the Drawings. These profiles and contours are reasonably correct, but are not guaranteed to be absolutely so, and together with any schedule of quantities are presented only as an approximation.

1.06 RECORDS

A. Maintain a complete, accurate log of control and survey work as it progresses. A log of major daily activities and weather conditions, including descriptions and explanations of delays and/or work stoppages, shall also be maintained.

1.07 SUBMITTALS

A. Submit name of Registered Land Surveyor to the ENGINEER.

B. On request of the ENGINEER, submit documentation to verify accuracy of construction.

C. When requested by the ENGINEER, submit certificate signed by Registered Land Surveyor certifying that elevations and locations of Work are in conformance with Contract Documents.

D. Submit final as-built drawing of construction. These as-built drawings shall include an accurate scale and horizontal and vertical reference point. They shall be submitted as a

hard copy and on computer disk (AutoCAD 2012 or earlier version) to ENGINEER within 48-hours of completion.

PART 2 PRODUCTS

Not used

PART 3 EXECUTION

3.01 PREPARATION

A. Investigate and verify the existence and location of site improvements, utilities, and other existing facilities.

B. Before construction, verify the location of invert elevations at points of connection of leachate lines, underground electrical services, pipe risers and geomembrane tie-ins.

END OF SECTION 01050

SECTION 01155

ON-SITE HEALTH AND SAFETY REQUIREMENTS

PART 1 GENERAL

1.01 SUMMARY

A. Section includes CONTRACTOR responsibility for on-site health and safety requirements throughout the project for personnel and/or subcontractors under CONTRACTOR's control.

B. Contractor shall obey all on-site traffic signs. If right-of-way is not posted, CONTRACTOR's vehicles and machinery shall yield to other traffic. CONTRACTOR shall not interfere with daily operations and activities occurring at the site during construction, except CONTRACTOR shall provide a full-time traffic director during relocation of overburden into designated stockpiles, if determined necessary by OWNER.

C. Construction activities at landfills or at other waste disposal sites may place CONTRACTOR's personnel, and personnel of SUBCONTRACTORS hired to perform work at site in potentially hazardous situations due to exposure to landfill refuse, leachate, and gases.

D. CONTRACTOR is responsible for implementation and enforcement of safe work practices including, but not limited to, personnel exposure to refuse, leachate, and gases; use of trenching, sheeting, and shoring; scaffolding; materials handling and drilling; operation of equipment; and overall safety of personnel during progress of work.

1.02 QUALITY ASSURANCE

A. Regulatory Requirements

1. Plan for and ensure personnel comply with basic provisions of OSHA Safety and Health Standards (29 CFR 1910) and General Construction Standards (29 CFR 1926) as appropriate.

2. Comply with applicable laws and regulations of any public body having jurisdiction for safety of persons or property.

1.03 OPERATIONS AND EQUIPMENT SAFETY

A. Responsible for initiating, maintaining, and supervising safety precautions and programs in connection with work. Take necessary precautions for safety of employees on project site and other persons and organizations who may be affected by project.

B. Duties and responsibilities for safety in connection with work shall continue until such time as OWNER has issued notice to CONTRACTOR that work is complete.

1.04 HEALTH AND SAFETY

A. Implement and enforce health and safety requirements and take necessary precautions and provide protection for the following:

1. Personnel and/or SUBCONTRACTORs working on or visiting project site that are working with or for the CONTRACTOR.

2. Work and materials or equipment to be incorporated in work area on-site or off-site.

3. Other property at or adjacent to project site.

4. Public exposed to job-related operations or potential release of toxic or hazardous materials.

B. Prepare site specific health and safety plan (HASP).

1. CONTRACTOR solely responsible for adequacy, preparation, monitoring, management, and enforcement of the HASP.

2. HASP to address, at a minimum, the following:

- Site description.
- Project activities and coordination.
- Hazard evaluation.
- On-site safety responsibilities.
- Work zones.
- Personnel training.
- Personal protective equipment (PPE)
- Emergency procedures, phone numbers, emergency vehicle routes, and nearest medical assistance.
- Site visitors.

1.05 OWNER'S RESPNSIBILITIES

A. When OWNER or OWNER REPRESENTATIVE is required to be present on project site to perform services, OWNER or OWNER's REPRESENTATIVE will comply with OWNER REPRESENTATIVE's safety plans, programs, and procedures.

B. OWNER REPRESENTATIVE may direct personnel under the direction of the OWNER REPRESENTATIVE to leave project site or implement additional safeguards if OWNER REPRESENTATIVE determines OWNER REPRESENTATIVE safety plans, programs, and procedures do not provide adequate protection. If taken, these actions will be in furtherance of OWNER's REPRESENTATIVE responsibility to personnel under his/her direction only, and OWNER's REPRESENTATIVE will not assume responsibility for protection of other persons or property affected by work.

C. If OWNER's REPRESENTATIVE observes situations which appear to have potential for immediate and serious injury to persons or property, OWNER's REPRESENTATIVE

may warn persons who appear to be affected by such situations. Such warning, if issued, shall be given based on general humanitarian concerns, and OWNER's REPRESENTATIVE will not, by issuance of any such warning, assume any responsibility to issue future warnings or any general responsibility for protection of persons or property affected by work. Upon notification by the OWNER's REPRESENTATIVE, CONTRACTOR shall assess situation and make necessary corrections.

1.06 SUBMITTALS

A. Submit copies of HASP to OWNER within seven (7) days after Notice to Proceed. Work shall not proceed until HASP has been reviewed and written authorization to proceed has been issued.

B. Submittal of CONTRACTOR's HASP to OWNER is to inform OWNER so they are aware of the CONTRACTOR's with HASP requirements during performance of their on-site responsibilities.

C. Submittal of CONTRACTOR's HASP shall neither impose on OWNER or relieve CONTRACTOR from full responsibility therefore.

PART 2 PRODUCTS

Not Used

PART 3 EXECUTION

Not Used

END OF SECTION 01155

SECTION 01330

SUBMITTALS

PART 1 GENERAL

1.01 SECTION INCLUDES

A. Submittal procedures.

B. Construction progress schedules.

C. Shop drawings.

D. Manufacturers' instructions.

E. Manufacturers' certificates.

1.02 RELATED SECTIONS

A. General Conditions, Supplementary Conditions.

1.03 SUBMITTAL PROCEDURES

A. Sequentially number the transmittals. Re-submittals will have original number with an alphabetic suffix.

B. Identify Project, CONTRACTOR, Subcontractor or supplier; pertinent Drawing sheet and detail number(s), and specification Section number, as appropriate.

C. Apply CONTRACTOR's stamp, signed or initialed, certifying that review, verification of Products required, field dimensions, adjacent construction Work, and coordination of information, is in accordance with the requirements of the Work and Contract Documents.

D. Schedule submittals to expedite the Project, and deliver to appropriate office of the ENGINEER. Coordinate submission of related items.

E. Identify variations from Contract Documents and Product or system limitations which may be detrimental to successful performance of the completed Work.

F. Provide space for CONTRACTOR and ENGINEER review stamps.

G. Revise and resubmit submittals as required, identify all changes made since previous submittal.

H. Distribute copies of reviewed submittals to concerned parties. Instruct parties to promptly report any inability to comply with provisions.

1.04 DETAILED COST SUBMITTAL

A. Upon request of the OWNER, CONSTRACTOR will submit a detailed cost breakdown of information supplied on the Proposal Form.

1.05 CONSTRUCTION PROGRESS SCHEDULES

A. Submit initial progress schedule in duplicate within 15 days after date established in Notice to Proceed for ENGINEER review.

B. Revise and resubmit as required.

C. Submit revised schedules with each Application for Payment, identifying changes since previous version.

D. Submit a horizontal bar chart with separate line for each section of Work, identifying first work day of each week.

1.06 SHOP DRAWINGS

A. Submit the number of opaque reproductions which CONTRACTOR requires, plus three copies which will be retained by ENGINEER.

1.07 MANUFACTURERS' INSTRUCTIONS

A. When specified in individual specification Sections, submit manufacturers' printed instructions for delivery, storage, assembly, installation, start-up, adjusting, and finishing, in quantities specified for Product Data.

B. Identify conflicts between manufacturers' instructions and Contract Documents.

1.08 MANUFACTURERS' CERTIFICATES

A. When specified in individual specification Sections, submit manufacturers' certificates to ENGINEER for review, in quantities specified for Product Data.

B. Indicate material or product conforms to or exceeds specified requirements. Submit supporting reference data, affidavits, and certifications as appropriate.

C. Certificates may be recent or previous test results on material or Product, but must be acceptable to ENGINEER.

PART 2 PRODUCTS

Not Used

PART 3 EXECUTION

Not Used

END OF SECTION 01330

SECTION 01400

QUALITY CONTROL

PART 1 GENERAL

1.01 SECTION INCLUDES

A. Quality assurance and control of installation.

B. References.

C. Inspection and testing laboratory services.

D. Manufacturers' field services and reports.

1.02 RELATED SECTIONS

A. Section 01300 - Submittals

B. Section 01600 - Material and Equipment.

1.03 QUALITY ASSURANCE AND CONTROL OF INSTALLATION

A. Monitor quality control over suppliers, manufacturers, products, services, site conditions, and workmanship to produce Work of specified quality.

B. Comply fully with manufacturers' instructions, including each step in sequence.

C. Should manufacturers' instructions conflict with Contract Documents, request clarification from ENGINEER before proceeding.

D. Comply with specified standards as a minimum quality for the Work except when more stringent tolerances, codes, or specified requirements indicate higher standards or more precise workmanship.

E. Perform work by persons qualified to produce workmanship of specified quality.

F. Secure products in place with positive anchorage devices designed and sized to withstand stresses, vibration, physical distortion or disfigurement.

1.04 REFERENCES

A. Conform to reference standard by date of issue current on date of Contract Documents.

B. Obtain copies of standards when required by Contract Documents.

C. Should specified reference standards conflict with Contract Documents, request clarification from ENGINEER before proceeding.

D. The contractual relationship of the parties to the Contract shall not be altered from the Contract Documents by mention or inference otherwise in any reference document.

1.05 SURVEY

A. The CONTRACTOR will employ and pay for services of JPJ Engineering, Inc. to perform specified surveying as described in these specifications, and will be paid by the OWNER as an Allowance.

1. CONTRACTOR to cooperate with surveyor to facilitate execution of required services.

2. Employment of surveyor, in no way, relieves CONTRACTOR of his obligation to perform Work of Contract.

B. CONTRACTOR shall notify surveyor sufficiently in advance of operations to allow for assignment of personnel and scheduling.

1. When surveying cannot be performed after such notice, reimburse surveyor for personnel and travel expenses incurred.

C. Re-surveying required because of non-conformance to specified requirements shall be performed by JPJ Engineering, Inc. on instructions by the ENGINEER, at the expense of the CONTRACTOR and at no additional cost to the OWNER.

1.06 INSPECTION AND TESTING LABORATORY SERVICES

A. The CONTRACTOR will employ and pay for services of Northeast Technical Services to perform specified on-site testing as described in these specifications, and will be paid by the OWNER as an allowance. Only in-place and on-site testing are included in allowances. The necessary material borrow source testing is excluded from the allowance.

1. CONTRACTOR to cooperate with laboratory to facilitate execution of required services.

2. Employment of laboratory, in no way, relieves CONTRACTOR of his obligation to perform Work of Contract.

3. CONTRACTOR to provide laboratory material borrow source testing results and preliminary design mix proposed to be used for material mixes which required control by testing laboratory.

4. CONTRACTOR to furnish incidental labor and facilities.

a. Provide access to work to be tested.

b. Obtain and handle samples at project site or at source of product to be tested.

c. Facilitate inspections and tests.

d. Store and cure test samples.

B. Northeast Technical Services will perform all in-place and on-site inspections, tests, and other services specified in individual specification sections.

C. CONTRACTOR to furnish, at no additional cost, tests performed on-site and off-site and certifications of materials and equipment as specified. Reports shall indicate observations and results of tests and indicating compliance or non-compliance with these Specifications.

D. CONTRACTOR shall be responsible for all material source testing. It is not included in allowances. Material source testing shall be included in the unit price cost for the work. No additional compensation will be made to the CONTRACTOR for testing.

E. CONTRACTOR shall notify laboratory sufficiently in advance of operations to allow for laboratory assignment of personnel and scheduling of tests.

1. When tests or inspections cannot be performed after such notice, reimburse laboratory for personnel and travel expenses incurred.

F. Retesting required because of non-conformance to specified requirements shall be performed by the Northeast Technical Services on instructions by the ENGINEER, at the expense of the CONTRACTOR and at no additional cost to the OWNER.

G. The CONTRACTOR will be contracting with an independent leak detection testing service. Any and all repairs deemed necessary to the FML as a result of leak detection testing, shall be made in accordance with these Specifications by the CONTRACTOR's liner installer. The ENGINEER will be made a determination as to responsibility of each repair necessary, as identified by the leak detection service. General, costs for material defects and repairs necessary due to installation will be the responsibility of the CONTRACTOR's liner installer. Costs for repairs necessary due to soil materials (i.e. sharp rocks), placement of the sand drainage layer, or heavy equipment, will be the responsibility of the CONTRACTOR. All leaks detected by the leak detection service will be repaired by the CONTRACTOR's liner installer at no cost to the OWNER.

1.07 MANUFACTURERS' FIELD SERVICES AND REPORTS

A. When specified in individual specification Sections, require material or product suppliers or manufacturers to provide qualified staff personnel to observe site conditions, conditions of surfaces and installation, quality of workmanship, start-up of equipment, test, adjust, and balance of equipment and as applicable, and to initiate instructions when necessary.

B. Individuals to report observations and site decisions or instructions given to applicators or installers that are supplemental or contrary to manufacturers' written instructions.

C. Submit report within 14 days of observation to ENGINEER for review.

PART 2 PRODUCTS

Not Used

PART 3 EXECUTION

Not Used

END OF SECTION 01400

SECTION 01500

CONSTRUCTION FACILITIES AND TEMPORARY CONTROLS

PART 1 GENERAL

1.01 SECTION INCLUDES

A. Temporary Utilities: Electricity, water, heat, telephone, and sanitary facilities.

B. Temporary Controls: Barriers, protection of the Work, and water control.

C. Support facilities: Field offices, storage areas, temporary signs, and other construction aids and miscellaneous services and facilities.

D. Construction Facilities: Dust Control, Stormwater Control, Pollution.

1.02 REFERENCES

A. *Guidance for Erosion and Sedimentation Control Planning and Implementation,* Manual EPA-72-015.

B. *Processes, Procedures, and Method to Control Pollution Resulting from all Construction Activity*, Manual EPA 43019-73-007.

C. Minnesota Pollution Control Agency's National Pollutant Discharge Elimination System permit program.

D. General Conditions, Supplementary Conditions.

E. Minnesota Department of Transportation (Mn/DOT) Standard Specifications for Construction, 2000 Edition.

F. Section 02935 - Finish Site Work.

1.03 TEMPORARY FIELD OFFICE

A. During the terms of this contract, the CONTRACTOR shall furnish, install and maintain a field office. The office shall be located on a site approved by the OWNER and ENGINEER and at a location conveniently accessible to the project. The field office shall be watertight and insulated and be provided with telephone service, electric light and power.

B. The field office shall have a desk or work area available for use by the ENGINEER and Northeast Technical Services, along with a table for use in examining maps and plans, a waste basket, and two chairs.

C. The field office shall be considered incidental and no direct payment shall be made therefore.

1.04 TEMPORARY ELECTRICITY

A. The CONTRACTOR shall provide electric power service as required for the work. CONTRACTOR shall provide and utilize portable power generators, if required. CONTRACTOR will be responsible for any power costs.

1.05 TEMPORARY WATER SERVICE

A. Provide, maintain and pay for suitable quality water service required for construction operations.

B. The CONTRACTOR will provide and maintain an adequate supply of potable water for domestic consumption by CONTRACTOR personnel.

1.06 TEMPORARY SANITARY FACILITIES

A. The CONTRACTOR, at their expense, shall provide and maintain adequate sanitary facilities and enclosures for the use by those employed on the project.

B. Such sanitary facilities shall comply with all applicable state and local regulations. The facilities shall be made available when the first employees arrive on the site and shall be removed only after the departure of the last employee from the job.

1.07 BARRIERS

A. Maintain existing fence and gates to prevent unauthorized entry onto construction and landfill site. Assure gate is closed and locked at end of each day.

1.08 STORMWATER

A. ENGINEER will be applying for coverage by the MPCA's NPDES/SDS Storm Water Permit for Construction Activity. ENGINEER will also be preparing a Storm Water Pollution Prevention Plan. CONTRACTOR will receive a copy of the Storm Water Pollution Prevention Plan, and will operate under the conditions outlined within the plan.

1.09 WATER CONTROL

A. Grade site to drain. Maintain excavations free of water. Provide, operate, and maintain pumping equipment.

B. Protect site from puddling or running water. Provide water barriers as required to protect site from soil erosion.

C. Grade and execute construction by methods to control surface drainage from excavations. Prevent erosion and sedimentation from leaving construction site. Periodically inspect earthwork to detect evidence of erosion and sedimentation; promptly apply corrective measures.

D. Conform with Storm Water Pollution Prevention Plan in compliance with Minnesota Pollution Control Agency Storm Water Regulations for Construction.

1.10 PROTECTION OF INSTALLED WORK

A. Provide protection for plant life designated to remain. Replace damaged plant life. Repair wheel ruts and place topsoil on and reseed all disturbed areas.

B. Protect installed Work and provide special protection where specified in individual specification Sections.

C. Provide temporary and removable protection for installed Products. Control activity in immediate work area to minimize damage.

D. Protect all installed work and existing areas from erosion throughout construction.

1.11 ACCESS ROADS

A. Damage to access roads by construction traffic will be the responsibility of the CONTRACTOR. CONTRACTOR shall repair all access roads damaged by construction traffic to the specifications for access road construction included Section 02935.

B. **Waste haul trucks will be operating throughout the construction period. Neither the CONTRACTOR nor the subcontractors shall obstruct or delay the haul operations.**

C. Utilities (electrical and leachate) that run along the east-side of Landfill may need to be protected from large sized equipment (i.e. hauling trucks). This should be accomplished by building up haul roads in the area of these utilities.

1.12 DUST CONTROL

A. Due to close geographic location of Project to other off-site facilities, and the daily traffic load into and out of the existing landfill, take special care in providing and maintaining temporary roadways, OWNER's existing roads, haul roads, and public roads used for construction operation in clean, dust-free conditions during construction operations.

B. The CONTRACTOR shall provide adequate dust control at the project site, such that allowable local and state dust levels are not exceeded. CONTRACTOR to work under the direction of the OWNER and/or landfill operator on a daily basis to determine need for dust control. Dust control to be provided at CONTRACTOR's expense.

C. CONTRACTOR will maintain dust control equipment on-site.

1.13 PROTECTION OF WATERWAYS

A. Observe rules and regulations of State of Minnesota and agencies of U.S. Government prohibiting pollution of any lake, stream, river or wetland by dumping.

B. Provide approved methods which will divert flows, including storm flows and flows created by construction activity, to prevent excessive silting of waterways or flooding damage to property.

1.14 EROSION AND SEDIMENT CONTROL

A. Provide erosion and sedimentation control.

B. Operate under the NPDES construction activity permit and prepared "Storm Water Pollution Prevention Plan".

1.15 DISPOSAL OF EXCESS EXCAVATED AND OTHER WASTE MATERIALS

A. Excess excavated soil material not required or suitable for backfill shall be stockpiled at OWNER designated location.

1. Unacceptable disposal sites, include, but are not limited to: Sites within wetland or critical habitat and sites where disposal will have detrimental effects on surface water or groundwater quality.

2. The CONTRACTOR shall be responsible for fuel or oil spills due to the construction activities for this project. CONTRACTOR will remove all contaminated soils from the site and comply with Minnesota regulations at no cost to the OWNER.

1.16 PROTECTION OF AIR QUALITY

A. Minimize air pollution by requiring use of properly operating combustion emission control devices on construction vehicles and equipment used by CONTRACTORs, and encouraging shutdown of motorized equipment not actually in use.

B. Trash burning not permitted on construction site.

1.17 NOISE CONTROL

A. Comply with state and applicable local ordinances with regard to noise control.

PART 2 PRODUCTS

Not Used

PART 3 EXECUTION

Not Used

END OF SECTION 01500

SECTION 01600

MATERIAL AND EQUIPMENT

PART 1 GENERAL

1.01 SECTION INCLUDES

A. Products.

B. Transportation and handling.

C. Storage and protection.

D. Product options.

E. Substitutions.

1.02 RELATED SECTIONS

A. General Conditions, Supplementary Conditions.

1.03 PRODUCTS

A. Products: Means new material, machinery, components, equipment, fixtures, and systems forming the Work. Does not include machinery and equipment used for preparation, fabrication, conveying and erection of the Work.

B. Provide interchangeable components of the same manufacturer, for similar components.

1.04 TRANSPORTATION AND HANDLING

A. Transport, deliver, store, and handle products in accordance with manufacturers' instructions.

B. Schedule delivery to minimize long-term storage at the site and to prevent overcrowding of construction spaces.

C. Promptly inspect shipments to assure that products comply with requirements, quantities are correct, and products are undamaged.

D. Provide equipment and personnel to handle products by methods to prevent soiling, disfigurement, or damage.

E. Provide responsible person to unload and inspect all deliveries. OWNER personnel will not accept or sign for deliveries of products to the site.

1.05 STORAGE AND PROTECTION

A. Store and protect products in accordance with manufacturers' instructions, with seals and labels intact and legible. Store sensitive products in weather-tight, climate controlled enclosures.

B. For exterior storage of fabricated products, place on sloped supports, above ground.

C. Provide off-site storage and protection when site does not permit on-site storage or protection.

D. Cover products subject to deterioration with impervious sheet covering. Provide ventilation to avoid condensation.

E. Store loose granular materials on solid flat surfaces in a well-drained area. Prevent mixing with foreign matter.

F. Provide equipment and personnel to store products by methods to prevent soiling, disfigurement, or damage.

G. Arrange storage of products to permit access for inspection. Periodically inspect to assure products are undamaged and are maintained under specified conditions.

PART 2 PRODUCTS

2.01 PRODUCT OPTIONS

A. Products specified by reference standards, naming one or more manufacturers with an "or equivalent" statement or by Description Only: Any product meeting those standards, manufacturers or description.

B. Product Specified by naming one or more manufacturers with a provision for Substitutions or by naming one or more manufacturers with an "or approved equivalent" statement. Submit a request for substitution for any manufacturer not named. Refer to Section 1.07 for substitution request.

2.02 SUBSTITUTIONS

A. Instructions to Bidders specify time restrictions for submitting requests for substitutions during the bidding period to requirements specified in this section. Substitutions will be considered after Contract Award only where the proposed substitution results in a cost savings to the OWNER without significantly affecting the service life, reliability, economy of operation, case of maintenance, and necessary standardized features.

B. Document each request with complete data substantiating compliance of proposed substitution with Contract Documents.

C. A request constitutes a representation that the Bidder:

1. Has investigated proposed product and determined that it meets or exceeds the

quality level of the specified product.

2. Will provide the same warranty for the Substitution as for the specified product.

3. Will coordinate installation and make changes to other Work which may be required for the Work to be complete with no additional cost to the OWNER.

4. Waives claims for additional costs or time extension which may subsequently become apparent.

D. Substitutions will not be considered when they are indicated or implied on shop drawing or product data submittals, without separate written request, or when acceptance will require revision to the Contract Documents.

E. Substitutions are not to be considered approved until written notification is received from the ENGINEER.

PART 3 EXECUTION

3.01 INSTALLATION OF PRODUCTS

A. Comply with manufacturer's instructions and recommendations for installation of products in the applications indicated. Anchor each product securely in place, accurately located and aligned with other Work.

END OF SECTION 01600

SECTION 01700

CONTRACT CLOSEOUT

PART 1 GENERAL

1.01 SECTION INCLUDES

A. Closeout procedures.

B. Adjusting.

C. Project record documents.

D. Operation and maintenance data.

E. Warranties.

1.02 RELATED SECTIONS

A. General Conditions, Supplementary Conditions.

1.03 CLOSEOUT PROCEDURES

A. Submit written certification that Contract Documents have been reviewed, Work has been inspected, and that Work is complete in accordance with Contract Documents and ready for ENGINEER's inspection.

B. Provide submittals to ENGINEER that are required by governing or other authorities.

C. Submit final Application for Payment identifying total adjusted Contract Sum, previous payments, and sum remaining due.

1.04 ADJUSTING

A. Adjust operating Products and equipment to ensure smooth and unhindered operation.

1.05 PROJECT RECORD DOCUMENTS

A. Maintain on site, one set of the following record documents; record actual revisions to the Work:

1. Contract Drawings.

2. Specifications.

3. Addenda.

4. Change Orders and other Modifications to the Contract.

5. Reviewed shop drawings, product data, and samples.

6. Survey data pertinent to Contractor's work.

7. Record drawing topographic maps are required under Section 01050.

B. Store Record Documents separate from documents used for construction.

C. Record information concurrent with construction progress.

D. Specifications: Legibly mark and record at each Product section description of actual Products installed, including the following:

1. Manufacturer's name and product model and number.

2. Product substitutions or alternates utilized.

3. Changes made by Addenda and Modifications.

E. Record Documents and Shop Drawings: Legibly mark each item to record actual construction including:

1. Measured horizontal and vertical locations of underground utilities and appurtenances, referenced to permanent surface improvements.

2. Field changes of dimension and detail.

3. Details not on original Contract Drawings.

F. Make documents available at all times for inspection by ENGINEER and OWNER.

G. Submit documents to ENGINEER with claim for final Application for Payment.

1.06 EXTENDED WARRANTIES

A. Provide duplicate notarized copies.

B. Execute and assemble documents from Subcontractors, suppliers, and manufacturers.

C. Submit prior to final Application for Payment.

D. For items of Work delayed beyond date of Substantial Completion, provide updated submittal within ten days after acceptance, listing date of acceptance as start of warranty period.

PART 2 PRODUCTS

Not used

END OF SECTION 01700

SECTION 02110

SITE CLEARING

PART 1 GENERAL

1.01 SECTION INCLUDES

A. Remove surface debris.

B. Clear site of plant life and grass.

C. Remove trees and shrubs.

D. Remove root system of trees and shrubs.

1.02 RELATED SECTIONS

A. Section 02211 - Rough Grading.

1.03 REGULATORY REQUIREMENTS

A. Conform to applicable code for disposal of debris.

PART 2 PRODUCTS

Not Used

PART 3 EXECUTION

3.01 PREPARATION

A. Verify that existing plant life and features designated to remain are tagged or identified.

3.02 PROTECTION

A. Protect utilities that remain from damage.

B. Protect trees, plant growth, and features designated to remain as final landscaping.

C. Protect bench marks from damage or displacement.

3.03 CLEARING

A. Clear areas required for access to site and execution of Work.

B. Remove trees and shrubs within marked areas and as shown on the plans. Remove stumps, root system to a depth of 36 inches below basegrade contours.

C. Clear undergrowth and deadwood without disturbing subsoil.

D. Clearing operations shall be completed in a manner so as to prevent obstruction of traffic and to protect all remaining trees, shrubs, and other vegetation from injury.

3.04 REMOVAL

A. Remove trees, stumps, and other debris from project area and dispose of on-site as directed by the OWNER.

END OF SECTION 02110

SECTION 02211

ROUGH GRADING

PART 1 GENERAL

1.01 SECTION INCLUDES

A. Removal of topsoil from excavated areas.

B. Cutting, filling and rough grading the site and Landfill cell.

C. Construction of transition berms.

1.02 RELATED SECTIONS

A. Section 02110 - Site Clearing.

B. Section 02300 – Sub-Cut and Subbase Construction

C. Section 02310 – Rock Excavation

D. Section 02900 - Clay Liner Construction.

E. Section 02935 – Finish Site Work.

1.03 REFERENCES

A. ASTM D698 - Test Methods for Moisture-Density Relations of Soils and Soil-Aggregate Mixtures, Using 5.5 lb (2.49 Kg) Hammer and 12 inch (304.8 mm) Drop.

B. ASTM D1556 - Test Method for Density of Soil in Place by the Sand-Cone Method.

C. ASTM D1557 – Test Methods for Moisture-Density Relations of Soils and Soil-Aggregate Mixtures Using 10-lb (4.54 kg) Rammer and 18 in. (457 mm) Drop.

D. ASTM D2216 – Laboratory Determination of Water (Moisture) Content of Soil, Rock, and Soil-Aggregate Mixtures

E. ASTM D2922 - Test Method for Density of Soil and Soil-Aggregate by Nuclear Method.

F. ASTM D3017 – Test for Moisture Content of Soil and Soil-Aggregate by Nuclear Method (Shallow Depth).

G. Mn/DOT "Standard Specification for Construction", 2000 Edition.

1.04 QUALITY ASSURANCE

A. Material installation testing requirements:

1. Determine maximum density and optimum moisture content for compaction.

2. Conduct field density tests.

PART 2 PRODUCTS

2.01 MATERIALS

A. Topsoil: Excavated material, graded, free of roots, rocks larger than 1 inch, subsoil, debris, and large weeds. Defined as the upper soil horizon consisting of mineral layers of maximum humus (organic) accumulation.

B. General fill to be obtained from the on-site borrow area as designated by the OWNER. The OWNER does not guarantee that material from the on-site borrow area will achieve general fill specifications.

C. General fill material shall be excavated material free of lumps larger than six inches, rocks larger than 6-inches, and debris. Common borrow shall not contain peat, muck, sod, roots or sharp objects. Common borrow materials shall be approved by OWNER and ENGINEER prior to beginning construction.

D. The CONTRACTOR is responsible for placement and compaction of accepted material to the specified compaction parameters.

PART 3 EXECUTION

3.01 EXAMINATION

A. Verify site conditions under provisions of Section 01039.

B. Verify that survey benchmark and intended elevations for the Work are as indicated.

C. Additional test borings and other exploratory operations may be made by CONTRACTOR at CONTRACTOR'S expense. CONTRACTOR shall make arrangements for additional soils investigation with the OWNER.

3.02 PREPARATION

A. Identify required lines, levels, contours, and datum.

B. Verify site conditions and the condition of haul roads.

C. Identify known underground, above ground, and aerial utilities. Stake and flag locations. Call Gopher State One Call.

D. Protect above and below grade utilities that are to remain.

E. Protect plant life, and other features remaining as a portion of final landscaping.

F. Protect bench marks from excavation equipment and vehicular traffic.

3.03 TOPSOIL EXCAVATION

A. Excavate topsoil from the Cell 6 Construction area to be re-landscaped or re-graded.

B. Stockpile in area designated by OWNER on site for future use as final topsoil. Keep topsoil separated from subsoils.

C. Do not excavate wet topsoil.

D. Stockpile topsoil to depth not exceeding 8 feet.

3.04 GENERAL FILL EXCAVATION

A. Maintain excavation slope to ensure a stable excavation and prevent caving.

B. Provide and maintain all equipment necessary to keep excavated areas free of all groundwater surface water, or precipitation.

1. Soils which become soft, yielding, or loses support due to inadequate dewatering efforts shall be dealt with as follows:

a. Excavate disturbed soil materials for their entire depth.

b. Replace excavated materials with an approved fill material.

C. Protect Excavation from freezing.

D. Excavated materials that are unusable for construction (e.g. waste materials) shall be stockpiled in the OWNER designated area as indicated on the plan sheets. It is the CONTRACTOR'S responsibility to grade and shape the final stockpile.

3.05 FILLING

A. Fill material shall be loaded from the on-site borrow areas and transported to the construction area, as appropriate.

B. Fill areas to contours and elevations with unfrozen materials.

C. Fill material shall be placed where shown on the Plans.

D. Materials shall be placed, graded and compacted in no greater than 1-foot lifts.

E. Grade stakes shall be placed and removed with each 1-foot lift applied. The location of grade stakes will be off-set from the location of grade stakes in the previous lift. This is required to prevent areas of lower compaction in the immediate vicinity of grade stakes from becoming continuous in subsequent lifts.

F. Compaction method and equipment shall be appropriate for soil material and slopes being constructed. At a minimum, equipment will have a vibrating sheepsfoot drum and be of a size to achieve compaction requirements.

G. Fill material shall be compacted to a minimum 95 percent of Standard Proctor Maximum Density (ASTM D698). Final compaction of the uppermost lift shall be completed with a smooth drum roller. Finished areas shall have a smooth and uniformly sloped surface to promote sheet flow drainage. Surface shall be within plus 0.0 or minus 0.2 foot tolerance of design grades at all locations.

H. Make grade changes gradual. Blend slope into level areas.

3.06 ROUGH AND FINAL GRADING

A. Uniformly grade areas within limits of grading under this section, including adjacent transition areas. Smooth finish surface to within specified tolerances, compact with uniform levels or slopes between points where elevations are shown, or between such points and existing grades.

1. Do not commence final grading until construction, fill, backfill and rough grading have been completed and approved.

2. Areas that have been finish graded shall be protected from subsequent construction operations, traffic and erosion. Repair all areas that have become rutted by traffic or eroded by water or have been settled below the correct grade.

3. All areas disturbed by the CONTRACTOR's operations shall be restored to equal or better than original condition or to the requirements of the work.

3.07 QUALITY CONTROL

A. The minimum frequency for field density testing of material used in berm construction shall be one test per 600 cubic yards of fill.

B. Fill shall be placed at 95 % of Standard Proctor Density.

C. All material placement testing will be performed by Northeast Technical Services, Inc. at the CONTRACTOR's expense as included in the Allowance. Additional testing may be ordered at the discretion of the ENGINEER.

D. Coordinate survey and testing with ENGINEER. Do no further excavation or material placement until all cross-sections or topographic survey necessary has been completed and checked by the ENGINEER.

E. Contours shall be verified by topographic survey along a grid pattern no greater than 50 x 50 ft and at all breaks in grade at the CONTRACTOR's expense as included in the Allowance.

F. If tests indicate Work does not meet specified requirements, remove Work, replace and retest at CONTRACTOR'S expense. All costs associated with the remedial work including retesting and resurveying costs shall be borne by the CONTRACTOR.

END OF SECTION 02211

SECTION 02300

SUB-CUT AND SUBBASE CONSTRUCTION

PART 1 GENERAL

1.01 SECTION INCLUDES

A. Excavation.

B. Testing rolling.

C. Filling and compacting.

D. Backfilling around structures.

E. Disposal of surplus materials.

F. Finish grading.

G. Road protection

1.02 RELATED SECTIONS

A. Section 02211 – Rough Grading

B. Section 2900 – Clay Liner Construction

1.03 REFERENCES

A. ASTM D698 - Test Methods for Moisture-Density Relations of Soils and Soil-Aggregate Mixtures, Using 5.5 lb (2.49 Kg) Hammer and 12 inch (304.8 mm) Drop.

B. ASTM D1556 - Test Method for Density of Soil in Place by the Sand-Cone Method.

C. ASTM D1557 – Test Methods for Moisture-Density Relations of Soils and Soil-Aggregate Mixtures Using 10-lb (4.54 kg) Rammer and 18 in. (457 mm) Drop.

D. ASTM D2216 – Laboratory Determination of Water (Moisture) Content of Soil, Rock, and Soil-Aggregate Mixtures

E. ASTM D2922 - Test Method for Density of Soil and Soil-Aggregate by Nuclear Method (Shallow Depth).

F. ASTM D3017 – Test for Moisture Content of Soil and Soil-Aggregate by Nuclear Method (Shallow Depth).

G. Mn/DOT "Standard Specification for Construction", 2000 Edition.

1.04 QUALITY ASSURANCE

A. Material testing requirements:

1. Installation testing

a. Determine maximum density and optimum moisture content for compaction.

b. Conduct field density tests.

PART 2 PRODUCTS

2.01 MATERIALS

A. Materials for use in the sub-base layer construction shall be as designated by OWNER, and consist of granular soil from on-site stockpiles with a maximum rock size of 6-inches. Material shall be free of muck, peat, roots or other organic debris.

B. The CONTRACTOR is responsible for placement and compaction of OWNER designated material to the specified compaction parameters.

C. Any areas not meeting the compaction standard shall be reworked at the CONTRACTOR's expense.

2.02 REINFORCEMENT GEOTEXTILE

A. Filter fabric to be used at base of sub-cut excavation as shown on the Drawings.

B. Geotextile shall be a woven geotextile for soil separation and stabilization, which meets or exceeds Mn/DOT Specification 3733, Geotextile. Geotextile shall be either Mirafi 600X, Amoco 2006, or approved equivalent.

PART 3 EXECUTION

3.01 EXAMINATION

A. Verify site conditions and condition of haul roads.

3.02 SUB-CUT EXCAVATION

A. Sub-cut excavation grades (bottom of 5-foot sub-cut) shall be within plus 0.0 and minus 0.2 feet tolerance of design grades.

1. Notify the OWNER's REPRESENTATIVE prior to proceeding with the removal of unsuitable material.

B. Excavated material shall be stockpiled on-site as directed by the OWNER or OWNER's REPRESENTATIVE and as shown on the Drawings.

C. Upon completion of excavation, regrade stockpile and borrow areas in an acceptable manner to facilitate proper site drainage.

D. Maintain excavation slope to ensure a stable excavation and prevent caving.

E. Provide and maintain all equipment necessary to keep excavated areas free of all groundwater surface water, or precipitation.

1. Soils which become soft, yielding, or loses support due to inadequate dewatering efforts shall be dealt with as follows:

a. Excavate disturbed soil materials for their entire depth.

b. Replace excavated materials with an approved fill material.

F. Protect Excavation from freezing.

3.03 REINFORCEMENT GEOTEXTILE PLACEMENT

A. Geotextile shall be installed throughout base of sub-cut excavation as indicated on the Drawings. The geotextile shall be placed over the prepared surfaces in such a manner as to assure minimum handling and that the geotextile is not damaged in any way.

B. If geotextile is damaged, damaged sections shall be patched with new material. Patches shall be overlapped a minimum of six inches.

3.04 SUBBASE LAYER CONSTRUCTION

A. The subbase layer material shall be loaded from the on-site borrow areas and transported to the construction area.

B. The subbase layer shall be constructed where shown on the Plans.

C. Material shall be placed, graded and compacted in no greater than eight-inch lifts (after compaction), for a total minimum thickness of 5-feet.

D. Grade stakes shall be placed and removed with each one-foot lift applied. The location of grade stakes will be offset from the location of grade stakes in the previous lift. This is required to prevent areas of lower compaction in the immediate vicinity of grade stakes from becoming continuous in subsequent lifts.

E. Compaction method shall be appropriate for soil material and provide sufficient soil contact pressure to thoroughly compact entire lift thickness.

F. The subbase material shall be compacted to a minimum 95 percent of Standard Proctor Maximum Density (ASTM D698). The finished subbase layer shall have a smooth and uniformly sloped surface to promote sheet flow drainage. Final compaction of the uppermost lift shall be completed with a smooth drum roller. Surface shall be within plus 0.0 or minus 0.2 foot tolerance of design grades at all locations.

G. Subbase layer shall be placed, graded and compacted to a five-foot minimum overall thickness.

3.05 DISPOSAL OF SURPLUS MATERIALS

A. Haul and dispose of all surplus materials.

B. Provide disposal area for surplus materials.

3.06 QUALITY CONTROL

A. All subbase testing will be performed by Northeast Technical Services at the CONTRACTORs expense as included in the Allowance. Additional testing may be ordered at the discretion of the ENGINEER.

B. The minimum frequency for field density testing of material used in berm construction shall be one test per 600 cubic yards of fill.

C. If material testing indicates that the specified requirements are not being met, the CONTRACTOR shall excavate, replace and recompact the nonconforming area. All costs associated with the remedial work including retesting costs shall be borne by the CONTRACTOR.

D. Soil testing shall be performed in accordance with proper ASTM standards.

E. The thickness of the subbase layer shall be verified by topographic survey along a grid pattern no greater than 50 ft x 50 ft at the CONTRACTOR's expense as included in the Allowance.

F. Any surveying costs associated with re-surveying due to non-conformance with the specifications shall be borne by the CONTRACTOR.

END OF SECTION 02300

SECTION 02310

ROCK EXCAVATION

PART 1 GENERAL

1.01 SECTION INCLUDES

A. Pre-blasting structure survey.

B. Rock excavation.

C. Rock disposal.

1.02 RELATED SECTIONS

A. Section 02211 – Rough Grading

B. Section 02300 – Sub-Cut and Subbase Construction

1.03 DEFINITIONS

A. Wherever "rock" is used in the Contract Documents, it shall have the following meaning: Material geologically in-place or as part of mine spoils and of a hardness or size that cannot be excavated and removed without the use of blasting or pneumatic tools. Rock shall also include rock boulders having a minimum volume of one cubic yard or if the boulder is within a utility trench then having a minimum volume of one-half cubic yard.

1.04 SUBMITTALS

A. Prior to blasting, submit the following to the Engineer:

1. One copy of blasting permits.

2. Structure survey including:

a. Written report.

b. Video tape of existing structure defects.

B. Prior to removal of rock boulder, identify boulders to OWNER's REPRESENTATIVE.

PART 2 PRODUCTS

Not Used

PART 3 EXECUTION

3.01 STRUCTURE SURVEY

A. Prior to blasting, conduct a survey of all structures that are within a minimum radius of 300 feet or within the destructive range of the rock blasting area as determine by a licensed blaster, whichever is greater.

B. Structures include, but are not limited to:

1. Buildings (interior and exterior)

2. Bridges

3. Walkways and retaining walls

4. Subsurface Structures.

5. Concrete and masonry structures.

C. Contractor shall arrange access to buildings, property, etc.

D. Survey shall include:

1. Video tape depicting all existing interior and exterior defects of structures.

2. Written report which provides a narration of the video tapes.

3.02 ROCK EXCAVATION

A. When rock is encountered, expose the top of the rock and allow ENGINEER to record the rock elevation before excavation and removal.

B. Rock excavated and removed for utility construction shall include:

1. Clearance limited for pipeline, fittings, and structures as follows:

a. Sides: Minimum 12 inches

b. Bottom: Minimum 6 inches

C. Blasting Requirements

1. Contractor shall adhere to the following:

a. Secure all required permits.

b. Blasting operations shall be supervised by a licensed blaster.

c. Provide suitable cover to prevent flying debris while blasting.

d. Conform to all applicable codes for blasting.

3.03 ROCK DISPOSAL

A. Contractor shall be responsible for disposal of rock and shall include:

1. Securing all required permits.

2. Loading and hauling.

3. Dumping and leveling.

4. Provide a site and method of disposal in conformance with all applicable governing authorities.

END OF SECTION 02310

SECTION 02900

CLAY LINER CONSTRUCTION

PART 1 GENERAL

1.01 SECTION INCLUDES

A. Construction of a 24-inch minimum thickness clay liner above the prepared subbase.

B. Work in this section also includes clay encasements for manholes and leachate transfer piping.

1.02 RELATED SECTIONS

A. Section 02211 - Rough Grading.

B. Section 02300 – Sub-Cut and Subbase Construction.

C. Section 02905 - Flexible Membrane Liner (FML) System.

D. Section 02915 - Granular Drainage Layer.

1.03 REFERENCES

A. ASTM D422 – Method for Particle-Size Analysis of Soils.

B. ASTM D698 - Test Methods for Moisture-Density Relations of Soils and Soil-Aggregate Mixtures, Using 5.5 lb (2.49 Kg) Hammer and 12 inch (304.8 mm) Drop.

C. ASTM D1140 – Standard Test Method for Amount of Material in Soils Finer than the No. 200 (75 um) Sieve.

D. ASTM D1556 - Test Method for Density of Soil in Place by the Sand-Cone Method.

E. ASTM D1557 – Test Methods for Moisture-Density Relations of Soils and Soil-Aggregate Mixtures Using 10-lb (4.54 kg) Rammer and 18 in. (457 mm) Drop.

F. ASTM D1587 – Standard Practice for Thin-Walled Sampling of Soils.

G. ASTM D2216 – Laboratory Determination of Water (Moisture) Content of Soil, Rock, and Soil-Aggregate Mixtures

H. ASTM 2434 – Standard Test Method for Permeability of Granular Soils (Constant Head)

I. ASTM D2487 – Standard Classification of Soils for Engineering Purposes.

J. ASTM D2488 – Standard Practice for Description and Identification of Soils (visual-manual procedure).

K. ASTM D2922 - Test Method for Density of Soil and Soil-Aggregate by Nuclear Method

(Shallow Depth).

L. ASTM D3017 – Test for Moisture Content of Soil and Soil-Aggregate by Nuclear Method (Shallow Depth).

M. ASTM D4318 – Standard Test Method for Liquid Limit, Plastic Limit, and Plasticity Index of Soils.

N. ASTM D5084 – Standard Test Method for Measurement of Hydraulic Conductivity of Saturated Porous Materials Using a Flexible Wall Permeameter.

O. Mn/DOT "Standard Specification for Construction", 2000 Edition.

1.04 TESTING RESPONSIBILITY

A. CONTRACTOR shall perform and pay for all testing including additional testing due to failure and change in material.

PART 2 PRODUCTS

2.01 MATERIALS

A. Specifications - Clay soil used by the CONTRACTOR for liner construction shall meet the following test/classification specifications:

Reference	**Specification**
ASTM D4318 – Atterberg Limits	Liquid Limit: $\geq$ 25% Plasticity Index: $\geq$ 12%
ASTM D422 – Particle Size Distribution	100% passing 3" sieve, min. 50% by weight passing #200 sieve, max. % gravel = 5%, max. rock size = 1" diameter, max. clod size = 3"
ASTM D2216 – Natural Moisture Content	0-5% above optimum
ASTM D698 – Moisture/Density Relationship **(5-point)**	95% Standard Proctor
ASTM D2434 – Soil Permeability	1×10^{-7} cm/sec
ASTM D2488 – Soils Description	CL, CH, SC if meets permeability and other criteria, no organic matter
ASTM D2487 – Soils Classification	CL, CH, SC if meets permeability and other criteria, no organic matter

B. The CONTRACTOR is required to locate an off-site source of suitable clay material for this project. Clay to be placed as liner material shall be tested to demonstrate compliance with material specifications as outlined in Part 3.04. The ENGINEER shall be provided with a document from an independent laboratory certifying that the clay soil borrow source meets the material specification described above.

Testing results shall be supplied to the ENGINEER two weeks prior to liner construction.

The CONTRACTOR shall bear the costs of clay soil sampling and testing required to meet the above specifications. Costs associated with the ENGINEER's inspection and approval shall be borne by the OWNER.

C. The OWNER or ENGINEER reserves the option to inspect and reject unsuitable materials.

D. The CONTRACTOR is responsible for placement and compaction of accepted material to the specified compaction parameters and specified permeability requirements.

E. Any areas not meeting the compaction or the permeability standard shall be reworked at the CONTRACTOR's expense.

PART 3 EXECUTION

3.01 EXAMINATION

A. Verify site conditions and condition of haul roads.

B. Subbase soil materials shall be compacted to 95% of Standard Proctor.

3.02 CLAY LINER CONSTRUCTION

A. Clay liner placement shall not proceed until subbase grading, testing and documentation has been completed.

B. Clay material shall be loaded from the borrow areas and transported to the landfill site.

C. Clay material shall be placed for liner construction where shown on the Drawings.

D. Material shall be placed, graded and compacted in no greater than eight-inch lifts (after compaction), for a total minimum thickness of 24 inches.

E. Grade stakes shall be placed and removed with each eight-inch lift applied, at locations other than where stakes were placed in the lift immediately preceding it. That is, the location of grade stakes will be offset from the location of grade stakes in the previous lift. This is required to prevent areas of lower compaction in the immediate vicinity of grade stakes from becoming continuous in subsequent lifts.

F. The water content of the clay material prior to and during placement shall be distributed uniformly throughout each layer. The allowable range of moisture content shall be between zero and five percent above the optimum moisture content as determined by ASTM D698. The CONTRACTOR shall adjust moisture content to achieve the allowable range and shall maintain optimum moisture content until placement of the flexible membrane liner.

G. The clay material shall be compacted to a minimum 95 percent of Standard Proctor Maximum Density (ASTM D698). The finished clay layer shall have a smooth and uniformly sloped surface to promote sheet flow drainage. Final compaction of the uppermost lift shall be completed with a smooth drum roller. Surface shall be within plus

0.2 or minus 0 foot tolerance of finished plan contours at all locations. Adjustments may be allowed, provided that grades are sufficiently developed to direct drainage toward the leachate collection piping.

H. The clay liner component of the composite liner system will be constructed in such a manner as to minimize the time between completion of the clay liner and placement of the 60-mil HDPE flexible membrane. The CONTRACTOR shall be responsible for maintaining optimum moisture in the completed clay liner (most importantly the exposed surfaces) prior to placement of the flexible membrane liner.

I. The CONTRACTOR shall be responsible for filling all grade stake holes in the clay liner with bentonite (powder or chips) before placement of flexible membrane liner.

J. The clay liner shall have a maximum permeability of 1×10^{-7} cm/sec for each lift placed.

3.03 CLAY LINER AROUND STRUCTURES

A. Place clay liner materials in the manner specified above as required around the following structures:

1. Leachate pipe cleanout lines.

2. Leachate pipe trenches.

3. Other areas shown on the plans.

3.04 DEWATERING

A. The CONTRACTOR shall take all steps necessary, such as ditching, diking, and pumping to keep the excavation areas clear of water/leachate during the progress of the work and until the finished work is safe from damage. The CONTRACTOR shall provide all power, pumps, materials, and miscellaneous apparatus necessary, and shall be responsible for disposing of the water/leachate pumped from the excavation in a manner which will not interfere with other Work within the area or cause damage to property. The CONTRACTOR shall be held responsible for all erosion, sediment deposit, or other adverse results because of the dewatering operations and shall repair any areas affected at no additional cost the OWNER.

1. CONTRACTOR shall note that leachate may not be discharged to surface water or directly onto ground surface. Leachate must be managed in accordance the Landfill's *Leachate Management Plan* (i.e. pumped into leachate management system or back into a lined landfill cell).

3.05 FIELD QUALITY CONTROL

A. Clay Source Testing

1. The following testing procedures will be performed for verification of off-site borrow source (per source):

Description	Method	Frequency	Specification
Atterberg Limits	ASTM D4318	1 test/3,000 c.y.	Liquid Limit: ≥ 25% Plasticity Index: ≥ 12%
Particle Size Distribution	ASTM D422	1 test/3,000 c.y.	100% Passing 3" sieve, 50% (W/W) Passing #200 sieve, max. % gravel = 5%, max. rock size = 1" diameter, max. clod size = 3"
Water Content	ASTM D2216 or D3017	1 test/3,000 c.y.	Optimum moisture content
Density	ASTM D698 or D1557 **(5-point)**	1 test/3,000 c.y.	Maximum density
Soil Permeability	ASTM D5084, EPA 9100	1 test/5,000 c.y.	1×10^{-7} cm/sec (95% recompacted)
Soil Classification	ASTM D2487	1 test/3,000 c.y.	CL, CH, SC if soil meets permeability and other criteria, No organic matter

2. Testing of off-site clay soils shall be conducted by an independent laboratory. Test results shall be supplied to the OWNER and ENGINEER. Costs associated with this testing shall be borne by the CONTRACTOR.

B. Construction

1. All soils testing shall be performed in accordance with applicable ASTM standards. The method, frequency, and minimum requirements for testing are summarized in the following table.

Description	Method	Frequency	Specification
Compaction/ Nuclear Density	ASTM D2922 and D1556 or D3017	1 test/ 10,000 sf/ 8-inch lift; off-set each lift	Minimum 95% standard proctor
Water Content	ASTM D2216 - Nuclear Method	1 test/10,000 sf/ 8-inch lift; off-set each lift	0-5% above optimum
Thickness	Survey	50 ft. grid	Minus zero to plus 0.2-feet
Permeability	ASTM D5084 EPA 9100	1 test/acre/ft	Less than 1×10^{-7} cm/sec

2. Moisture tests and density tests will be performed by Northeast Technical Services (at the CONTRACTOR's expense) on each lift, at locations chosen by the ENGINEER but at a minimum of one test per 100 ft. grid per lift (1 test/10,000 s.f./8-inch lift). A minimum density of 95 percent of the maximum density and zero to five percent above the optimum moisture content of the Standard Proctor Test (ASTM D698) will be required. Additional testing can be ordered at the discretion of the ENGINEER.

   If clay material testing indicates that the compaction or moisture requirements are not being met, the CONTRACTOR shall excavate, scarify, adjust moisture, and recompact the nonconforming area. All costs associated with the remedial work, including retesting costs, shall be borne by the CONTRACTOR.

3. One permeability test (ASTM D5084) per twelve-inch-lift thickness of clay liner shall be performed on a 200 foot grid at locations chosen by the ENGINEER. Testing will be performed under the direction of the ENGINEER and at the CONTRACTOR's expense. CONTRACTOR shall cooperate with ENGINEER in performing permeability testing.

   If clay material testing indicates that the permeability requirements are not being met, the CONTRACTOR shall excavate, scarify, adjust moisture, and recompact the nonconforming area. All costs associated with the remedial work, including retesting costs, shall be borne by the CONTRACTOR.

4. Surface shall be within plus 0.2 or minus 0 foot tolerance of finished plan contours at all locations. Clay liner thickness shall be verified at the CONTRACTOR's expense. The verification will consist of a topographic survey performed by a Registered Land surveyor, as required in Section 01050, of the top of subgrade elevation and the top of completed clay liner elevation conducted on a grid pattern not greater than 50 feet by 50 feet. All field notes will be provided with the verification.

   Any areas showing less than the specified thickness of liner material shall be remediated, including additional testing and surveying as required to meet the thickness specification, at the CONTRACTOR's expense.

5. The CONTRACTOR shall obtain the approval of the ENGINEER for the minimum layer thickness before beginning the placement of subsequent layers.

END OF SECTION 02900

SECTION 02905

FLEXIBLE MEMBRANE LINER

PART 1 GENERAL

1.01 SECTION INCLUDES

A. The work covered under this section of the specifications shall include the furnishing of all material, labor, tools, equipment, tests and services necessary to install the smooth and textured 60-mil high density polyethylene (HDPE) flexible membrane liner (FML) as shown on the Drawings and in accordance with the specification. Smooth FML will be placed on base of cell and textured FML will be placed on the eastern sideslope and the transition berm flap, as shown on the Drawings. This section includes CONTRACTOR's construction of the liner anchor trenches as shown on the drawings.

B. The OWNER has made an Allowance for the CONTRACTOR to provide independent leak detection testing. Any and all repairs deemed necessary to the FML as a result of leak detection testing, shall be made in accordance with these Specifications by the liner installer and paid for by the CONTRACTOR. No additional costs for geosynthetic repairs resulting from the leak detection testing will be borne by the OWNER.

1.02 RELATED SECTIONS

A. Section 02211 - Rough Grading.

B. Section 02900 - Clay Liner Construction.

C. Section 02910 - Leachate Collection and Detection System.

D. Section 02915 - Granular Drainage Layer.

1.03 REFERENCES

A. Geosynthetic Research Institute (GRI) – GM 12.

B. GRI – GM 13.

C. GRI – GM 19.

D. ASTM D6392 - Practice for Determining the Integrity of Field Seams Used in Joining Flexible Polymeric Sheet Geomembranes.

E. ASTM D6693 – Standard Test Method for Tensile Properties of Plastics.

1.04 SUBMITTALS

A. The CONTRACTOR shall submit the following:

1. With the Proposal

a. Name of the proposed manufacturer and Installer of HDPE flexible membrane.

b. Itemization of any exceptions to the plans and specifications.

2. After contract award, before construction;

a. Certified test reports done by an independent testing laboratory on the geomembrane to be installed which indicate compliance with GRI – GM12, GM 13 and GM 19 and these specifications.

b. Proposed seaming methods and details of the flexible membrane sheet layout showing proposed flexible membrane sheet dimensions, identification numbers, and location of all field welds and/or seams.

c. A submittal from the FML Installation Contractor outlining procedures for approval of subgrade preparation prior to installation of the flexible membrane liner.

d. A letter from the flexible membrane manufacturer that states:

- the manufacturer has reviewed and approved the specifications for the base preparation upon which the flexible membrane cap is to be installed.
- the INSTALLATION CONTRACTOR of the flexible membrane has completed at least three similar jobs with installation of equal or greater square footage. A resume shall be included with the letter.

e. Identification of the contact person at the OWNER designated independent laboratory that will perform the sheer and peel test results for the ENGINEER.

f. Copies of the warranties and bonds for preliminary approval by the ENGINEER.

g. Shop drawings of Flexible Membrane Liner and anchor trenches.

3. To be supplied with the FML material:

a. The origin (resin suppliers name, resin production plant), identification (brand name, number) and production date of the resin.

b. A copy of the quality control certificates issued by the resin supplier noting results of the density and melt index.

c. Reports on the test conducted to verify the quality of the resin used to manufacture the geomembrane rolls supplied including specific gravity and melt index.

d. Laboratory test results and certification stating that all geomembrane rolls are furnished by one supplier, and that all rolls are manufactured from one resin type obtained from one resin supplier.

4. Upon Completion of leak detection testing:

   a. A report from the leak detection testing firm detailing the testing performed, description and location of leaks detected.

5. Upon completion of the FML installation:

   a. A letter from the INSTALLATION CONTRACTOR stating that the flexible membrane liner was installed in accordance with the manufacturer's specifications and the manufacturer's instructions.

   b. A "Field Seam Sampling and Testing Report," including all information described in Part 4.

   c. All material and installation warranty submittals as defined in Section 1.05.

1.05 WARRANTY

A. Material Warranty

1. The Manufacturer shall furnish the OWNER with the manufacturer's written warranty against manufacturing defects and material degradation of the flexible membrane for a period of 20 years from the date of Official Acceptance by the OWNER.

2. Flexible membrane to be warranted against the affects of municipal solid waste leachate.

B. Installation Warranty

1. The INSTALLATION CONTRACTOR shall warrant the installation of the flexible membrane liner against defects for a period of two (2) years from the date of Official Acceptance by the OWNER.

2. The INSTALLATION CONTRACTOR, or their designated representative, shall repair any defects due to improper installation which occur during the warranty period at no cost to the OWNER. This includes results of the leak detection testing.

3. The INSTALLATION CONTRACTOR shall furnish the OWNER with a written warranty covering the above requirements.

1.06 DELIVERY, STORAGE AND HANDLING

A. Deliver, store, protect and handle products to site under the following provisions and Section 01600.

B. Store geosynthetic rolls on a prepared surface (not on wooden pallets) in the space allocated by the OWNER. Protect rolls from puncture, dirt, grease, water, moisture, mud, mechanical abrasions, excessive heat or other damage. Stack geosynthetic rolls no more than three rolls high.

C. Use appropriate handling equipment to load, move, or deploy geosynthetic rolls. Appropriate handling equipment includes cloth chokers and spreader bar for loading, spreader, and roll bars for deployment. Dragging panels on ground surface will not be permitted.

D. Do not fold geosynthetic materials; folded or creased materials will be rejected.

PART 2 PRODUCTS

2.01 GENERAL

A. The materials supplied under these specifications shall be first quality products designed and manufactured specifically for the purposes of this work, and which have satisfactorily demonstrated by prior use to be suitable and durable for these purposes.

2.02 HIGH DENSITY POLYETHYLENE FLEXIBLE MEMBRANE LINER MATERIAL

A. The CONTRACTOR shall supply to the ENGINEER a quality control certificate certifying the test results of the applicable physical properties for HDPE membrane listed in GRI-GM13.

B. The HDPE materials shall be so produced as to be free of creases, holes, blister, undispersed raw materials or any sign of contamination by foreign matter. Any such defect shall be cause for rejection of material by the OWNER and the CONTRACTOR shall immediately remove the defective material from the site.

C. Both the smooth and textured material shall be nominal 60-mil thickness and resistant to, and not be affected by, sensitive to, or break down under exposure to, ultra-violet light. Each roll of furnished HDPE membrane shall be marked to show a minimum of the following information: product type, product thickness, manufacturing batch code, date of manufacture and physical dimension.

PART 3 EXECUTION

3.01 GENERAL

A. The ENGINEER shall be notified seven (7) days prior to commencing installation. The Installation Contractor shall have provided submittals and received approval of material and verified the preparation of the material base the FML is to be placed upon prior to commencing with the installation.

B. The INSTALLATION CONTRACTOR shall provide the OWNER with proof of adequate welding and testing equipment and materials on-site prior to the commencement of installation.

C. Sufficient sandbags and other need materials and equipment shall be on-site to complete installation of the geosynthetic components prior to commencement of any installation.

D. An authorized technical representative of the flexible membrane manufacturer shall be on-site during the installation.

E. Liner panels shall be laid in strict accordance to the manufacturer's instructions and shop drawings. Any necessary deviations shall be documented.

F. The CONTRACTOR shall carry out a visual inspection of the sheet rolls upon arrival at site for possible transport damage. As each sheet is unrolled, the INSTALLATION CONTRACTOR shall carry out further visual inspection of the sheet surface. All defects shall be repaired prior to installation. The OWNER retains the right to reject all defective material.

G. All field seams for liner shall be visually inspected and, in addition, all field seams shall be checked for its entire length using a non-destructive testing method per manufacturer's recommendation. Any weak or unbounded seam shall be repaired with an overlay patch and retested. All patches shall have rounded corners.

H. It shall be the CONTRACTOR's responsibility to provide adequate storage facilities for geosynthetics according to the manufacturer's recommendations. All materials stored on-site shall be protected to keep the material sheets clean and dry.

I. Based on the finding of the leak detection service, all necessary repairs will be made, and costs associated with the repairs paid for by the CONTRACTOR. No additional compensation shall be paid by the OWNER for repairs identified by the leak detection testing.

3.02 DEWATERING

A. The CONTRACTOR shall take all steps necessary, such as ditching, diking, and pumping to keep the excavation areas clear of water/leachate during the progress of the work and until the finished work is safe from damage. The CONTRACTOR shall provide all power, pumps, materials, and miscellaneous apparatus necessary, and shall be responsible for disposing of the water/leachate pumped from the excavation in a manner which will not interfere with other Work within the area or cause damage to property. The CONTRACTOR shall be held responsible for all erosion, sediment deposit, or other adverse results because of the dewatering operations and shall repair any areas affected at no additional cost the OWNER.

1. CONTRACTOR shall note that leachate may not be discharged to surface water or directly onto ground surface. Leachate must be managed in accordance the Landfill's *Leachate Management Plan* (i.e. pumped into leachate management system or back into a lined landfill cell).

B. CONTRACTOR and liner installation contractor responsible for keeping water from getting between FML and clay. If water does accumulate between the FML and the liner, the area should be dewatered and area reworked as necessary.

3.03 HDPE MEMBRANE LINER PLACEMENT

A. The FML subsurface shall be smooth and free of all rocks, stones, sticks, roots, sharp objects, protuberances, weed growth, or debris of any kind. The surface shall provide a firm, unyielding foundation for the liner with no sudden, sharp, or abrupt changes or

breaks in grade. No standing water or excessive moisture shall be evident at the time of liner installation. The receiving surface shall be maintained in an acceptable condition until completion of the liner installation.

CONTRACTOR shall provide ENGINEER with written certification from the liner installer verifying acceptability of the subgrade prior to placement of the geomembrane. The receiving surface shall be maintained in an acceptable condition until completion of the liner installation.

B. Panel Identification: Each panel shall be labeled with an identifying code number or letter consistent with the Installation Contractor's submitted panel layout drawing. The coding is subject to approval by the CQA Monitor.

C. The smooth and textured FML shall be installed throughout as indicated on the plans and approved panel layout. The FML shall be placed over the prepared surfaces in such a manner as to assure minimum handling. The sheets shall be of such lengths and widths and shall be placed in such a manner as to reduce field jointing to a minimum. Only those sheets of lining material which can be anchored and/or sealed together in one day shall be unpackaged and placed in position.

D. HDPE panels shall be laid in a longitudinal direction with a minimum overlap of four inches for wedge welds and three inches overlay for extrusion welds. The weld shall be placed uniformly and shall be of a type suitable for underwater use.

E. Geomembrane sheets shall be closely fit and sealed around inlets, outlets, and other projections through the lining. All projections through the lining shall be sealed and flashed with prefabricated boots. All sealing methods shall be submitted to the ENGINEER for preapproval.

F. Do not deploy FML in the presence of excessive moisture, precipitation, ponded water, or high winds.

G. The INSTALLATION CONTRACTOR shall consult the manufacturer as to the minimum and maximum temperature for handling the flexible membrane.

H. Any portion of the FML damaged during installation shall be removed and repaired using an additional piece of the liner material as specified herein.

I. Protect underlying surface from damage. Repair damage to subgrade or other underlying materials prior to completing deployment of FML.

J. Do not allow unnecessary vehicle traffic directly on FML.

K. Where access or haul roads over the HDPE are to be utilized, a minimum of 3 feet of suitable material as approved by the ENGINEER shall be placed at these locations. Other methods for protecting the HDPE along the haul roads shall be considered by the ENGINEER. The haul roads may be removed and the area restored to project specifications or left in-place at the direction of the ENGINEER.

L. Only sandbags may be used as required to hold the lining in position during installation. Sandbags shall be sufficiently close-knit to preclude fines from working through the bag. Under no circumstances shall the lining be subjected to materials, sandbags, equipment, or other items being dragged across its surface nor shall workmen and others slide down slopes atop the lining. All parties walking or working upon the HDPE material shall wear soft sole shoes. No smoking shall be permitted on the exposed liner material.

M. Install material to account for shrinkage and contraction while avoiding wrinkles. Install material stress-free with no bridging before it is covered. Add material as needed to avoid bridging.

N. Before wrinkles fold over, attempt to push them out. For wrinkles that can not be pushed out, cut them out and repair cuts prior to burial or at the direction of the ENGINEER.

O. Corners and edges of the HDPE shall be located as per Section 01050 of these specifications. The FML shall be secured in an anchor trench at the top of the slope in accordance with the Drawings.

3.04 FIELD SEAMS

A. All field joints shall be done by a seaming process according to the manufacturer's specifications. The lining shall be elevated to the temperature of the weld during installation. No solvents or adhesives shall be allowed.

B. Field seams shall meet the requirements of the ASTM tensile test for both shear (room temperature) (ASTM D6392) and peel (70 degree C) (ASTM D6392). An independent laboratory shall test the seams for shear and peel to verify that they meet the stated ASTM standards. These results shall be provided prior to shop drawing submittal.

C. Extreme care shall be taken throughout the work to avoid fishmouths (bubbles, folds, or imperfect contact) in the field seams. Where fishmouths do occur, they shall be slit out far enough from the seam to dissipate them, lapped, welded together in the lapped area, and a patch placed to cover the entire effected area.

D. Any portion of the liner damaged during installation, by any cause, shall be removed or repaired by using an additional piece of HDPE geomembrane as specified hereinafter.

E. Destructive and non-destructive testing shall be conducted according to the quality control program outlined in Part 4.

3.05 PATCHING

A. Any necessary repairs to the HDPE lining shall be patched with the lining material itself. The patch material shall extend a minimum of three (3) inches in each direction from the damaged area. All patches shall have rounded corners. All patches shall be welded to the main sheet with the extrusion welding process. All seams shall be tested using the vacuum box method (ASTM D6392). Hand held hot air welding shall be allowed only to tack the patch material in place prior to extrusion welding.

B. All joints, on completion of the work, shall be tightly bonded. Any lining surface showing injury due to scuffing, penetration by foreign objects, or distress from rough subgrade shall, as directed by the ENGINEER, be replaced or covered and sealed with an additional layer of HDPE lining of the proper size in accordance with the patching procedures.

3.06 EXTRUSION WELDING

A. The flexible membrane material shall be cleaned and prepared according to manufacturer's procedures, a copy of which shall be given to the ENGINEER one (1) week prior to beginning seaming. Extreme care shall be taken by the INSTALLATION CONTRACTOR in the preparation of the areas to be welded.

B. All sheeting shall be welded together by means of integration of the extrudate material with the lining material. The composition of the extrudate used for the welding of seams shall be identical to the flexible membrane material.

C. The welding equipment used shall be capable of continuously monitoring and controlling the temperatures of the extrusion welder nozzle so as to ensure that changes in the environmental conditions will not affect the integrity of the weld.

3.07 FUSION WELDING

A. The flexible membrane material shall be cleaned and prepared according to manufacturer's procedures, a copy of which shall be given to the ENGINEER one week prior to beginning seaming. Extreme care shall be taken by the INSTALLATION CONTRACTOR in the preparation of the areas to be welded.

B. All sheeting seamed with this process shall be welded together by means of the bond formed when two heated sheets are pressed together.

C. The fusion-welding apparatus shall be an automated vehicular mounted device with variable temperature and speed control.

D. The fusion-welding apparatus shall be fitted with a double wedge shoe to produce a double seam with an enclosed air space.

E. The fusion-welding apparatus shall be capable of continually monitoring and controlling the temperature in the zone of contact (wedge) where the machine is actually fusing the lining material so as to ensure changes in the environmental conditions will not affect the integrity of the weld.

3.08 HDPE INSPECTION

A. An authorized representative shall be present at the job site full-time during HDPE installation and shall certify in writing that the subgrade preparation and HDPE installation is acceptable.

B. The INSTALLATION CONTRACTOR shall provide to the ENGINEER a letter that states that the Installer has inspected the installation and that the installation was installed

in accordance with the manufacturer's specifications.

C. Written documentation shall be compiled by the INSTALLATION CONTRACTOR on the installation of each field seam. This documentation shall be provided to the ENGINEER upon completion of the installation. The authorized representative shall certify in writing that the HDPE was properly installed. This approval shall in no way remove INSTALLATION CONTRACTOR liability for installation or the manufacturer's material warranty.

PART 4 QUALITY CONTROL

4.01 GENERAL

A. Before installation begins, the Installation Contractor shall appoint an experienced individual who will be on-site at all times during the installation to represent them in all matters relevant to this work. This appointment shall be subject to approval by the ENGINEER.

B. Before and during installation, weekly project coordination meetings shall be held with the designated representative of the Installation Contractor, CONTRACTOR, ENGINEER, and OWNER in attendance to review the following information. The following information shall be provided to the ENGINEER by the Installation Contractor during or before this meeting:

1. Progress of the work.

2. Adherence to the Specifications.

3. Adherence to the Quality Control Program, including the timely submission of the pertinent forms.

4. Planned work and methods for the ensuing week, including estimate of time remaining to completion of the work.

C. All of the Forms specified and required must be submitted in a timely fashion.

D. Any changes in the proposed method of work, subcontractors to be utilized, membrane resin or manufacturing must be approved in advance by the OWNER and ENGINEER. The Installation Contractor assumes all responsibility relevant to providing an acceptable product.

4.02 QUALITY CONTROL DURING MANUFACTURING

A. Random sampling of the extruded sheet material shall be performed by the manufacturer at the cost of the Installation Contractor to assure proper quality control in accordance with GRI GM 13. The minimum frequency of such sampling such be as follows:

1. One sample taken from each day's production, and

2. Samples selected randomly by the ENGINEER subsequent to material delivery, or

3. Other as proposed by the Installation Contractor and approved by the ENGINEER.

B. The samples shall be tested for the following properties:

1. Uniformity - Visual inspection to assure the material is free of holes, blisters, undispersed raw material, or foreign matter is mandatory.

2. Thickness - Measurement along the sample to assure that the sheet is within the specified tolerances.

3. Carbon Black - The proper amount, grade, and degree of dispersion are imperative to assure proper UV radiation protection (ASTM D5596).

4. Tensile Properties - One dimensional tensile testing which measures tensile strength at yield at break, and elongation at yield and at break shall be made (ASTM D6693).

C. The Installation Contractor shall provide the OWNER and ENGINEER with certified copies of the manufacturer's test results. No material shall be installed prior to furnishing the required test results.

D. The Installation Contractor shall be solely responsible for the quality of the material provided. Should any of the tests performed on the material yield unsatisfactory results, the Installation Contractor will be responsible for replacing the material with satisfactory materials without delay to the project or cost to the OWNER.

E. The OWNER and ENGINEER, at their discretion, may obtain additional random samples of the membrane sheets for further confirmatory testing. This testing will be at the expense of the OWNER. The Installation Contractor shall, at no additional cost, provide whatever reasonable assistance the OWNER or ENGINEER may require in obtaining the samples.

4.03 QUALITY CONTROL DURING INSTALLATION

A. The Installation Contractor will be required to conduct both destructive and non-destructive testing during the membrane installation as part of the quality control program.

B. The ENGINEER or RPR and Installation Contractor shall visually inspect all material to be included in the work for transport damage and uniformity and compare sheet identification numbers with those on the certification provided by the manufacturer to assure delivery of the appropriate material.

C. The ENGINEER or RPR and Installation Contractor shall also visually inspect the material for any damage incurred as a result of on-site storage.

D. A start-up field test of the seaming equipment and operator shall be performed on a test strip at or near the work location at the start and midpoint of each work day. All trial welds shall be conducted under the same conditions as will be encountered during actual seaming.

The test strip shall be a minimum of 6 feet in length for self-propelled seaming devices, and a minimum of 3 feet for hand-held seaming devices. The tensiometer used for testing the strips and test fixture for making the field test shall be provided by the Installation Contractor at no additional cost. One inch (1") wide cutouts of the test strips seams will be subject to shear and peel adhesion testing at the site. A minimum of three cutouts will be tested for shear, and an additional three cutouts will be tested for peel. All seam tests must be acceptable or the test strip will be repeated until all seam tests from a given test strip are found acceptable. The testing shall be observed by the ENGINEER or RPR. A seam test will be considered a failure if:

1. In the one-dimensional linear tension test, the bonded thickness of the seam fails before the adjacent sheet material for one or more of the three test specimens tested from each sample.

2. In the peel adhesion test, the two sheets comprising the seam separate at the bond interface before tearing an individual sheet (not a film tearing bond) for one or more of the three test specimens tested from each sample.

3. Upon visual inspection, the weld shows:

   a. Excessive deformation; stepping of the bottom sheet when viewed in cross-section.

   b. Discoloration of the sheet.

   c. Inadequate or excessively narrow or flat weld bead.

   d. Water blisters in weld bead.

   e. Misaligned weld bead, i.e., weld not reasonably centered with respect to overlap.

   f. Thinning of the sheet adjacent to the weld.

E. The fixture used for making the specified tests in the field shall be strong enough to permit the operator to determine that the seam is at least as strong as either sheet.

F. Destructive test samples of the installed membrane shall be collected at a minimum average frequency of one (1) test location for every 500 feet of seam length, from randomly determined locations approved by the ENGINEER. The cut-out sections shall be 12 inches wide by 42 inches long with the seam centered lengthwise. The resulting hole shall be patched with an oval shaped piece of 60-mil HDPE, and seamed in accordance with these Specifications.

The Installation Contractor shall provide a punch press, capable of cutting specimens in accordance with ASTM D 6392, for on-site preparation of three sub-specimens for testing. Each sub-specimen shall be properly tagged with the date, location, sample number, and seaming machine number, and distributed as follows:

1. One 12-inch by 15-inch to the installer for field testing. The Installation Contractor

shall test the weld in shear and peel with the Installation Contractor's on-site tensiometer in accordance with ASTM D 6392. Testing shall be completed and reported to the ENGINEER prior to backfilling the seam the coupon represents.

2. One 12-inch by 15-inch for independent laboratory peel and shear testing in accordance with ASTM D 6392. The Installation Contractor shall transmit test results to the ENGINEER within 24 hours after the laboratory receives the weld samples.

3. One 12-inch by 12-inch to the ENGINEER for archive storage.

G. A log shall be maintained by the Installation Contractor for the purpose of recording all test results.

H. If at any time during the installation, the ENGINEER has reason to believe that the seaming process is not performing adequately, he may, to avoid destructive sampling of the installed membrane, request additional test strips. This shall be done by the Installation Contractor at no additional cost. If the test strip seams fail at the site, the reason for the failure shall be resolved before any seaming of the membrane continues within the facility.

I. No membrane will be covered by the CONTRACTOR until such time as the ENGINEER has reviewed the test results required by these Specifications. At a minimum, the pre-delivery testing, the daily log of test strip seam results, laboratory results, as-built drawings of the completed area, and approval of the seams in place will be reviewed. The Installation Contractor shall be held responsible for protection of the installed membranes prior to placement of the granular drainage layer.

J. The ENGINEER and Installation Contractor shall visually inspect all membrane seams. In addition, with regard to the membrane components of the landfill, the Installation Contractor shall test all seams along the entire length, in the manner approved prior to installation, in the presence of the ENGINEER's representative. The recommended test methods are as follows:

1. Pressurized Dual Seam - All field seams made by a double seam hot wedge welding device shall be tested by applying air pressure to a sealed length of seam and monitoring the pressure over time. After making the seam between two adjacent liner panels, each end of the air channel in the weld shall be sealed. A needle, or other approved device, shall be inserted into the sealed channel created by the fusion weld and the channel inflated to a minimum pressure of 30 psig. Monitor and record the pressure in the channel for a period of 5 minutes with an air pressure gauge calibrated in 1 psi increments. The seam shall be considered passing if the pressure drop in 5 minutes is less than 4 psi.

   At the conclusion of the test, cut the end of the air channel at the end opposite the pressure gauge. A decrease in gauge pressure must be observed or the air channel will be considered blocked and the test must be repeated in each direction from the point of blockage.

Air channels which do not hold the minimum specified air pressure, shall be further inspected to identify the location and nature of any unbonded sections of seam. The seam shall then be repaired and retested.

2. Vacuum Box Testing - All field seams, with the exception of hot wedge seams passing the dual seam pressure test described above, shall be inspected for unbonded areas by applying a vacuum to a soaped section of seam. The vacuum shall be applied by a vacuum box equipped with a vacuum gauge, a clear glass view panel in the top, and a soft rubber gasket on the periphery of the open bottom.

   A section of the seam shall be soaped thoroughly and the vacuum box shall be placed over the soaped seam section and the gasket sealed to the liner. A vacuum of between four and eight inches of Mercury (Hg) shall then be applied to the box and the seam observed for signs of bubbles which will appear over unbonded areas. All unbonded areas shall be marked and repaired by the Installation Contractor.

K. All welds shall be observed for traces of deformation to the liner panels. Any welds which, in the opinion of the ENGINEER have caused excessive deformation or show visual signs of overheating of the liner panels, shall be repaired at no additional cost to the OWNER regardless of the result of any destructive testing on the seam. The deficient seam shall be cut out, the liner panels again overlapped and welded, or the seam overcapped.

L. Based on the finding of the leak detection service, the ENGINEER will make the determination as to responsibility of each repair necessary. Costs for material defects and repairs necessary to due installation will be the responsibility of the contracted liner installer. Costs for repairs necessary to due soil materials, placement of the sand drainage layer, or heavy equipment, will be the responsibility of the CONTRACTOR.

M. The Installation Contractor shall provide a Field Seam Sampling and Testing Report to the OWNER and ENGINEER upon completion of FML installation. The report shall include the following:

1. Complete identification of membrane liner system, including type of resin, sheet, source, and thickness.

2. The quality control tests used as specified and/or directed.

3. Complete description of field sampling and analysis procedures, including number of test specimens, size of test specimens, type of test machine used, grip separation, and crosshead speed.

4. Complete description of laboratory test methods.

5. Field and laboratory peel and tensile load values for individual specimens in pounds per inch of width, and also the average load value for each group of specimens.

6. Type of failure in the tests, that is, within the seam within the sheet material, clamp edge or seam edge, for each individual specimen.

7. For non-destructive testing, type of non-destructive test, and number of apparent failures and repairs of seams as reported on a 100 lineal feet of seam basis.

8. Log of all quality control work.

9. Record drawing.

10. Certification by Installation Contractor that all materials were installed in accordance with these Plans and Specifications.

N. Geomembrane Acceptance:

1. Installation Contractor will retain ownership and responsibility for the geomembrane until acceptance by OWNER. Geomembrane liner will be accepted by OWNER when:

   a. Installation is complete;

   b. Leak detection testing has been completed and all necessary repairs identified have been made; and

   c. Written certification letters, including subgrade acceptance letter, resin information letter, leak detection testing results, "Field Seam Sampling and Testing Report", and "as-built" drawings, are received by the OWNER.

END OF SECTION 02905

SECTION 02906

INTERMEDIATE AGGREGATE

PART 1 - GENERAL

1.01 SECTION INCLUDES

A. Work under this section includes descriptions and requirements for the installation of the intermediate aggregate in the leachate collection sumps and trenches.

1.02 RELATED SECTIONS

A. Section 02211 – Rough Grading

B. Section 02914 – Coarse Aggregate

C. Section 02915 – Granular Drainage Layer

D. Section 02910 – Leachate Collection System

1.03 REFERENCES

A. American Society for Testing and Materials (ASTM):

1. ASTM D422-63 - Standard Method for Particle Size Analysis of Soils.

2. ASTM D2487-85 - Standard Test Method for Classification of Soils for Engineering Purposes.

1.04 SUBMITTALS

A. Location of off-site source of materials.

B. Name, address, telephone number and contact person of independent soils laboratory.

C. Off site source material analyses (See part 1.05).

1.05 SOIL MATERIAL SOURCE QUALITY ASSURANCE

A. Independent soils laboratory to be approved by OWNER.

B. Source testing to be performed by CONTRACTOR at no cost to the OWNER.

C. Provide one (1) test per 1,000 lineal feet (minimum of three (3) tests) of each of the following test results per source:

1. Grain size analysis (D422).

2. USCS soil classification (D2487).

PART 2 - PRODUCTS

2.01 SOIL MATERIALS

A. INTERMEDIATE FILTER BLANKET MATERIAL

1. Durable washed, coarse rounded to subangular, durable gravel exhibiting the following characteristics:

Sieve	Percent Passing
3/8"	100%
#4	20-60%
#10	5-25%
#200	0-5%

2. Crushed aggregate and/or limestone are not allowed.

PART 3 - EXECUTION

3.01 FILL USAGE

A. Leachate collection trenches and sumps between coarse aggregate and sand drainage layer as shown on Drawings.

3.02 PREPARATION

A. CONTRACTOR to receive OWNER'S permission to begin installation of intermediate aggregate.

3.03 PLACEMENT

A. Transport material into landfill cell in a manner that will not damage underlying soil or synthetic layers.

B. Place intermediate aggregate in trenches and sumps as shown on Drawings.

C. Do not compact.

D. CONTRACTOR shall place intermediate aggregate by such method as to prevent wrinkling and possible damage to the HDPE liner. Once the geosynthetic lining system has been accepted by the OWNER, it shall be the CONTRACTOR'S responsibility to ensure that the geosynthetics are not damaged. Should they become damaged, the CONTRACTOR shall at his own expense:

1) Immediately notify ENGINEER

2) Have the geosynthetic installer make any necessary repairs at the CONTRACTOR'S expense.

3.04 FIELD QUALITY CONTROL

A. Collect three samples during placement and analyze for soil classification using ASTM D2488.

B. CONTRACTOR is responsible for all costs related to retests of materials not meeting specifications.

3.05 ADJUSTMENT AND CLEANING

A. Remove excess material not suitable for use from the site.

END OF SECTION 02906

SECTION 02907

COARSE AGGREGATE

PART 1 GENERAL

1.01 SUMMARY

A. Work under this section includes descriptions and requirements for the installation of the coarse aggregate in the leachate collection sumps, trenches, and lysimeters.

1.02 RELATED SECTIONS

A. Section 02211 – Rough Grading

B. Section 02906 – Intermediate Aggregate

C. Section 02910 – Leachate Collection System

D. Section 02915 – Granular Drainage Layer

1.03 REFERENCES

A. American Society for Testing and Materials (ASTM):

B. ASTM D422-63 - Standard Method for Particle Size Analysis of Soils.

C. ASTM D2487-85 - Standard Test Method for Classification of Soils for Engineering Purposes.

1.04 SUBMITTALS

A. Location of off-site source of materials.

B. Name, address, telephone number and contact person of independent soils laboratory performing source material analyses.

C. Off site source material analyses (See part 1.05).

1.05 SOIL MATERIAL SOURCE QUALITY ASSURANCE

A. Independent soils laboratory to be approved by OWNER.

B. Source testing to be performed by CONTRACTOR at no cost to the OWNER.

C. Provide a minimum of three (3) tests of each of the following test results per source:

1. Grain size analysis (D422).
2. USCS soil classification (D2487).

PART 2 PRODUCTS

2.01 SOIL MATERIALS

A. Coarse Aggregate

1. Granular material, bank-run sand and bank-run gravel, consisting of rounded durable particles. Crushed aggregate not allowed. Limestone not allowed.

2. Grain Size: Range from maximum diameter of 1 ½-inch to minimum diameter of 5/8-inch (maximum 5% by weight passing #4 Sieve).

3. Uniformity coefficient less than 4.

PART 3 EXECUTION

3.01 FILL USAGE

A. Leachate collection sumps, lysimeters and trenches as shown on Drawings.

3.02 PREPARATION

A. CONTRACTOR to receive OWNER'S permission to begin installation of coarse aggregate.

3.03 PLACEMENT

A. Transport material into landfill cell in a manner that will not damage underlying soil or synthetic layers.

B. Place coarse aggregate in sumps, lysimeters and trenches as shown on Drawings.

C. Do not compact.

D. CONTRACTOR shall place coarse aggregate by such method as to prevent wrinkling and possible damage to the HDPE liner. Once the geosynthetic lining system has been accepted by the OWNER, it shall be the CONTRACTOR'S responsibility to ensure that the geosynthetics are not damaged. Should they become damaged, the CONTRACTOR shall at his own expense:

1. Immediately notify ENGINEER

2. Have the geosynthetic installer make any necessary repairs at the CONTRACTOR'S expense.

3.04 FIELD QUALITY CONTROL

A. Provide a minimum of three (3) tests of each of the following:

1. USCS soil classification (ASTM D2488).

B. In-Place testing to be performed by Northeast Technical Services at CONTRACTOR's expense as included in the Allowance.

C. CONTRACTOR is responsible for all costs related to retests of materials not meeting specifications.

3.05 ADJUSTMENT AND CLEANING

A. Remove excess material not suitable for use from the site.

END OF SECTION 02907

SECTION 02910

LEACHATE COLLECTION SYSTEM

PART 1 GENERAL

1.01 SECTION INCLUDES

A. Work included in this section consists of furnishing all plant, labor, equipment, appliance and materials required to furnish and install a complete leachate collection and detection system as detailed on the Drawings. Leachate collection and detection system includes:

1. Collection Piping
2. Transmission Piping
3. Filter Fabric
4. Related Items

1.02 RELATED SECTIONS

A. Section 02906 – Intermediate Aggregate

B. Section 02907 – Coarse Aggregate

1.03 REFERENCES

A. ASTM D638 – Properties of Plastics.

B. ASTM D790 – Flexural Properties of Plastics

C. ASTM D1238 – Flow Rates of Thermoplastics by Extrusion Plastometer

D. ASTM D1248 - Classification of Polyethylene Pipe

E. ASTM D1505 – Test for Density of Plastics

F. ASTM D1508 – Testing Carbon Black

G. ASTM D1693 – Test for Environmental Stress

H. ASTM D1784 – Standard Specification for Rigid Poly and Chlorinated Poly Compounds.

I. ASTM D1785 - PVC Plastic Pipe, Schedule 40 and 80.

J. ASTM D2122 – Thermoplastic Pipe Materials.

K. ASTM D2321 - Recommended Practice for Underground Installation of Flexible Thermoplastic Sewer Pipe

L. ASTM D2564 - Solvent Cements for PVC Plastic Pipe and Fittings.

M. ASTM D2657 - Joining of Polyethylene Pipe

N. ASTM D2837 – Hydrostatic Design Basis

O. ASTM D3035 – Plastic Pipe Based on Outside Diameter

P. ASTM D3261 – Butt Fusion PE Plastic Fittings

Q. ASTM D3350 - Cell Classification

R. American Water Works Association (AWWA) Standards.

S. Mn/DOT "Standard Specifications for Construction", 2005 Edition.

1.04 SUBMITTALS

A. Provide shop drawings and product data under provisions of Section 01300.

B. Submit manufacturer's installation instructions under provisions of Section 01300.

C. Evidence of certification of personnel performing thermal butt fusion.

1.05 PROJECT RECORD DOCUMENTS

A. Submit documents under provisions of Section 01700.

B. Accurately record horizontal and vertical location of pipe runs, connections, manholes and invert elevations. Reference to benchmark established by OWNER.

1.06 QUALIFICATIONS

A. Polyethylene piping shall be connected only by persons who have received training in the use of the fusion equipment according to the recommendations of the pipe supplier.

PART 2 PRODUCTS

2.01 POLYETHYLENE PIPE AND FITTINGS

A. Shall meet the requirements of Plastic Pipe Institute Designation PE 3408.

B. Shall comply with requirements for Type III, Class C, Category 5, Grade P34 in accordance to ASTM D1248.

C. Cell classification of 345434C in accordance to ASTM D3350 and limits and test methods shall be as follows:

Property	ASTM/Condition	Unit	Value
Density	D1505	g/cm^3	0.941-0.955
Melting Point	DSC	°F	261
RSV	D1601	dl/g	3.0
Melt Index i2.16	D1238 (E)	gms/10 min.	<0.15
Melt Index i21.6	D1238(F)	gms/10 min.	12.0
ESCR, Bell Test	D1693(C)	hours	>1500
Tensile Yield Strength	D638	psi	3,000-<3,500
Elongation at Break	D638, Specimen 1	%	800
Tens. Modulus of Elast.	D638	psi	113,000
Flexural Modulus	D790	psi	110,000-<160,000
Vicat Softening Temp.	D1525	°F	255
Brittleness Temp.	D746	°F	<-180
Heat Distortion Temp.	D648	°F	172
Thermal Expansion	D696	in/in/°F	$1x10^{-4}$
Rockwell Hardness L	D785	--	49
Shore Hardness D	D2240	--	61
Hydrostatic Design	D2837	psi	800
Stress Basis	D2837 100,000 hrs 73 °F (23°C)	psi	1600

D. Leachate collection and cleanout pipe and fittings shall be six-inch SDR 11 polyethylene pipe. The pipe placed along the cell floor shall be perforated with 0.5 inch holes in two rows near the bottom of the pipe, with holes spaced at six inch intervals as shown on the Drawings.

E. Perforated pipe to be perforated at factory.

F. Leachate collection, cleanouts, and fittings shall be heat fusion welded in accordance with the manufacturers recommendations and ASTM D 2657.

H. Acceptable Pipe Manufacturers:

1. Phillips Driscopipe, Inc. – Dallas, TX

2. Poly Pipe Industries – Gainesville, TX

2.02 POLY-VINYL CHLORIDE (PVC) PIPE AND ACCESSORIES

A. CONTRACTOR to furnish and install pipe as shown on drawings.

B. CONTRACTOR to furnish and install reducers and 90° elbows as shown on Drawings.

C. CONTRACTOR to furnish and install type 1A and 1B concrete as shown on Drawings and in accordance with Mn/DOT standard specifications.

2.03 AGGREGATE MATERIALS

A. Specifications for the various aggregate materials required for the construction are provided in Sections 02906 – Intermediate Aggregate, 02907- Coarse Aggregate, and 02915 – Granular Drainage Layer.

2.04 FILTER FABRIC

A. Filter fabric shall consist of material to meet or exceed Mn/DOT Specification 3733, Geotextile.

B. Filter fabric to be used around pipe bedding material and piping shall be as shown on the Drawings.

PART 3 EXECUTION

3.01 GENERAL

A. Install pipe, fittings and accessories at locations shown on the Drawings.

B. Suitable backfill material shall be furnished, placed and compacted around and above the pipe zone.

C. The interior of the pipe shall be carefully cleaned of all dirt, cement or the materials as the work progresses. Pipe shall be thoroughly flushed at the completion of work with water furnished by the CONTRACTOR.

D. Where lines are stubbed out for future connection, each stubbed out line shall be sealed to prevent entrance of groundwater into the pipe.

E. Filter fabric shall be installed in accordance with Mn/DOT Section 2511.3, B2. Splices and joints shall be overlapped a minimum of 18 inches.

3.02 PREPARATION

A. Identify required inverts, lines, levels, contours, and datum before beginning excavations.

B. Locate, identify, and protect utilities that remain from damage.

3.03 PIPE EXCAVATION

A. Excavate subsoil required for piping.

B. Cut trenches sufficiently wide to enable installation of piping and allow inspection. Provide sheeting and shoring as may be necessary to meet all requirements of the applicable safety codes and regulations for the protection of the work and safety of personnel.

C. Correct unauthorized excavation at no cost to OWNER.

D. Where existing conduits, drains, pipes, manholes, catch basins and other structures are encountered, they shall be carefully supported and protected from injury. In case of damage because of negligence, they shall be restored to original condition without cost to the OWNER.

3.04 DEWATERING

A. The CONTRACTOR shall take all steps necessary, such as ditching, diking, and pumping to keep the excavation areas clear of water/leachate during the progress of the work and until the finished work is safe from damage. The CONTRACTOR shall provide all power, pumps, materials, and miscellaneous apparatus necessary, and shall be responsible for disposing of the water/leachate pumped from the excavation in a manner which will not interfere with other Work within the area or cause damage to property. The CONTRACTOR shall be held responsible for all erosion, sediment deposit, or other adverse results because of the dewatering operations and shall repair any areas affected at no additional cost the OWNER.

1. CONTRACTOR shall note that leachate may not be discharged to surface water or directly onto ground surface. Leachate must be managed in accordance the Landfill's *Leachate Management Plan* (i.e. pumped into leachate management system or back into a lined landfill cell).

3.05 PIPE BEDDING

A. Piping shall be laid on stabilized trench bottom and shall be supported to its full length. Protect bottom of excavation from frost and do not place structures or pipe on frozen ground.

3.06 FILTER FABRIC PLACEMENT

A. Geotextile shall be installed throughout as indicated on the Drawings (lysimeter and collection trench). The geotextile shall be placed over the prepared surfaces in such a manner as to assure minimum handling and that the geotextile is not damaged in any way.

B. If geotextile is damaged, damaged sections shall be patched with new material. Patches shall be overlapped a minimum of six inches.

END OF SECTION 02910

SECTION 02915

GRANULAR DRAINAGE LAYER

PART 1 GENERAL

1.01 SECTION INCLUDES

A. Work in this section includes hauling OWNER supplied materials and placement of 12-inches of washed granular material over the 60-mil HDPE liner.

1.02 RELATED SECTIONS

A. Section 01050 - Field Engineering/Surveying

B. Section 02905 – Flexible Membrane Liner System

1.03 REFERENCES

A. Mn/DOT "Standard Specifications for Construction", 2000 Edition.

B. ASTM D422 – Method for Particle-Size Analysis of Soils.

C. ASTM D698 – Moisture-Density of Soils

D. ASTM D2434 - Permeability of Granular Soils.

E. ASTM D2487 - Soil Classification

F. ASTM D2488 – Soil Description

G. ASTM D2922 – Density of Soil In-Place by Nuclear Methods (Shallow Depth).

H. ASTM 3017 – Moisture Content of Soil by Nuclear Method (Shallow Depth).

I. ASTM D5856 – Permeability of Granular Soils

1.04 SUBMITTALS

A. Location of off-site source of materials.

B. Soil pre-qualification data and name of soils laboratory.

PART 2 PRODUCTS

2.01 GRANULAR MATERIALS

A. The granular drainage layer placed over the geomembrane liner shall be constructed with washed granular fill consisting of clean, washed, granular material, free of sharp and angular objects, roots and debris.

B. The granular drainage layer shall have a permeability after installation of at least 1×10^{-3} cm/sec or greater.

C. Sand shall meet the following gradation:

Sieve	% Passing
3/8-inch	100%
#4	95 – 100%
#8	80 – 100%
#16	45 – 80%
#30	15 – 60%
#50	3 – 10%
#100	0 – 2%
#200	0 – 1%

D. The material for the granular drainage layer shall be classified as SW or SP with a uniformity coefficient less than 6 and no organic matter.

E. The OWNER shall pre-qualify the granular material at an OWNER approved testing laboratory for certification of the above specification at a minimum of one sample per 2,000 C.Y. (minimum of three tests) to be placed to demonstrate compliance with the material specifications. The test results shall be supplied to the ENGINEER seven (7) days prior to installation. NO SAND MATERIALS WILL BE DELIVERED TO THE SITE PRIOR TO VERIFYING THAT THE SPECIFICATIONS ARE BEING MET. The testing firm shall make recommendations for placement and compaction of the drainage blanket to maintain the permeability. The OWNER shall bear the costs of soil sampling and testing required to meet the above specifications. Costs associated with the ENGINEER's inspection and approval shall be borne by the OWNER.

F. The OWNER shall be informed prior to beginning to process sand materials so that visits for observing the processing of the sand materials can be scheduled. The OWNER may choose to collect samples at OWNER'S expense, in addition to those required by the CONTRACTOR under these specifications, during processing to verify that the sand specifications are being met.

G. Upon completion of the preparation of processed materials for the sand drainage layer, the prepared stockpile will be designated for use at the Landfill for drainage layer construction only.

H. The CONTRACTOR is responsible for placement of the material to the specified requirements.

I. Any areas not meeting the construction standards shall be reworked at the CONTRACTOR's expense.

J. The OWNER or ENGINEER reserves the option to inspect and reject unsuitable materials.

2.02 IN-PLACE TESTING

A. Samples to be collected by OWNER's REPRESENTATIVE for testing by Northeast Technical Services as part of Allowance.

B. Failed samples to be paid for by CONTRACTOR, not included in Allowances.

C. Installation testing requirements:

1. Permeability test shall be performed at a minimum of once per acre/foot. Results shall conform with Section 2.01.

2. Grain Size Analysis, Uniformity Coefficient, and Soil Classification shall be performed a minimum of once per 2,000 cubic yards. Results shall conform with Section 2.01.

PART 3 EXECUTION

3.01 DRAINAGE LAYER CONSTRUCTION

A. The CONTRACTOR shall clean the FML surface of all loose soil and debris before initiating placement of the granular drainage layer.

B. The CONTRACTOR shall place the granular drainage layer as shown on the Drawings.

C. The CONTRACTOR shall submit to the ENGINEER the manner and method of installing the granular drainage layer prior to beginning construction of the drainage layer.

D. The granular drainage layer shall be carefully placed to avoid damaging the FML. Material shall be placed at the outer edges of the liner and graded toward the center of the cell by a "low ground pressure" crawler tractor to eliminate equipment traffic on the liner. Any damage to the FML will be repaired at the CONTRACTOR's expense.

E. Stockpiling of material to a height of more than five feet shall be prohibited.

F. Thickness of granular drainage layer shall not vary by minus 0 or plus 0.20 feet of the plan thicknesses.

G. Equipment used for placing granular drainage layer shall not be driven directly on the flexible membrane.

H. Placement should be performed to minimize wrinkles in FML. Equipment operators should be briefed on method of placement and affects to thermal expansion and contraction of the liner.

I. If a wrinkle forms, every effort should be made to smooth the wrinkle out. The ENGINEER may direct the CONTRACTOR to work on other areas until more favorable conditions exist for placement of the granular drainage layer.

3.02 QUALITY CONTROL

A. Granular Material Source Prequalification Testing

1. The following testing procedures will be performed for verification of the borrow source:

Description	Method	Frequency	Specification
Particle Size Distribution	ASTM D422	1 test/2,000 c.y.	Max 1% by weight passing through #200 sieve, 100% by weight passing through the 3/8" sieve
Soil Permeability	ASTM D2434	1 test/2,000 c.y.	1×10^{-3} cm/sec
Soil Classification	ASTM D2488	1 test/2,000 c.y. (3 minimum)	SW or SP, uniformity coefficient ≤ 6, no organic matter

2. Prequalification testing of granular soils shall be conducted by an independent laboratory. Costs associated with this testing shall be borne by the CONTRACTOR.

B. Granular Drainage Layer Construction

1. Permeability testing of the drainage layer after installation shall be performed by Northeast Technical Services. Permeability tests shall be performed, one per acre/foot of drainage material placed.

2. The permeability test for granular material (ASTM D2434) shall be performed at a recompacted density of 90% of the Standard Proctor Maximum Density.

3. The granular drainage layer shall have a permeability after installation of at least 1×10^{-3} cm/sec or greater.

C. Drainage Layer Thickness.

1. Surface shall be within plus 0.2 or minus 0 foot tolerance at all locations.

2. The thickness of the drainage layer shall be verified by a topographic survey as required in Section 01050 along a grid pattern no greater than 50 ft. x 50 ft. at the CONTRACTOR's expense. Finished contour elevation of the sand drainage layer will be compared with the finished contour elevation of the clay to determine if adequate thickness is present. Thickness will also be verified using a measuring rule at locations selected by the ENGINEER.

3. The CONTRACTOR shall prepare a record drawing showing the location and thickness of the drainage layer and submit to the ENGINEER as required in Section 01050.

4. The CONTRACTOR shall place additional sand in any area showing a deficiency of granular material and resurvey those areas at no cost to the OWNER.

END OF SECTION 02915

SECTION 02935

FINISH SITE WORK

PART 1 GENERAL

1.01 SECTION INCLUDES

A. Finish Grading.

B. Soil Erosion and Sediment Control.

C. Storm Drainage Culvert and Accessories.

D. Topsoil Replacement.

E. Turf Establishment.

F. Edge of Liner Markers.

G. Access Road.

H. Preparation for Leak Detection Testing.

I. Final Cleanup.

1.02 RELATED SECTIONS

A. Section 02211 - Rough Grading

1.03 REFERENCE

A. Mn/DOT "Standard Specifications for Construction", 2005 Edition.

B. ASTM D4318 - Standard Test Method for Liquid Limit, Plastic Limit, and Plasticity Index of Soils.

C. Association of Official Seed Analysis (AOSA).

1.04 SUBMITTALS

A. Submit shop drawings under provisions of Section 01300.

PART 2 PRODUCTS

2.01 TOPSOIL

A. Have adequate mineral content to support the growth of the vegetation intended to be established.

B. Have one of the following soil textures: loam, sandy loam, silt loam, silty clay loam, or

clay loam.

C. Be free from herbicides which would be detrimental for the intended use.

D. Have adequate fertility for quick establishment of vegetation.

E. Be neither excessively acid or excessively alkaline.

F. Be free from deleterious substances.

2.02 SEED

A. Seed shall comply with current US Department of Agriculture rules and regulations.

B. Seed shall conform to all requirements of Mn/DOT Specification 3876 "Seed". Seed shall be mixture as tabulated below:

Plant Species	Rate (lb/acre)	Relative %
Park Kentucky bluegrass	20	40.0
Smooth bromegrass	10	20.0
Fed fescue	3	6.0
Timothy	4	8.0
Perennial ryegrass	10	20.0
White clover	3	6.0
TOTAL	50	100.0

C. The seed listed above shall be supplemented with perennial ryegrass at a rate of 50 lb per acre (total ryegrass application rate equal to 60 lb/acre).

D. Seeded areas shall include all pre-vegetated areas damaged during construction by the CONTRATOR.

2.03 FERTILIZER

A. Fertilizer shall be in accordance with Mn/DOT Specification 3881. Fertilizer shall contain nitrogen, phosphoric acid, and water soluble potash in the following percentages:

Nutrient	Percent
Nitrogen	10
Phosphoric Acid (phosphorus)	10
Water Solube Potash (potassium)	10

2.04 MULCH

A. Mulch shall be in accordance with Mn/DOT Specification 3882, Type 1. Mulch shall be Type I mulch and shall be anchored per Mn/DOT Specification 2575.3F. Type I mulch shall be used on seeded areas where erosion mats or rip-rap are not used.

2.05 EROSION CONTROL BLANKETS

A. Erosion control blankets, where called for on the Drawings, i.e. berms, shall be a porous biodegradable "straw" turf establishment blanket in accordance with Mn/DOT Specification 3884.

B. The erosion control blanket shall be North American Green SC150, BonTerra CS2, or approved equivalent.

2.06 DRAINAGE PIPING

A. Pipe shall meet all requirements of Mn/DOT Specification 3247 "Corrugated Polyethylene Pipe" and 3226 "Corrugated Metal Pipe".

B. Pipe shall be size and types detailed on the Drawings.

C. Flared end sections shall be installed at pipe end and made of the same material as the pipe and in accordance with Mn/DOT Specifications.

D. Pipe joint shall be made with coupling bands of same material in accordance with manufacturers recommendations.

2.07 ROADWAY AGGREGATE

A. Material shall be Class 5 as specified in Mn/DOT Specifications.

2.08 GUARD RAILS AND APPURTENANCES

A. Shall conform to appropriate Mn/DOT Specifications for the materials used including, but not limited to, guard rails, posts, wire rope, and hardware and fittings.

2.09 RIPRAP

A. Riprap, where called for on the Drawings shall conform to all requirements of Mn/DOT Specifications 3601 "Riprap" and shall be the gradation of Class II.

B. Filter fabric shall be Mn/Dot Specification 3733 "Geotextile" Type III.

2.10 ROADWAY CULVERTS

A. Pipe shall meet all requirements of Mn/DOT Specification 3226 "Corrugated Metal Pipe".

B. Pipe shall be size as detailed on the Drawings.

C. Aprons shall be installed at each end and made of the same material as the pipe and in accordance with Mn/DOT Specification 2501 "Pipe Culverts".

D. Pipe joint shall be made with coupling bands of the same material, at least 12" wide and installed with gaskets.

E. Pipe joint sealer shall be in accordance with Mn/DOT Specification 2501.2F.

2.11 GEOTEXTILE FENCE

A. Fencing shall be:

1. Weight: 4 oz/sy

2. Puncture: 60 lbs.

3. Grab Strength/Elongation: 100 lbs/25%

4. Mullen Burst Strength: 200 psi

5. EOS: 50 to 140

6. Fabric height: 3.0 ft. min.

7. Ultraviolet light resistant: % strength Retained > 90

B. Fencing shall have a polypropylene or steel wire mesh netting with support cord secured to textile to insure overall structural stability.

1. Wire mesch shall be minimum 14 gauge steel and a maximum spacing of 6 inches.

2. Polypropylene netting shall be a maximum spacing of ¾ inch with heavy duty nylon top support cord or equivalent.

C. Support Posts

1. Wood or steel construction minimum length 5 feet.

a. Wood posts: 2" x 2" or equivalent steel posts.

2. Posts shall be driven a minimum of 12 inches into the ground.

2.12 EDGE OF COVER MARKERS

A. Marker posts shall be "T"-shaped steel fence posts, six feet in length.

2.13 LEAK DETECTION TESTING SUPPORT

A. Sand drainage layer to remain moist throughout full depth of the layer during leak detection testing.

B. CONTRACTOR responsible for isolating the cell for leak detection testing.

C. CONTRACTOR to provide an AC power source for the leak location testing (110 VAC, 10 A).

D. Leak detection testing firm shall be provided with one supervised laborer with equipment

necessary to help with the leak surveys as directed by the testing firm.

PART 3 EXECUTION

3.01 GENERAL

A. Keep disturbed areas to a minimum.

B. All tracked soil shall be collected and cleaned by CONTRACTOR from paved roads near the construction site the same day it occurs.

C. Sediment control measures shall be in place at the end of each working day.

D. Repair, replace, and maintain erosion and sedimentation structures until vegetation is re-established or permanent structures are installed. At that time, temporary erosion control structures shall be removed and accumulated sediment and/or debris properly disposed of.

3.02 FINISH GRADING

A. Grade to eliminate uneven areas and low spots. Maintain profiles and contour of grade.

B. Remove roots, weeds and foreign material while grading.

3.03 STORM DRAINAGE CULVERT

A. Install storm drainage culvert in accordance with Mn/DOT Specification 2501 "Pipe Culverts".

B. Lay pipe to slope gradients noted on drawings with maximum variation from true slope of 1/8 inch in 10 feet.

C. The riprap shall be installed at the aprons of the culverts were shown on the Drawings to a depth of 12 inches.

D. CONTRACTOR shall make every effort to place larger stones at the lower elevations.

E. The foundation for the riprap shall be excavated and shaped prior to placement of the filter fabric material. Filter fabric shall be Mn/Dot Specification 3733 "Geotextile" Type III.

F. Remove all sediment and debris from pipe interior.

3.04 SOIL PREPARATIONS

A. Remove all undesirable weeds as directed.

B. Loosen topsoil on all areas with 2:1 slopes or flatter prior to seeding.

C. Cultivate to a depth of three inches using discs or other suitable equipment.

D. Operate equipment at right angles to direction of drainage.

E. Fill all washouts prior to cultivation.

F. Finish all areas to provide a smooth, moist, even-textured foundation on uniform density.

3.05 TOPSOIL

A. Topsoil all areas which are required to be seeded. Place topsoil to the depth of 4 inches when settled.

3.06 TURF ESTABLISHMENT

A. Topsoil preparation and seeding shall be accomplished in accordance with Mn/DOT Specification 2575 "Turf Establishment."

B. Applying Fertilizer and Conditions

1. Apply fertilizer uniformly over the designated area using mechanical spreading devices.

2. Fertilizer shall be applied at rate of 350 pounds per acre.

3. Apply fertilizer no more than 48 hours prior to seeding.

C. Sowing Seed

1. Apply seed mixture over designated areas at a rate of 50 lbs per acre, and 50 lbs per acre of additional perennial ryegrass.

2. Apply seed uniformly by mechanical or hydro-spreading method.

3. Cover all seeded areas by hand raking or other approved means prior to mulching.

D. Applying Mulch

1. Spread mulch uniformly by mechanical means over seeded areas of the project at a rate of 2 tons per acre.

2. Apply mulch in accordance with Mn/DOT Specification 2575.3F.

E. Disc Anchoring

1. Anchor Type 1 mulch with a disc which punches the mulch 2" to 3" into the soil.

2. Anchor mulch immediately after placement.

F. Placing Erosion Control Blankets

1. Place blankets as shown in the Drawings within 24 hours after seeding.

2. Overlap strip ends 10" minimum with upgrade strip on top.

3. Bury upgrade end of each strip minimum 6-inches into soil.

G. Maintenance

1. Maintain all seeded areas until the following conditions are met:

a. Establish a good stand of grass satisfactory to OWNER.

b. Capable of resisting erosion.

2. Watering of turf shall be included in maintenance. Seed bed shall be kept wet until seed germinates. Water shall be applied as spray or by dispersion to prevent run-off or damage.

3.07 SOIL EROSION AND SEDIMENT CONTROL

A. Erosion control shall be accomplished in accordance with Mn/DOT Specification 2573, "Temporary Erosion Control" and the Landfill's "General Storm Water Permit for Industrial Activity" under the National Pollutant Discharge Elimination System (NPDES) and State Disposal System (SDS) Permit Program, and placed at locations shown on the Drawings or as needed as determined by the ENGINEER. A separate storm water permit for construction activity is required, and will be prepared by the ENGINEER to be followed by the CONTRACTOR.

B. The CONTRACTOR will be responsible for installing appropriate erosion and sediment control devices for all areas disturbed by construction.

C. All silt fences and hay bales shall be inspected immediately after each run-off event and at least daily during prolonged rainfall.

D. Any required repairs will be made immediately.

E. If sediment deposit reaches one-half the height of the barrier, the sediment shall be removed.

1. Any sediment deposits remaining in place after the silt fence or filter barrier is not longer required shall be removed and/or dressed to conform with the existing grade, prepared and seeded.

3.08 ROADWAY CONSTRUCTION

A. Construct to width of road, as shown on Drawings, in 3-inch to 6-inch lifts and to compacted thickness of 12-inches. Construct roads to elevation and cross slope as shown on Drawings.

B. Place materials when surface is dry and air temperature is above freezing.

C. Salvage existing Class 5 aggregate from those portions of existing access road being removed and use of new access roads.

D. Construct base course in accordance with Mn/DOT Specifications, except as modified herein:

1. Compaction shall be obtained by ordinary compaction method.

2. Testing frequency to be continuous.

3. Remove work which does not meet specifications and replace and retest.

3.09 GUARD RAIL

A. Install guard rail in accordance with Mn/DOT Specifications and Mn/DOT Standard Plate 8307A.

B. Install posts at horizontal offset distance of 2-feet from the shoulder of the road.

3.10 EDGE OF LINER MARKERS

A. Install edge of liner marker posts (steel "T" posts) at the corners of the liner and along the boundary as shown on the Drawings.

3.11 LEAK DETECTION TESTING PREPARATION AND SUPPORT

A. CONTRACTOR will be responsible for preparing the landfill for the leak detection testing service.

1. CONTRACTOR to insure there is adequate moisture in the sand layer during the leak detection testing. Moisture must be present in the sand for the full depth at all times during the testing.

2. If necessary, CONTRACTOR will remove dry sand along the survey lines or wet the surrounding area with water to maintain a good electrical contact with the sand during testing.

3. CONTRACTOR shall provide electrical isolation between the sand on the geomembrane and the surrounding soil, waste, or other electrically conducting materials. Isolation shall be provided by leaving a strip of geomembrane exposed around the perimeter of the Phase cell area to be testing.

a. The width of the isolation strip must be adequate to prevent the sand from caving in and bridging the strip, and wide enough so water puddles do not bridge the gap. The strip must also be placed at any access ramps, and at any places where leachate pipe enters or exits the cell.

B. CONTRACTOR to provide leak location testing firm with an AC power source for the duration of testing (110 VAC, 10A).

C. CONTRACTOR responsible for uncovering, exposing, and repairing any leaks found in the geomembrane.

D. CONTRACTOR shall remove any standing water from the surface of the sand.

E. Leak detection firm shall be provided one supervised laborer with equipment to help with the leak surveys as directed by the testing firm.

3.12 FINAL CLEANUP

A. Before final acceptance, the CONTRACTOR shall remove all surplus and discarded materials, equipment, rubbish, and temporary structures from the Landfill; and all parts of the work, including stockpile areas, shall be left in acceptable condition. Location of disposal is at the direction of the Landfill Operator.

B. CONTRACTOR shall re-establish all disturbed areas adjacent to the Work to their original condition.

C. Restore borrow and stockpile areas to drain, and leave in a neat and orderly condition.

D. Damage to access roads by construction traffic will be the responsibility of the CONTRACTOR. Before final acceptance of the Work, CONTRACTOR shall reshape, regrade, provide additional material, and compact all access and haul roads damaged by construction traffic as needed to provide a surface area complying with the above specifications for gravel road construction.

END OF SECTION 02935

SECTION 03100

CONCRETE FORMWORK

PART 1 GENERAL

1.01 DESCRIPTION

A. The concrete structures shall be formed and poured in place.

B. Install and remove forms required for the placement of cast-in-place concrete and grout.

1.02 STANDARDS

A. Conform to the following standards:

1. American Concrete Institute (ACI) – ACI-347-68, "Recommended Practice for Concrete Formwork."

2. ACI-301-66 "Specifications for Structural Concrete for Building."

1.03 RELATED SECTIONS

A. Section 3300 – Cast-In-Place Concrete

PART 2 PRODUCTS

2.01 MATERIALS

A. Form Materials: Use new materials.

B. Board Forms: "Standard" grade Douglas fir.

C. Plywood Forms: Exterior fir plywood, EXT-DFPA-AC. Use for all walls which are exposed to view.

D. Form Ties: For exposed work, obtain OWNER's approval of type used.

E. Metal Panel Wall Forms: For exposed work, obtain OWNER's approval.

2.02 FABRICATION AND PLACEMENT

A. Construct forms to slopes, lines, and dimensions shown, plumb and straight and sufficiently tight to prevent leakage.

B. Brace, shore, tie to prevent displacement due to weight of liquid concrete together with movements of men and material. Use 2-inch dimensional lumber edge forms for slabs where necessary to obtain straight edges and joints.

PART 3 EXECUTION

3.01 APPLICATION

A. Verify lines, levels, and centers before proceeding with formwork.

1. Keep all board and plywood forms wet prior to placing concrete; wet thoroughly just before placing.

2. Erect formwork, to achieve design requirements, in accordance with requirements of ACI 301.

3. During cold weather, remove ice and snow from within forms. Do not use de-icing salts. Do not use water to clean out forms, unless formwork and concrete construction proceed within heated enclosure. Use compressed air or other means to remove foreign matter.

END OF SECTION 03100

SECTION 03300

CAST-IN-PLACE CONCRETE

PART 1 GENERAL

1.01 SCOPE

A. Labor and material necessary to complete all cast-in-place concrete.

1.02 STANDARDS

A. Conform to the latest edition of the following standards of the American Concrete Institute (ACI), as applicable to cast-in-place concrete except as modified herein:

1. ACI-301, "Specifications for Structural Concrete for Buildings."
2. ACI-318, "Building Code Requirements for Reinforced Concrete."
3. ACI-614, "Recommended Practice for Measuring, Mixing, and Placing Concrete."

1.03 RELATED SECTIONS

A. Section 03100 – Concrete Formwork.

PART 2 PRODUCTS

2.01 MATERIALS

A. Portland: ASTM C150 "Specification for Portland Cement" Type IIA.

B. ASTM C33X "Specifications for Concrete Aggregates" hard uncoated gravel or crushed stone maximum size 1/5 narrowest dimension between reinforcing bars but not to exceed dimensions shown on the drawings.

C. Water: Clean, free from oil, acids, alkalis, organic materials.

D. Air Entraining Agent: Conform to ASTM D260 "Specifications for Air-Entraining Admixtures for Concrete" Company.

E. Curing Compounds: Curing compounds conforming to "Specifications for liquid membrane – forming compounds for curing concrete" (ASTM C309), shall be approved by the OWNER or OWNER's REPRESENTATIVE. All floors shall be treated with curing compounds as approved by the OWNER or OWNER's REPRESENTATIVE and as specified.

2.02 QUALITY, STRENGTH AND PROPORTIONS

A. The allowable stresses are based on the specified 28-day compressive strength of the concrete. The strength of concrete for which all parts of the concrete were designed is 4,000 psi minimum compressive strength at 28 days.

B. Water content of design mix shall be determined by a trial mix which shall produce a slump of 3 ± 1 inches, 30 minutes after mix has been made.

C. Proportions of the concrete shall produce a mixture that will work readily into the corners and angles of the forms and around the reinforcement without permitting the material to segregate or free water to collect on the surface.

D. Consistency required for each pour shall be established in advance by the OWNER in cooperation with the CONTRACTOR in accordance with ASTM C143 "Test Method for Slump of Portland Cement Concrete" and according to the following slump ranges:

1. Footings and Slabs: 1-inch to 4-inches

E. The air content of air entrained concrete shall be 6% ± 1%.

PART 3 EXECUTION

3.01 MIXING

A. Job Mixed: Ingredients for each batch measured by weight. Use an approved mechanical batch mixer equipped with charging hopper, water storage tank and measure, counter and timer. Rotate mixer at speed recommended by the manufacturer; mix for at least 1-1/2 minutes after all materials are in mixer; do not use concrete which has not been placed within one hour after mixing; clean mixer frequently.

B. Ready-Mixed: Mix, deliver, and discharge within time limits according to ASTM C94 "Specification for Ready-Mixed Concrete" and Specifications and Test Methods for Ready-Mix Concrete Association.

C. Joints not indicated on the plans shall be made and located so as not to impair the strength of the structure. Surface of the concrete shall be thoroughly cleaned and all laitance removed at joints. Thoroughly wet vertical joints with a coat of neat cement grout immediately before placement of new concrete.

3.02 CONVEYING AND DEPOSITING

A. CONTRACTOR's Concrete Log: For all work, record time, place, mix design, quality, slump concrete temperature, air temperature and weather conditions, cylinders taken, date shoring is removed, curing and other data.

B. Conveying From Mixer to Place of Final Deposit: By methods which will provide virtually continuous flow of concrete from delivery and without separation or loss of materials. Slope chutes not more than 1 to 2, not less than 1 to 3. (Steeper slopes permitted for stiff mixes.) chute concrete into center of buggies, buckets or forms. Do not chute against sides of forms. Elephant trunks must be used for deposition of concrete against forms coated with retarder.

C. Hot Weather Requirements:

1. Avoid drying of the concrete prior to finishing operations. Use of windbreaks,

sunshades, fog sprays, or other devices shall be provided as directed by the OWNER or OWNER's REPRESENTATIVE.

2. Concrete deposited in hot weather shall not have a placing temperature that will cause difficulty from loss of slump, flash set, or cold joints. Concrete temperatures shall be less than 90°F. unless permitted by the OWNER or OWNER's REPRESENTATIVE.

3. Curing compounds shall be sued only where specified or approved by the OWNER or OWNER's REPRESENTATIVE.

3.03 TESTS

A. Aggregate: ASTM C33 "Specification for Concrete Aggregates" C136. Test data to be used in concrete mix design. Use only current aggregate tests.

B. Slump: ASMT C143 "Test Method for Slump of Portland Cement Concrete" CONTRACTOR maintain apparatus (mold, tamping rod, scoop) at job site during placing of concrete.

C. Entrained Air Test: ASTM C231 "Test Method for Air Content of Freshly Mixed Concrete by the Pressure Method" approved testing laboratory at the direction of the OWNER.

D. COMPRESSION: ASTM Specification C31 "Method of Making and Curing Concrete Test Specimens in the Field", C39 "Test Method for Compressive Strength of Cylindrical Concrete Specimens." Test cylinders ASTM C3 Standard 6-inch diameter, made on the job site, tested at approved laboratory for 7 days and 28 day test. Mark cylinders with location of pour, date, time, clump by actual test, mix proportions, and person taking cylinder. Mold ASTM C410.

1. Make the following compression tests:

a. Two cylinders for each day where from 5 to 50 cubic yards are placed.

b. A minimum of 2 cylinder from each floor slab regardless of the quantity.

c. Where quality of hardened concrete is questioned, or if other conditions warrant, the OWNER or OWNER's REPRESENTATIVE may direct the taking of concrete hammer rebound tests or ASTM C42 "Method of Obtaining and Testing Drilled Cores and Sawed Beams of Concrete" core drilled tests. CONTRACTOR pays cost of the tests..

d. If quality of hardened concrete is still questioned, OWNER may require job loading tests according to ACI 318. If tests indicate satisfactory concrete, OWNER will pay for the test.

E. Test Results: Testing laboratory to send copies of all tests to the OWNER.

END OF SECTION 03300

SECTION 09900

PAINTING

PART 1 GENERAL

1.01 WORK INCLUDED

A. Surface preparation and finish.

B. Schedule at end of section.

1.02 RELATED SECTIONS

A. Section 02910 - Leachate Collection and Detection System.

1.03 SUBMITTALS

A. Submit product data and manufacturer's application instructions.

1.04 DELIVERY, STORAGE, AND HANDLING

A. Deliver products to site in sealed and labeled containers; inspect to verify acceptance.

B. Container labeling to include manufacturer's name, type of paint, brand name, brand code, coverage, surface preparation, drying time, cleanup, color designation, and instructions for mixing and reducing.

C. Store paint materials at minimum ambient temperature of 45 degrees F and a maximum of 90 degrees F, in well ventilated area, unless required otherwise by manufacturer's instructions.

D. Take precautionary measures to prevent fire hazards and spontaneous combustion.

1.05 ENVIRONMENTAL REQUIREMENTS

A. Store and apply materials in environmental conditions required by manufacturer's instructions.

PART 2 PRODUCTS

2.01 MATERIALS

A. Coatings: Ready mixed, except field catalyzed coatings. Process pigments to a soft paste consistency, capable of being readily and uniformly dispersed to a homogeneous coating. Good flow and brushing properties; capable of drying or curing free of streaks or sags. Approved product: "Kop-Coat" Bitumastic 300M or approved equivalent.

B. Unless noted otherwise, provide best quality grade of coatings available by the approved manufacturers.

C. Accessory Materials: Linseed oil, shellac, turpentine, paint thinners and other materials not specifically indicated but required to achieve the finishes specified, of commercial quality and approved by paint manufacturer.

PART 3 EXECUTION

3.01 INSPECTION

A. Verify that surfaces are ready to receive work as instructed by the product manufacturer.

B. Examine surfaces scheduled to be finished prior to commencement of work. Report any condition that may potentially affect proper application.

C. Beginning of installation means acceptance of existing surfaces.

3.02 PREPARATION

A. Correct minor defects and clean surfaces which affect work of this Section.

B. Shellac and seal marks which may bleed through surface finishes.

C. Concrete Surfaces: As recommended by coating manufacturer.

3.03 PROTECTION

A. Protect elements surrounding the work of this Section from damage or disfiguration.

B. Repair damage to other surfaces caused by work of this Section.

C. Furnish drop cloths, shields, and protective methods to prevent spray or droppings from disfiguring other surfaces.

D. Remove and properly dispose of empty paint containers from site.

3.04 APPLICATION

A. Do not apply finishes to surfaces that are not dry.

B. Apply products in strict accordance with manufacturer's instructions.

C. Apply two coats coal tar epoxy coating to interior of concrete pump access vault (includes floor and walls). Apply each coat to uniform finish. Allow applied coat to dry before next coat is applied. Sand lightly between coats to achieve required finish. Coating shall be applied to a total minimum covered thickness of 16 to 20 mils.

3.05 CLEANING

A. As Work proceeds, promptly remove paint where spilled, splashed, or spattered.

B. During progress of Work maintain premises free of unnecessary accumulation of tools, equipment, surplus materials, and debris.

C. Collect waste, cloths, and material which may constitute a fire hazard, place in closed metal containers and properly remove from site daily.

END OF SECTION 09900

SECTION 15006

LEACHATE SUMP PUMP AND CONTROLS

PART 1 GENERAL

1.01 SECTION INCLUDES

A. Work in this section includes furnishing all plant, labor, equipment, appliance, and materials required to install submersible leachate sump pump systems and controls. System shall include, but is not limited to: pumps, pump cradles, level sensors, discharge hoses, retrieving lines, flow meter, and control equipment.

1.02 RELATED SECTIONS

A. Section 02910 - Leachate Collection and Detection System.

B. Division 16 - Electrical.

1.03 REFERENCES

A. AWWA - American Water Work Association.

B. NEMA - National Electric Manufacturers Association.

C. UL Approval of Control Panel.

1.04 SUBMITTALS

A. Submit shop drawings and product data under provisions of Section 01300.

B. Submit product data and installation instructions.

1.05 OPERATION AND MAINTENANCE DATA

A. Submit manufacturers standard operation and maintenance data under provisions of Section 01700.

1.06 DELIVERY, STORAGE AND HANDLING

A. Deliver, store and protect product under provisions of Section 01600.

1.07 WARRANTY

A. The pump unit and control system shall be warranted to be free from defects in materials and workmanship for a period of one year from date of start-up.

PART 2 PRODUCTS

2.01 LEACHATE SUMP PUMP

A. Sump pumps shall be a 3 HP, EPG WSD 15-5 SurePump wheeled stainless steel sump drainer as manufactured by EPG Companies, or approved equivalent.

B. Motors shall operate at 480 VAC, 60 Hertz, 3 phase service with 250 feet of jacketed motor lead.

C. Pump shall be capable of running dry without damage to pump or motor.

D. Motor lead wires shall be no-splice with water proof "chemically resistant" insulation and of the length specified above.

E. SurePumps shall be fitted with a submersible level sensor system including a submersible level transmitter and 200 feet of chemically resistant lead wire.

F. 200-feet of stainless steel lifting cable.

G. Built-in check valve shall have a small hole drilled in them to allow leachate to drain back into the cell.

2.02 CONTROL PANEL AND ELECTRICAL WIRING

A. Sump pumps shall be controlled by an EPG L925 PT Pumpmaster control panel, or approved equivalent, to operate one 3 HP, 460 VAC, 3 phase motor. System shall include Level Master submersible level control system, flow rate control system, NEMA Type 4 rated starter, elapsed time meter, top mounted alarm light, and high level shut-off circuit (interlocks to shut down pump when leachate storage tank is at capacity).

B. The control panels shall be anchored to 4" x 4" treated wood posts as shown on the Drawings.

2.03 PUMP RETRIEVING LINE

A. Sump pumps shall be equipped with a 1/8-inch stainless steel line and stainless steel clamps. Retrieving line shall be secured as shown on the Drawings.

2.04 LEACHATE SUMP PUMP DISCHARGE PIPING

A. Discharge pipe from the leachate sump pumps to the leachate vaults shall be 2" PVC flexible discharge hose, as identified on the Drawings. Hose shall be connected at pump end using a male adapter and two stainless steel clamps and at top discharge end using a plastic, quick lock-style cam coupler (quick disconnect).

2.05 LEACHATE SUMP PUMP CONTROLS

A. Leachate sump pump controls will be as shown on the Drawings.

PART 3 EXECUTION

3.01 INSTALLATION

A. Install level sensor system on pumps as shown on the Drawings.

B. Install pumps in leachate sump access piping as detailed on the Drawings.

C. Install control panels where shown on the Drawings.

D. Connect control panels to power source where shown on the Drawings.

E. Coordinate placement of pipe openings to accommodate valves, meters and controls.

F. Provide three sets of record drawings, parts lists, and operations and maintenance manuals for the equipment provided.

3.02 START-UP

A. Provide services of factory service person to inspect pump installation prior to start-up, to supervise initial operation and to provide training to operator.

END OF SECTION 15006

Appendix D

Construction Quality Assurance Manual

Design Report
St. Louis County Regional Landfill

Construction Quality Assurance Program
St. Louis County Regional Landfill

Prepared and Submitted by:

ST. LOUIS COUNTY ENVIRONMENTAL SERVICES DEPARTMENT
Northland Office Center, Suite 115
307 1st Street South
Virginia, Minnesota 55792

NORTHEAST TECHNICAL SERVICES, INC.
315 Chestnut Street
P.O. Box 1142
Virginia, Minnesota 55792

and

LIESCH ASSOCIATES, INC. (TerraCon)
350 St. Peter Street
St. Paul, Minnesota 55102

July 2013

Table of Contents

Page

I. INTRODUCTION 1

II. HDPE GEOMEMBRANE, GEOTEXTILE FABRIC AND HIGH DENSITY POLYETHYLENE PIPE QUALITY ASSURANCE 2

III. SAND DRAINAGE LAYER, INTERMEDIATE AGGREGATE AND COARSE AGGREGATE QUALITY ASSURANCE 3

IV. SITE CLEARING, EARTHWORK AND ROCK EXCAVATION QUALITY ASSURANCE 4

V. CLAY LINER CONSTRUCTION QUALITY ASSURANCE 5

VI. LANDSCAPING - TURF ESTABLISHMENT 6

VII. DOCUMENTATION REPORT AND RECORD DRAWINGS 7

Section I
Introduction

This manual describes Construction Quality Assurance (CQA) procedures for the installation of the soil and geomembrane components of lining and high density polyethylene pipe systems and landscape establishment of the St. Louis County Regional Landfill. The term "Quality Assurance", used in its broadest sense, is based upon the concept of "Quality Control". This manual is to be used as the basis of the overall CQA program.

The overall goals of this construction quality assurance program are to ensure that proper construction techniques and procedures are used and to verify that materials and installation techniques used meet the project design requirements. To this end, the contractor is required to allow the County or its representative to make visual and physical inspections of all aspects of cell construction at the St. Louis County Regional Landfill. At completion of the work, the CQA program will culminate in a certification report which documents that the construction is in accordance with design standards and specifications.

Section II
HDPE Geomembrane, Geotextile Fabric and High Density Polyethylene Pipe Quality Assurance

A. HDPE QUALITY ASSURANCE

Manufacturing and construction quality assurance will be performed on all components of HDPE geomembrane. Criteria to be used for determination of acceptability of the installation will be as identified in the project plans and specifications. Please refer to Design Report - Appendix C, Section 02905 - Flexible Membrane Liner for detailed descriptions of testing and installation specifications.

The St. Louis County or their representative will certify that the installation has proceeded in accordance with the Quality Assurance Plan and Specifications for the project except as noted in the documentation report.

B. GEOTEXTILE FABRIC QUALITY ASSURANCE

Site preparation, fabric testing and installation quality are necessary to meet the requirements for the St. Louis County Regional Landfill. All specifications for geotextile fabric are detailed in the Design Report - Appendix C, Section 02300 - Sub-Cut and Sub-Base Construction.

C. HIGH DENSITY POLYETHYLENE PIPE QUALITY ASSURANCE

Materials, performance requirements, and installation standard for HDPE pipe are detailed in the Design Report - Appendix C, Section 02910 - Leachate Collection and Detection System.

Section III
Granular Drainage Layer, Intermediate Aggregate and Coarse Aggregate Quality Assurance

A. GRANULAR DRAINAGE LAYER QUALITY ASSURANCE

The County or its representative will test all soils to assure they meet engineering specifications before they are accepted at the construction site, as well as after they are in-place. Details of testing requirements for the sand drainage layer soil characteristic and installation parameters are provided in the Design Report, Appendix C - Section 02915 - Granular Drainage Layer.

B. INTERMEDIATE AGGREGATE QUALITY ASSURANCE

Coarse aggregate and intermediate filter blanket materials must be source tested before delivery to the site. Details on soil specifications and placement of coarse aggregate and intermediate filter blanket are found in the Design Report, Appendix C - Section 02913 - Coarse Aggregate.

C. COARSE AGGREGATE QUALITY ASSURANCE

Coarse aggregate and intermediate filter blanket materials must be source tested before delivery to the site. Details on soil specifications and placement of coarse aggregate and intermediate filter blanket are found in the Design Report, Appendix C - Section 02907 - Coarse Aggregate.

Section IV
Site Clearing, Earthwork and Rock Excavation Quality Assurance

Construction quality assurance will be performed by St. Louis County or their representative on all components of soil construction. Criteria to be used for determination of acceptability of the construction work will be as identified in the project specifications and plans.

Construction Quality Assurance testing will consist of (1) observation of the work, (2) field and laboratory test, and (3) survey. All field and laboratory tests will be conducted on samples taken from material during the course of the work.

A. SITE CLEARING

Clearing, grubbing, stripping and stockpiling topsoil must be accomplished in a manner so as to prevent obstruction of daily operations of the landfill. Details on quality assurance for site clearing activities are found in the Design Report, Appendix C - Section 02110 - Site Clearing.

B. EARTHWORK

The Design Report, Appendix C - Section 02211 - Earthwork details the testing methods, soil class specifications, excavation, and installation requirements for earthwork and the St. Louis County Regional Landfill.

C. ROCK EXCAVATION

The St. Louis County Regional Landfill is sited on old iron ore mine dumps. Rock excavation is necessary during construction when the material in-place is of a hardness or size that it cannot be excavated and removed without the use of blasting or pneumatic tools. The Design Report, Appendix C - Section 02310 - Rock Excavation details the quality assurance specifications for rock excavation.

Section V
Clay Liner Construction Quality Assurance

Clay used as liner material, and encasements for manholes, leachate storage tanks and collection piping must be tested. Test results must be reviewed and approved by the engineer prior to acceptance at the construction site. Specifications for clay properties, testing requirements and clay liner placement are detailed in Design Report, Appendix C - Section 02900 - Clay Liner Construction.

Quality assurance details for placement of topsoil and fertilizer prior to seeding, then mulch and soil erosion mat application are found in Design Report, Appendix C - Section 02935 - Finish Site Work.

Section VII
Documentation Report and Record Drawings

The documentation report is the summary document of the construction activities throughout the project. The construction portion of the report will include discussion of all documented procedures. The report will include results from field and laboratory tests and summarize survey documentation. The documentation report will be certified by a professional engineer registered in the state of Minnesota.

Appendix E

Facility Drawings

Design Report
St. Louis County Regional Landfill

2013 APPLICATION FOR REPERMIT
ST. LOUIS COUNTY
REGIONAL LANDFILL

VIRGINIA, MINNESOTA

LIESCH ASSOCIATES, INC.
13400 15th Avenue North. Minneapolis, MN 55441. 612-559-1423
Minneapolis, MN * Madison, WI * Phoenix, AZ

Northeast Technical Services
"solutions for technical concerns"

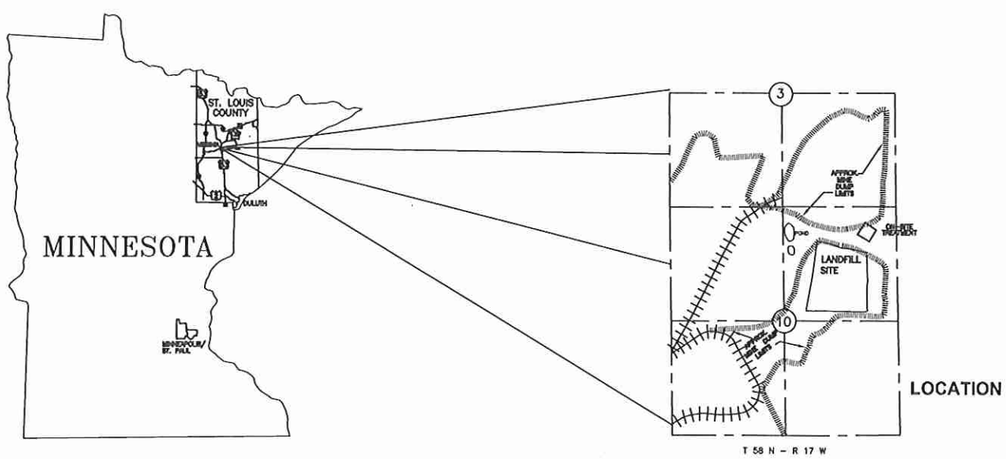

LOCATION MAP
N.T.S.

SITE MAP

INDEX TO DRAWINGS

SHEET 1 COVER SHEET
SHEET 2 EXISTING CONDITIONS PLAN
SHEET 3 OVERALL BASEGRADE PLAN
SHEET 4 OVERALL FINAL COVER PLAN
SHEET 5 GAS COLLECTION SYSTEM PLAN
SHEET 6 CROSS-SECTIONS
SHEET 7 LINER SYSTEM DETAILS
SHEET 8 PHASE 1 AND PHASE 2 LEACHATE COLLECTION SYSTEM DETAILS
SHEET 9 PHASE 4 LEACHATE COLLECTION SYSTEM DETAILS
SHEET 10 PHASE 6 LEACHATE COLLECTION SYSTEM DETAILS
SHEET 11 PHASE 1 AND PHASE 2 LEACHATE COLLECTION SYSTEM DETAILS
SHEET 12 PHASE 4 LEACHATE COLLECTION SYSTEM DETAILS
SHEET 13 PHASE 6 LEACHATE COLLECTION SYSTEM DETAILS
SHEET 14 CLOSURE DETAILS
SHEET 15 CLOSURE DETAILS
SHEET 16 EXISTING PRIMARY SPRAYFIELD CONFIGURATION
SHEET 17 PROPOSED SECONDARY EXPANSION SPRAYFIELD CONFIGURATION
SHEET 18 LEACHATE SPRAY APPLICATION DETAILS

JULY 2013

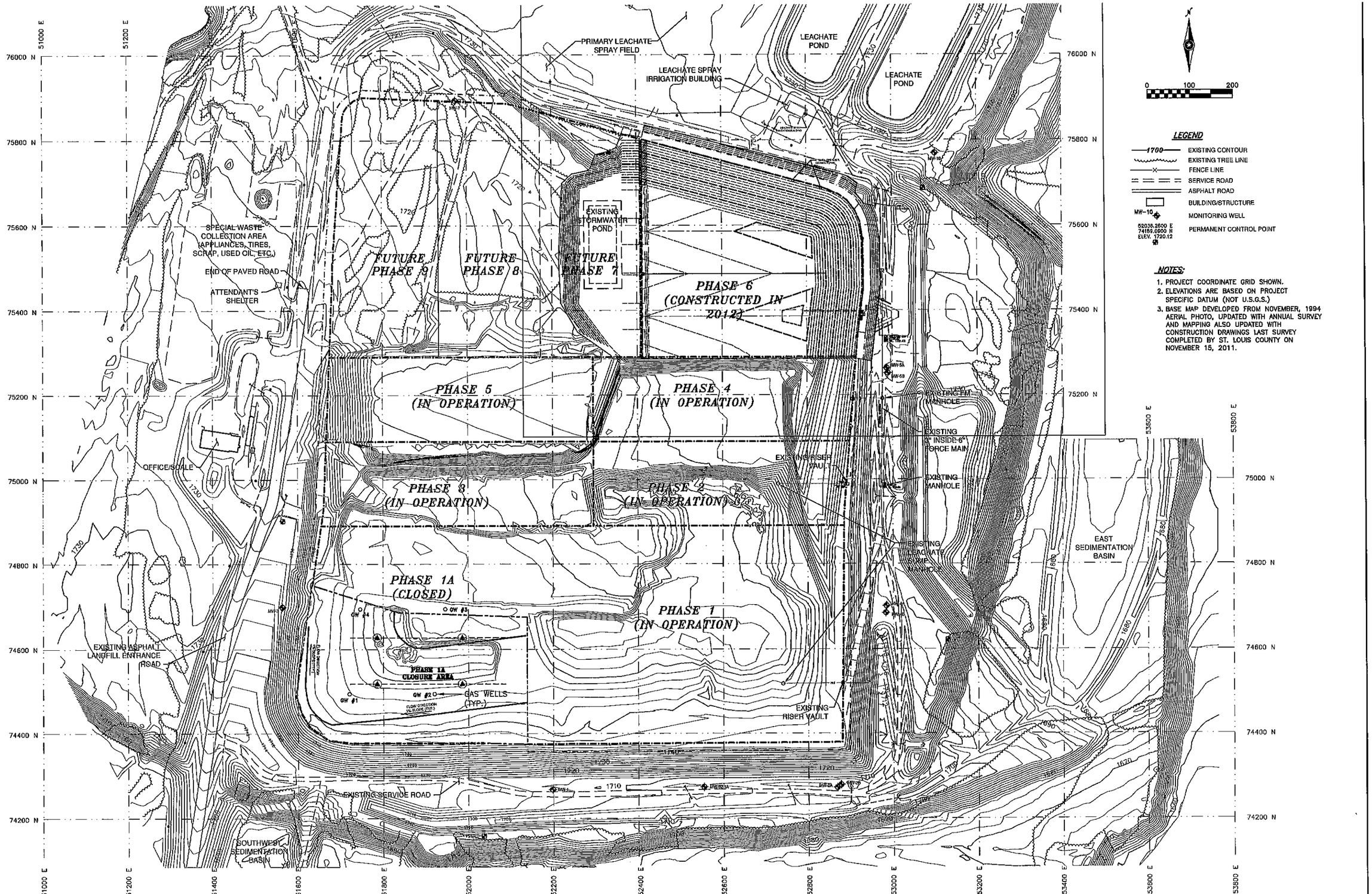

0 100 200

LEGEND

- 1700 — EXISTING CONTOUR
- EXISTING TREE LINE
- FENCE LINE
- SERVICE ROAD
- ASPHALT ROAD
- BUILDING/STRUCTURE
- MW-10 — MONITORING WELL
- 52038.2600 E, 74169.0900 N, ELEV. 1720.12 — PERMANENT CONTROL POINT

NOTES:

1. PROJECT COORDINATE GRID SHOWN.
2. ELEVATIONS ARE BASED ON PROJECT SPECIFIC DATUM (NOT U.S.G.S.)
3. BASE MAP DEVELOPED FROM NOVEMBER, 1994 AERIAL PHOTO, UPDATED WITH ANNUAL SURVEY AND MAPPING ALSO UPDATED WITH CONSTRUCTION DRAWINGS LAST SURVEY COMPLETED BY ST. LOUIS COUNTY ON NOVEMBER 15, 2011.

NO.	DATE	BY	REMARKS
4			
3			
2			
1			

DESIGNED	JB	DATE	JUNE 2013
DRAWN	MK	DATE	JUNE 2013
APPROVED	JB	DATE	JUNE 2013

I hereby certify that this plan, specification, or report was prepared by me or under my direct supervision and that I am a duly Licensed Professional Engineer under the laws of the State of Minnesota.

James C Barkas
Date 6-28-13 Rep. No. 44916

LIESCH
www.liesch.com
Hydrogeologists • Engineers • Environmental Scientists
Minneapolis • Los Angeles • Milwaukee • Phoenix

2013 APPLICATION FOR REPERMIT
ST. LOUIS COUNTY REGIONAL LANDFILL
VIRGINIA, MINNESOTA

SCALE: AS SHOWN
PROJECT NO. 59124.00

EXISTING CONDITIONS PLAN

SHEET: 2 REV.
OF: 18

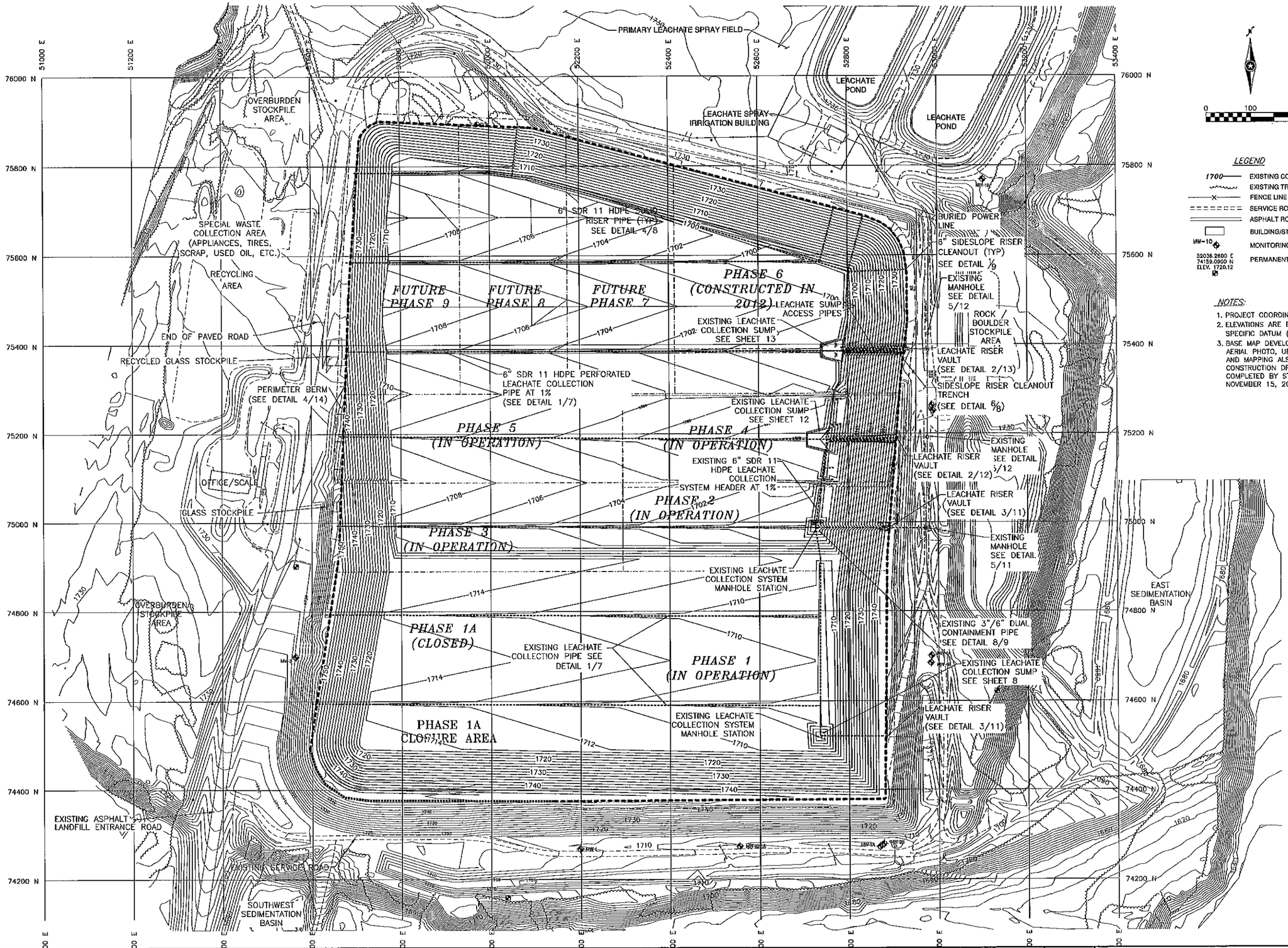

LEGEND

- 1700 — EXISTING CONTOUR
- EXISTING TREE LINE
- FENCE LINE
- SERVICE ROAD
- ASPHALT ROAD
- BUILDING/STRUCTURE
- MW-10 — MONITORING WELL
- 52036.2600 E, 74159.0900 N, ELEV. 1720.12 — PERMANENT CONTROL POINT

NOTES:

1. PROJECT COORDINATE GRID SHOWN.
2. ELEVATIONS ARE BASED ON PROJECT SPECIFIC DATUM (NOT U.S.G.S.)
3. BASE MAP DEVELOPED FROM NOVEMBER, 1994 AERIAL PHOTO, UPDATED WITH ANNUAL SURVEY AND MAPPING ALSO UPDATED WITH CONSTRUCTION DRAWINGS LAST SURVEY COMPLETED BY ST. LOUIS COUNTY ON NOVEMBER 15, 2011.

NO.	DATE	BY	REMARKS
4			
3			
2			
1			

DESIGNED	JB	DATE	JUNE 2013
DRAWN	MK	DATE	JUNE 2013
APPROVED	JB	DATE	JUNE 2013

I hereby certify that this plan, specification, or report was prepared by me or under my direct supervision and that I am a duly Licensed Professional Engineer under the laws of the State of Minnesota.

James C Berkes

Date 6-24-13 Reg. No. 44916

LIESCH
www.liesch.com
Hydrogeologists • Engineers • Environmental Scientists
Minneapolis • Los Angeles • Milwaukee • Phoenix

2013 APPLICATION FOR REPERMIT
ST. LOUIS COUNTY REGIONAL LANDFILL
VIRGINIA, MINNESOTA

SCALE: AS SHOWN
PROJECT NO. 59124.00

OVERALL BASEGRADE PLAN

SHEET: 3 OF: 18 REV.

MK 6-24-2013 I:\liesch projects\59124\cad\2013 repermit\sheet 3.dwg

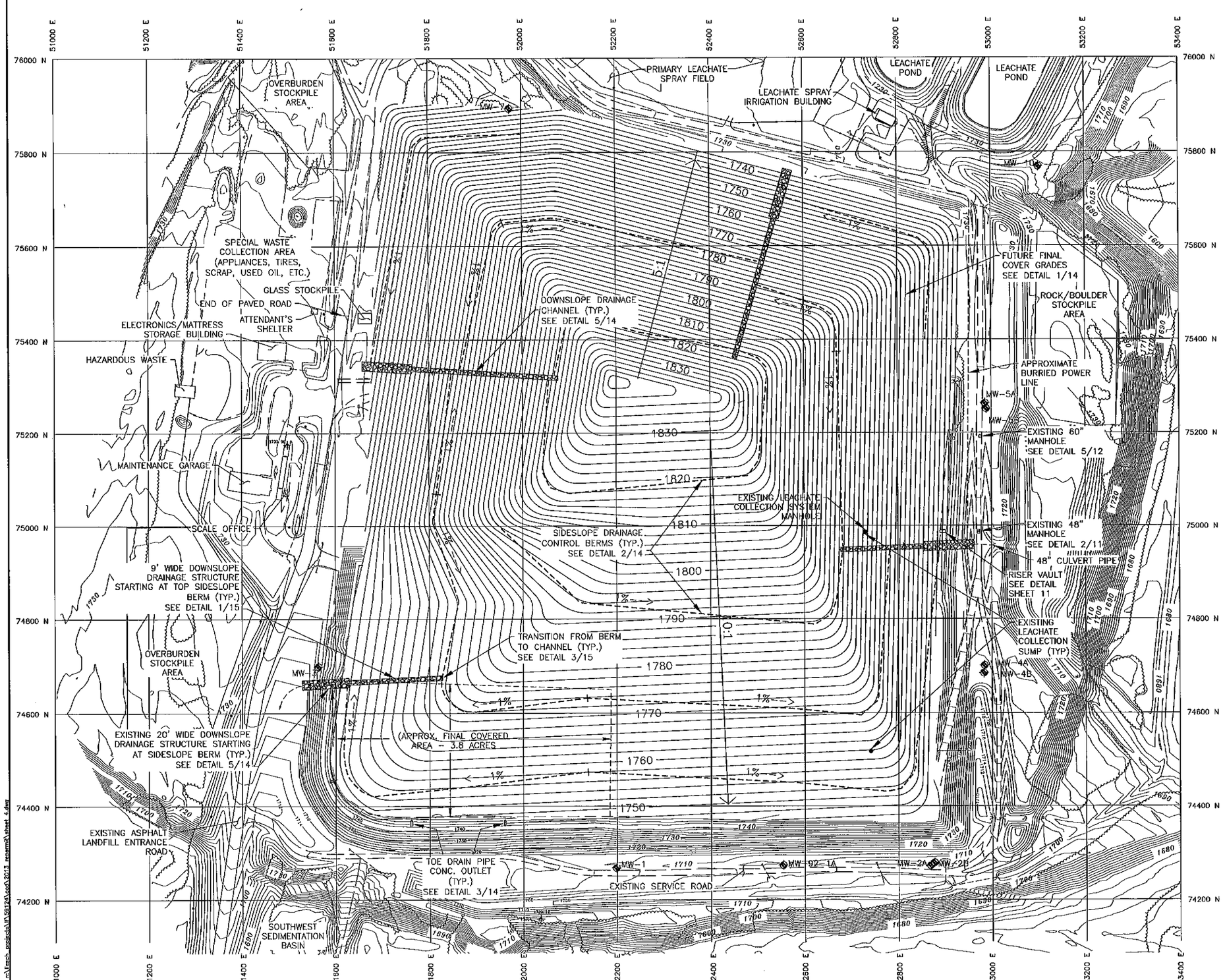

0 100 200

LEGEND

- 1700 EXISTING CONTOUR
- EXISTING TREE LINE
- FENCE LINE
- SERVICE ROAD
- ASPHALT ROAD
- BUILDING/STRUCTURE
- MW-10 MONITORING WELL
- 1830 FUTURE FINAL GRADES

NOTES:

1. PROJECT COORDINATE GRID SHOWN.
2. ELEVATIONS ARE BASED ON PROJECT SPECIFIC DATUM (NOT U.S.G.S.)
3. BASE MAP DEVELOPED FROM NOVEMBER, 1994 AERIAL PHOTO, UPDATED WITH ANNUAL SURVEY AND MAPPING ALSO UPDATED WITH CONSTRUCTION DRAWINGS LAST SURVEY COMPLETED BY ST. LOUIS COUNTY ON DECEMBER 5, 2006, AND AUGUST 8, 2007.
4. EXISTING CONTOURS LOCATIONS ARE ESTIMATED DRAWING SHOULD NOT BE USED FOR CONSTRUCTION QUANTITY TAKEOFFS. SURFACE SHOWING IN PLACE WASTE IS ACCURATE.

NO.	DATE	BY	REMARKS
4			
3			
2			
1			

DESIGNED	JB	DATE	JUNE 2013
DRAWN	MK	DATE	JUNE 2013
APPROVED	JB	DATE	JUNE 2013

I hereby certify that this plan, specification, or report was prepared by me or under my direct supervision and that I am a duly Licensed Professional Engineer under the laws of the State of Minnesota.

James C Berkes
Date 6-24-13 Reg. No. 44916

LIESCH
www.liesch.com
Hydrogeologists • Engineers • Environmental Scientists
Minneapolis • Los Angeles • Milwaukee • Phoenix

2013 APPLICATION FOR REPERMIT
ST. LOUIS COUNTY REGIONAL LANDFILL
VIRGINIA, MINNESOTA

SCALE: AS SHOWN
PROJECT NO. 59124.00

OVERALL FINAL COVER PLAN

SHEET: 4 OF: 18 REV.

MK 6-24-2013 1 = 1 n:\liesch_projects\ut\59124\acad\2013_repermit\sheet 4.dwg

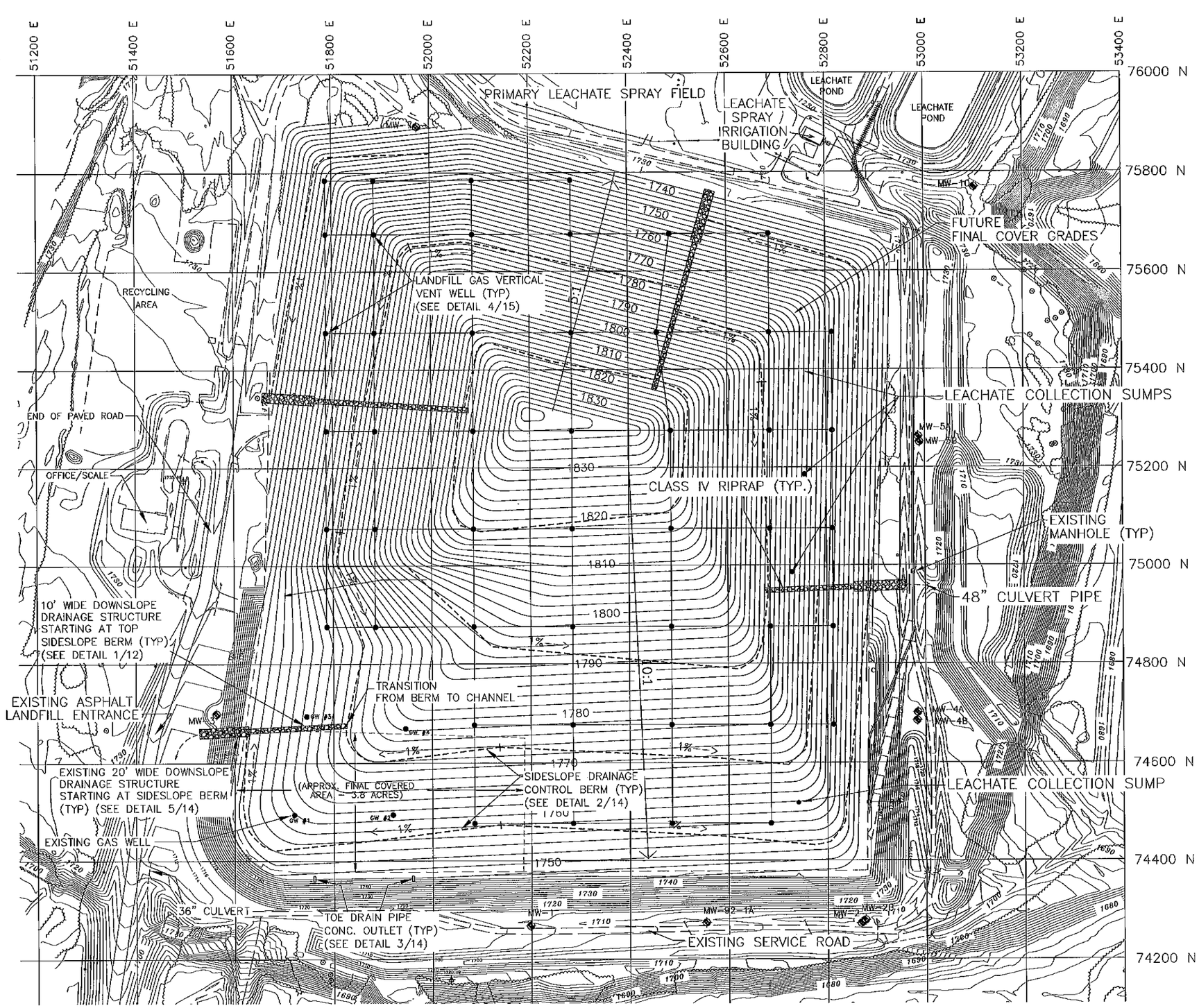

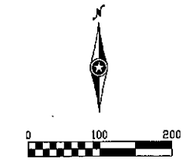

LEGEND

- 1700 — EXISTING CONTOUR
- EXISTING TREE LINE
- FENCE LINE
- SERVICE ROAD
- ASPHALT ROAD
- BUILDING/STRUCTURE
- MW-10 MONITORING WELL
- 1720 — FUTURE FINAL GRADES

NOTES:

1. COORDINATE GRID SHOWN IS PROJECT COORDINATE GRID.
2. ELEVATIONS ARE BASED ON PROJECT SPECIFIC DATUM (NOT U.S.G.S.)
3. BASE MAP DEVELOPED FROM NOVEMBER, 1994 AERIAL PHOTO, DECEMBER, 1997 FIELD SURVEY, DECEMBER 31, 2001 AND DECEMBER 2002 SURVEY BY NORTHERN LIGHTS SURVEYING AND MAPPING.

NO.	DATE	BY	REMARKS
4			
3			
2			
1			

DESIGNED	JB	DATE	JUNE 2013
DRAWN	MK	DATE	JUNE 2013
APPROVED	JB	DATE	JUNE 2013

I hereby certify that this plan, specification, or report was prepared by me or under my direct supervision and that I am a duly Licensed Professional Engineer under the laws of the State of Minnesota.

James C Berkey

Date 6-24-13 Reg. No. 44916

LIESCH
www.liesch.com
Hydrogeologists • Engineers • Environmental Scientists
Minneapolis • Los Angeles • Milwaukee • Phoenix

2013 APPLICATION FOR REPERMIT
ST. LOUIS COUNTY REGIONAL LANDFILL
VIRGINIA, MINNESOTA

SCALE: AS SHOWN
PROJECT NO. 59124.00

GAS COLLECTION SYSTEM PLAN

SHEET: 5 OF: 18
REV.

MK 6-24-2013 1 = 1 n:\liesch projects\59124\cad\2013 repermit\sheet 5.dwg

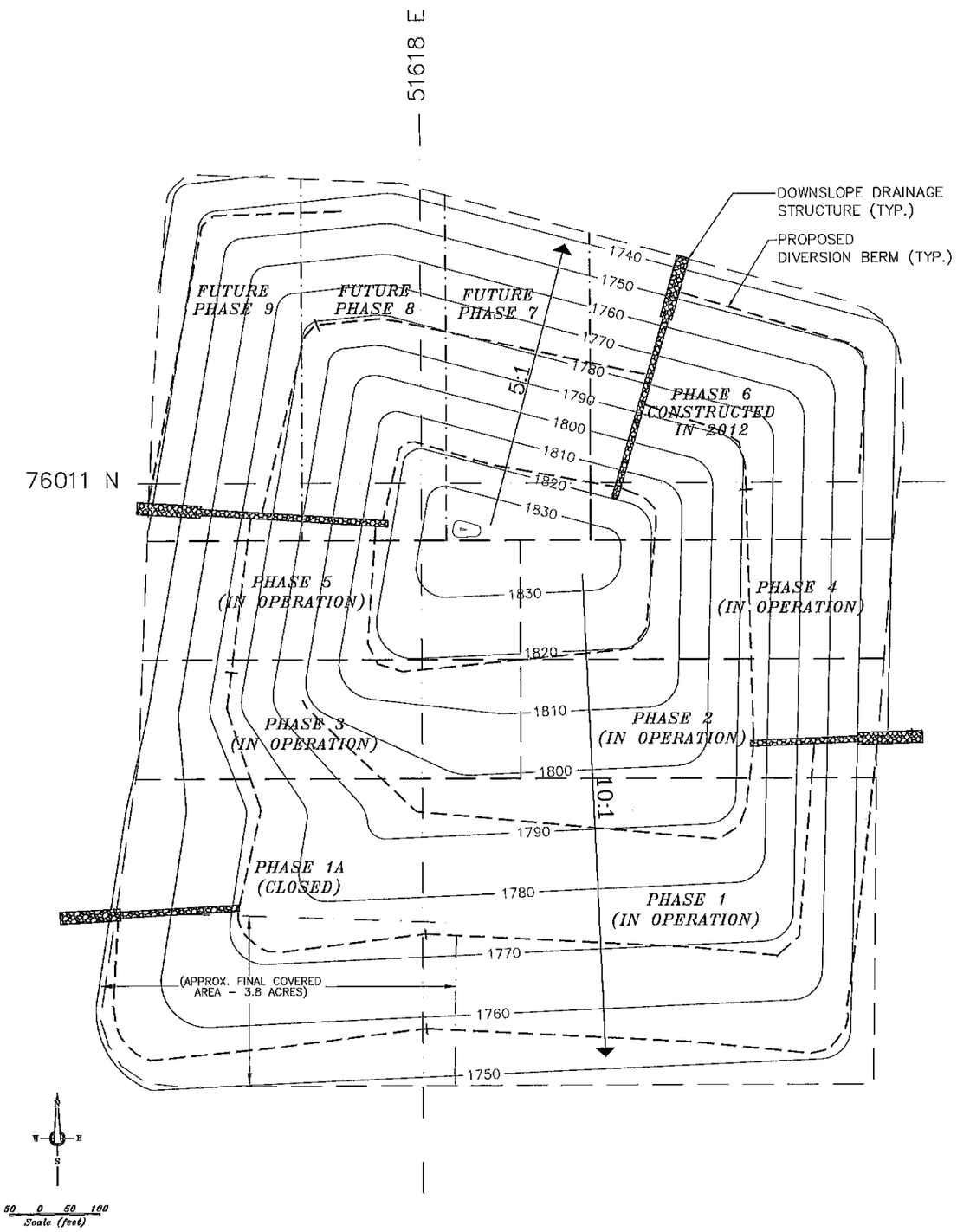

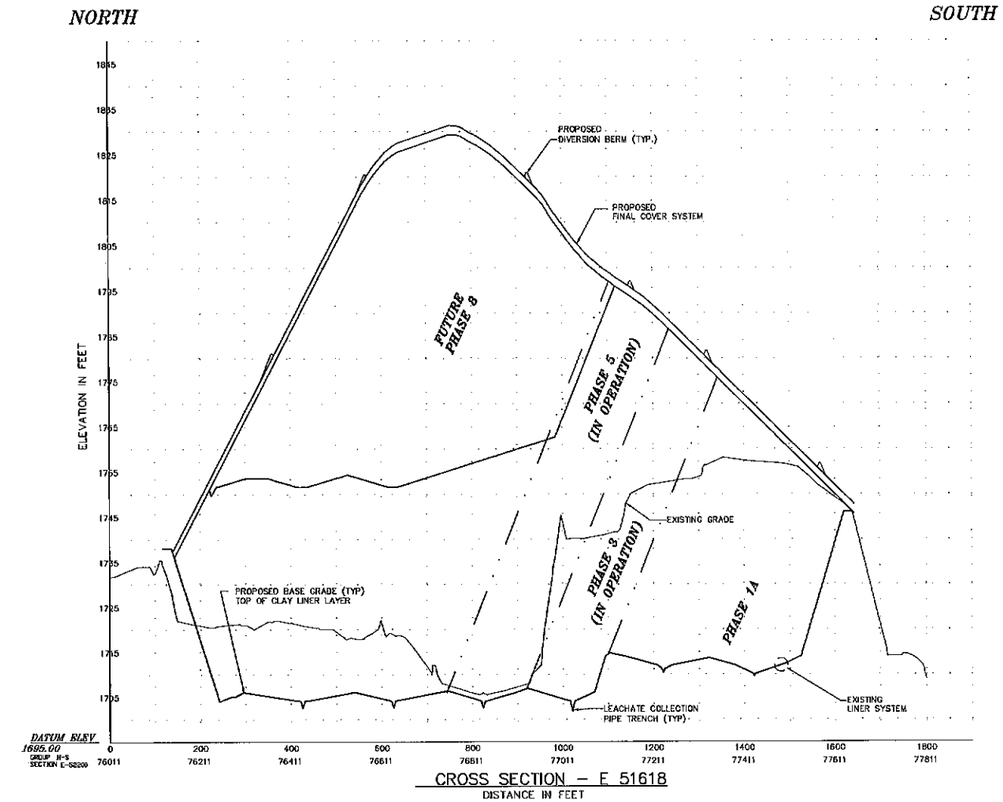

CROSS SECTION – E 51618

DISTANCE IN FEET

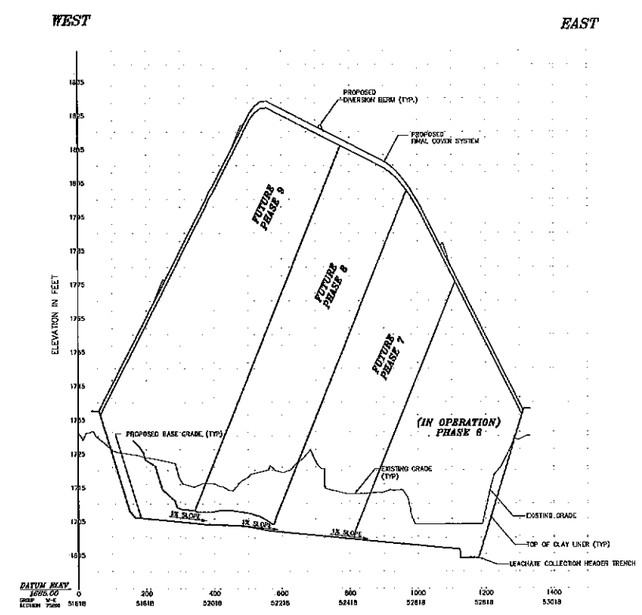

CROSS SECTION – N 76011

DISTANCE IN FEET

NO.	DATE	BY	REMARKS
4			
3			
2			
1			

DESIGNED	JB	DATE	JUNE 2013
DRAWN	MK	DATE	JUNE 2013
APPROVED	JB	DATE	JUNE 2013

I hereby certify that this plan, specification, or report was prepared by me or under my direct supervision and that I am a duly Licensed Professional Engineer under the laws of the State of Minnesota.

James C Berkas

Date 6-24-13 Reg. No. 44916

LIESCH www.liesch.com

Hydrogeologists • Engineers • Environmental Scientists

Minneapolis • Los Angeles • Milwaukee • Phoenix

2013 APPLICATION FOR REPERMIT

ST. LOUIS COUNTY REGIONAL LANDFILL

VIRGINIA, MINNESOTA

SCALE: AS SHOWN

PROJECT NO. 59124.00

CROSS SECTIONS

SHEET 6 OF 18

REV.

MK 6-24-2013 n:\liesch_projects\h59124\cad\2013_repermit\sheet 6.dwg

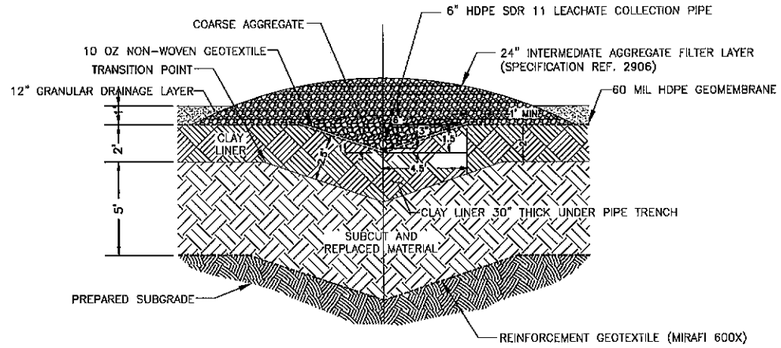

LINER/COLLECTION PIPE TRENCH SECTION (1/7)
NO SCALE

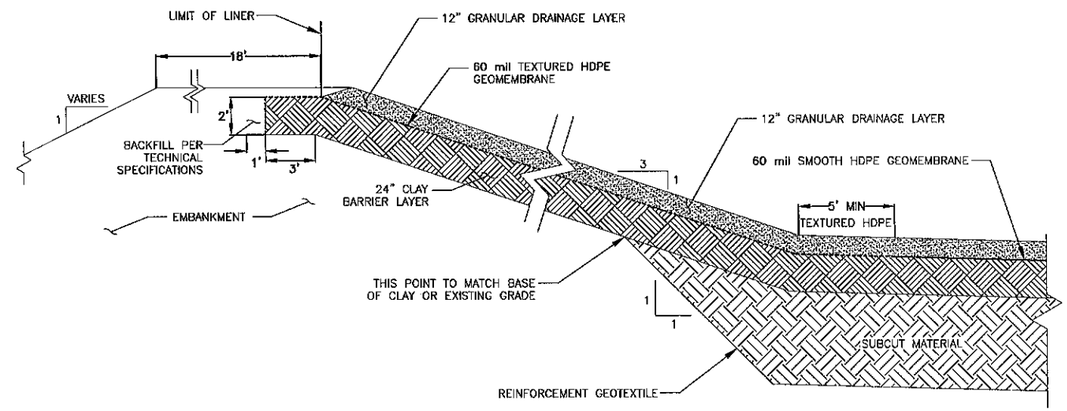

TYPICAL LANDFILL PERIMETER BERM SECTION (2/7)
NO SCALE

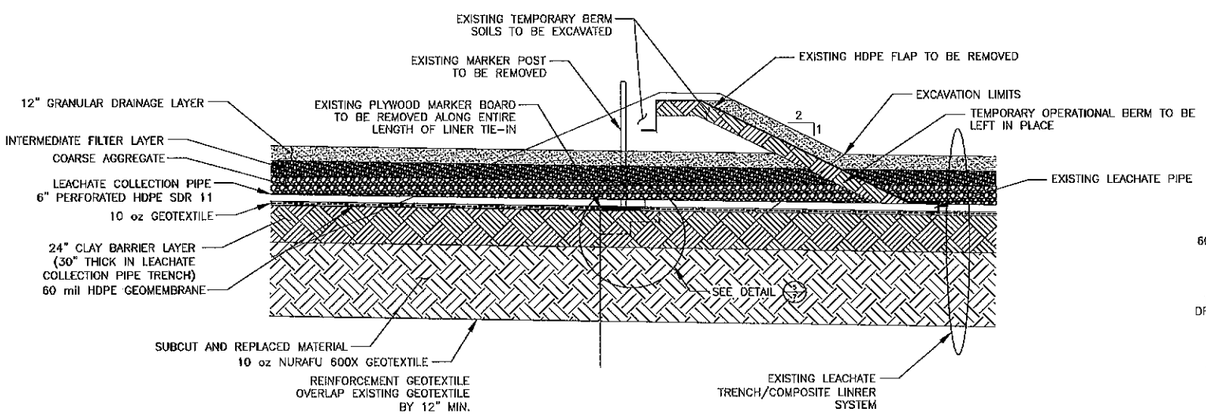

TRANSITION TO NEW COMPOSITE LINER DETAIL (3/7)
NO SCALE

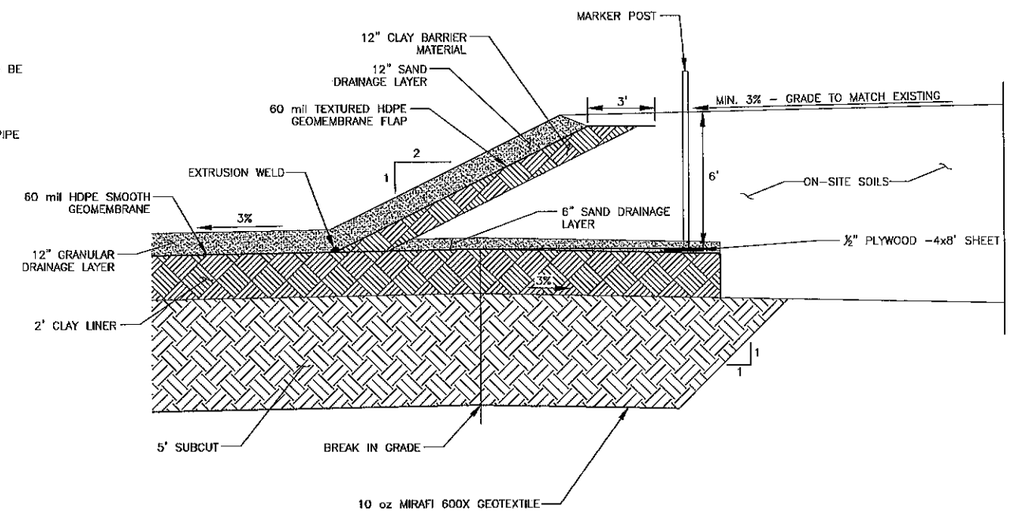

TEMPORARY BERM DETAIL (4/7)
NO SCALE

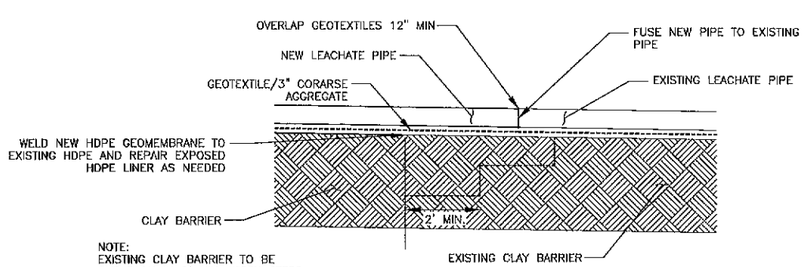

NOTE:
EXISTING CLAY BARRIER TO BE CUT BACK IN 2' MIN. WIDTH STEPS AND RECOMPACTED WITH NEW CLAY BARRIER MATERIAL IN 8" LIFTS

CLAY BARRIER LAYER TIE-IN DETAIL (5/7)
NO SCALE

NO.	DATE	BY	REMARKS
4			
3			
2			
1			

DESIGNED	JB	DATE	JUNE 2013
DRAWN	MK	DATE	JUNE 2013
APPROVED	JB	DATE	JUNE 2013

I hereby certify that this plan, specification, or report was prepared by me or under my direct supervision and that I am a duly Licensed Professional Engineer under the laws of the State of Minnesota.
James C Berkos
Date 6-24-13 Reg. No. 44916

LIESCH www.liesch.com
Hydrogeologists • Engineers • Environmental Scientists
Minneapolis • Los Angeles • Milwaukee • Phoenix

2013 APPLICATION FOR REPERMIT
ST. LOUIS COUNTY REGIONAL LANDFILL
VIRGINIA, MINNESOTA

SCALE: AS SHOWN
PROJECT NO. 59124.00

LINER SYSTEM DETAILS

SHEET: 7 OF: 18 REV.

MK 6-24-2013 1 = 1 m:\liesch_projects\A\59124\acad\2013 repermit\sheet 7.dwg

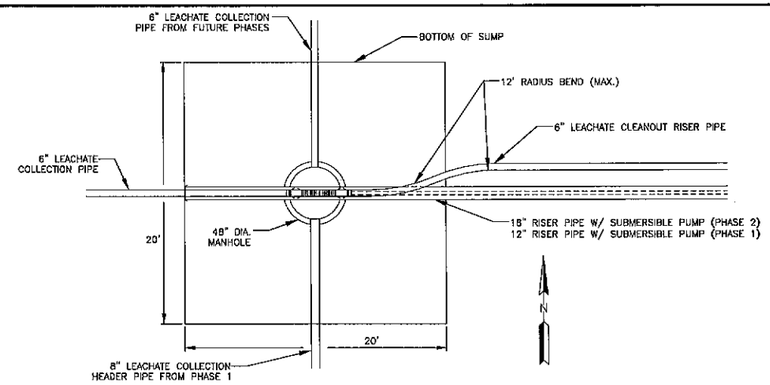

LEACHATE COLLECTION SUMP PLAN – SCHEMATIC (1/8)
NOT TO SCALE

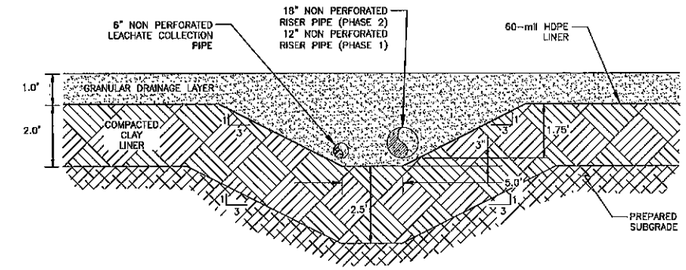

CLEANOUT TRENCH SECTION A–A (2/8)
NOT TO SCALE

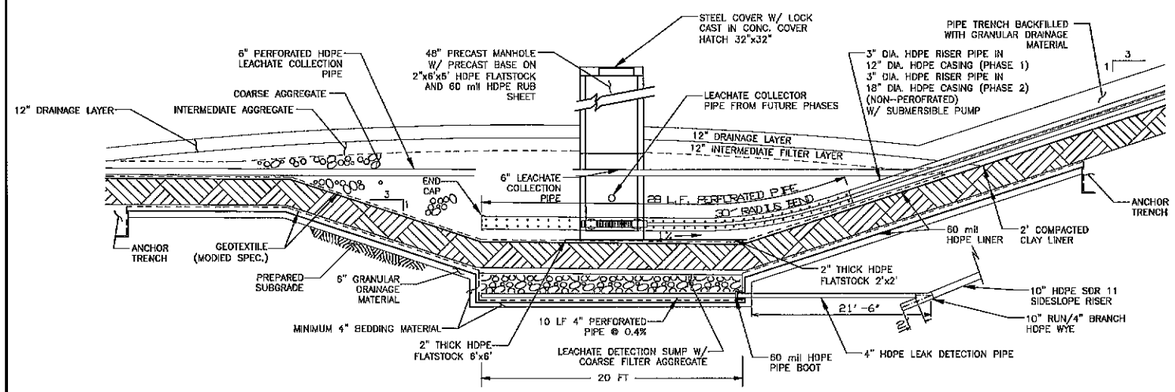

LEACHATE COLLECTION SUMP WEST TO EAST SECTION (3/8)
NOT TO SCALE

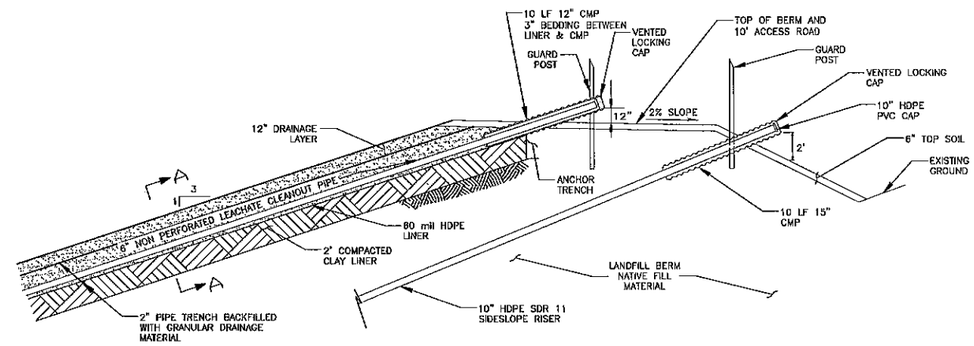

SECTION THRU CLEANOUT RISER (4/8)
NOT TO SCALE

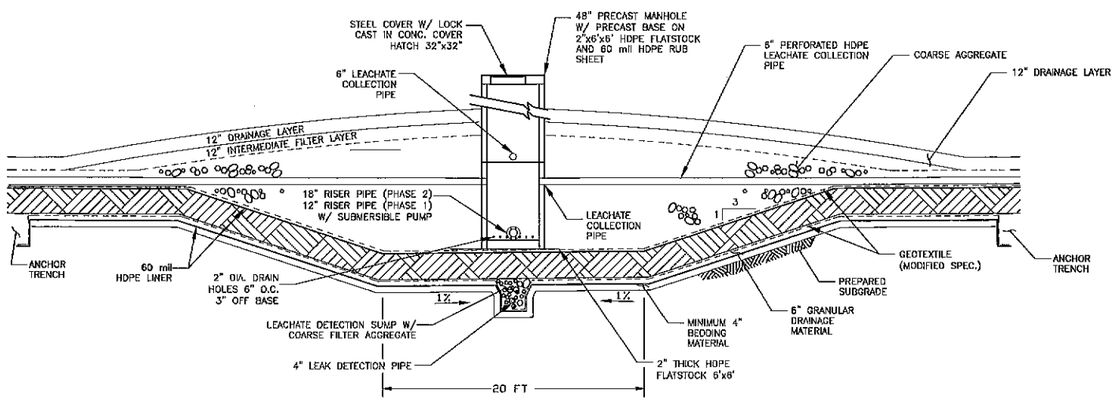

LEACHATE COLLECTION SUMP NORTH TO SOUTH SECTION (5/8)
NOT TO SCALE

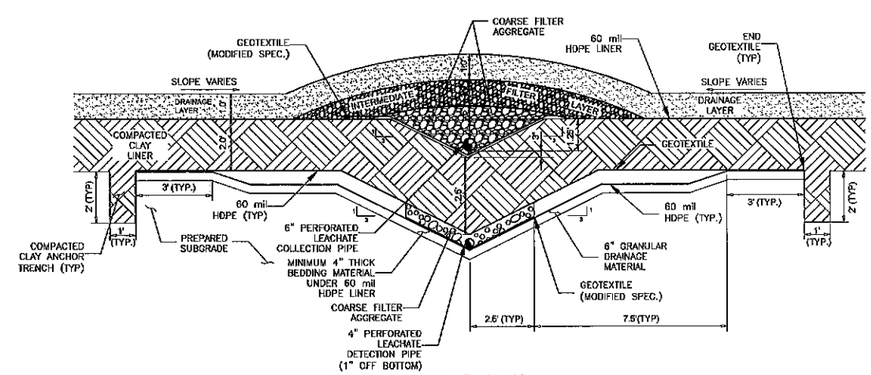

LANDFILL LEAK DETECTION TRENCH DETAIL (6/8)
NOT TO SCALE

NO.	DATE	BY	REMARKS
4			
3			
2			
1			

DESIGNED JB	DATE JUNE 2013	
DRAWN MK	DATE JUNE 2013	
APPROVED JB	DATE JUNE 2013	

I hereby certify that this plan, specification, or report was prepared by me or under my direct supervision and that I am a duly Licensed Professional Engineer under the laws of the State of Minnesota.
James C. Berkas
Date 6-24-13 Reg. No. 44916

LIESCH
www.liesch.com
Hydrogeologists • Engineers • Environmental Scientists
Minneapolis • Los Angeles • Milwaukee • Phoenix

2013 APPLICATION FOR REPERMIT
ST. LOUIS COUNTY REGIONAL LANDFILL
VIRGINIA, MINNESOTA

SCALE: AS SHOWN
PROJECT NO. 59124.00

PHASE 1 AND PHASE 2
LEACHATE COLLECTION SYSTEM DETAILS

SHEET: 8 OF: 18
REV.

MK 6-24-2013 1 = 1 n:\liesch-projects\f\59124\cad\2013 repermit\sheet 8.dwg

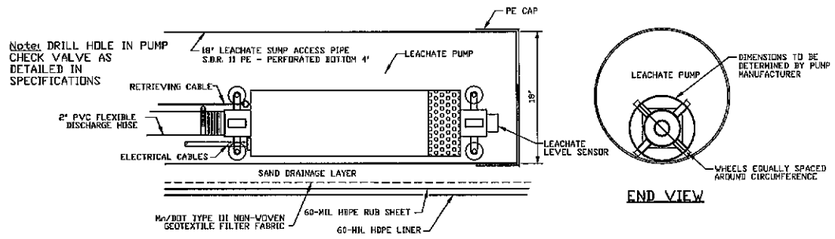

1/9 LEACHATE COLLECTION PUMP DETAIL
SCALE: NONE

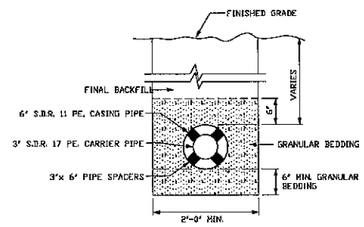

8/9 TRANSMISSION HEADER PIPE TRENCH
SCALE: NONE

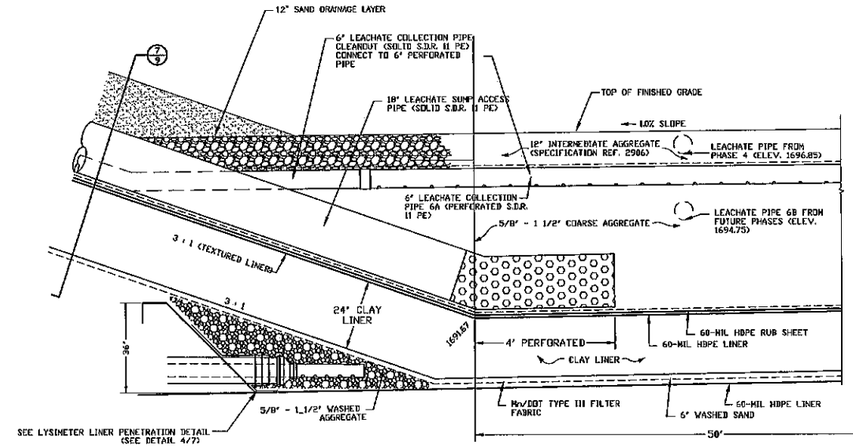

2/9 LEACHATE COLLECTION SUMP/LYSIMETER SECTION
SCALE: NONE

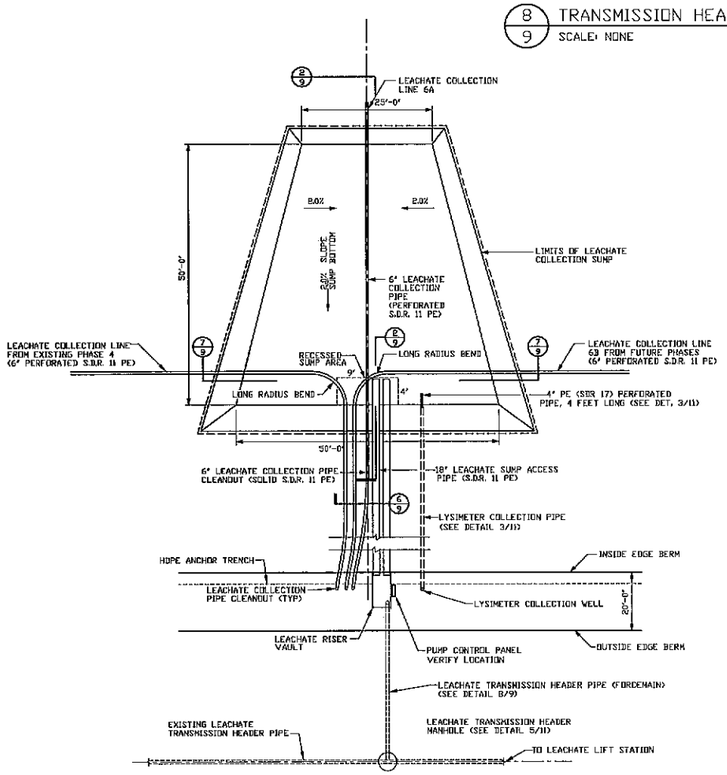

3/9 LEACHATE COLLECTION SUMP DETAIL
SCALE: NONE

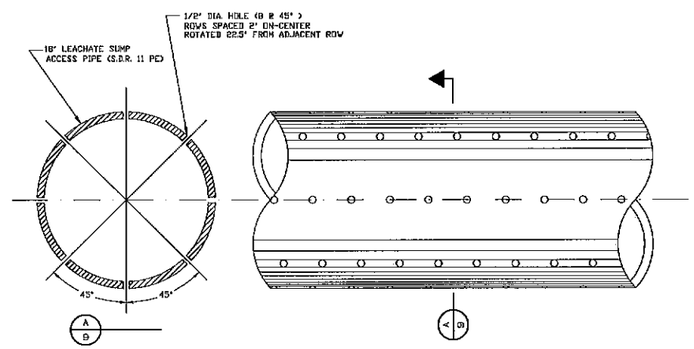

4/9 18" SUMP ACCESS PIPE PERFORATION DETAIL
SCALE: NONE

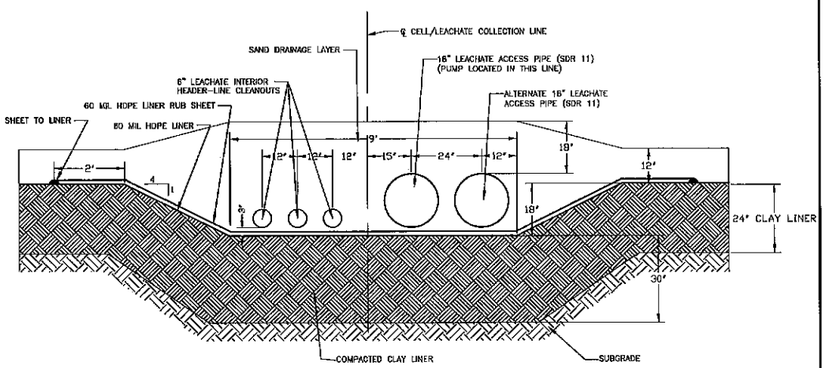

6/9 SIDESLOPE RISER CLEANOUT TRENCH SECTION A-A
SCALE: NONE

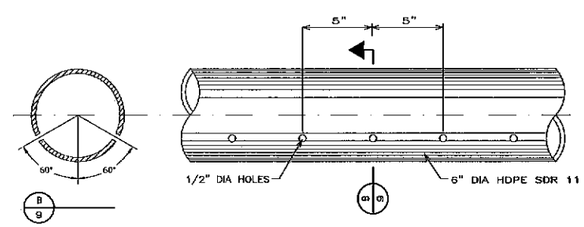

5/9 6" LEACHATE COLLECTION PIPE PERFORATION DETAIL
SCALE: NONE

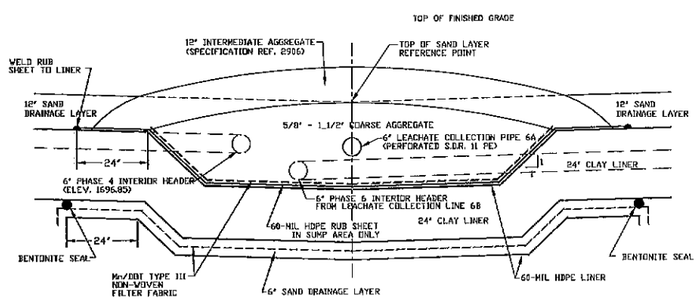

7/9 LEACHATE COLLECTION SUMP SECTION
SCALE: NONE

NO.	DATE	BY	REMARKS
4			
3			
2			
1			

DESIGNED	JB	DATE	JUNE 2013
DRAWN	MK	DATE	JUNE 2013
APPROVED	JB	DATE	JUNE 2013

I hereby certify that this plan, specification, or report was prepared by me or under my direct supervision and that I am a duly Licensed Professional Engineer under the laws of the State of Minnesota.
James C Berkes
Date 6-24-13 Reg. No. 44916

LIESCH
www.liesch.com
Hydrogeologists • Engineers • Environmental Scientists
Minneapolis • Los Angeles • Milwaukee • Phoenix

2013 APPLICATION FOR REPERMIT
ST. LOUIS COUNTY REGIONAL LANDFILL
VIRGINIA, MINNESOTA

SCALE: AS SHOWN
PROJECT NO. 59124.00

PHASE 4
LEACHATE COLLECTION SYSTEM DETAILS

SHEET: 9 OF: 18
REV.

VIC 6-24-2013 1 = n:\liesch_projects\IN\59124\cad\2013_repermit\sheet 9.dwg

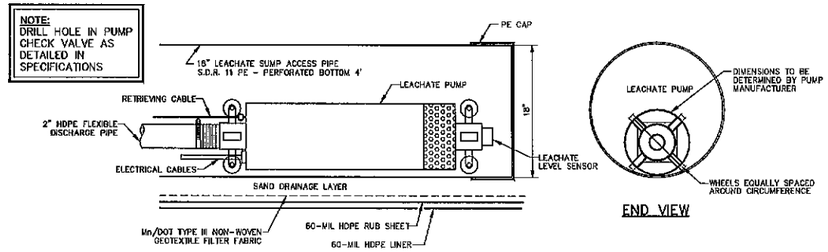

1/10 LEACHATE COLLECTION PUMP DETAIL
SCALE: NONE

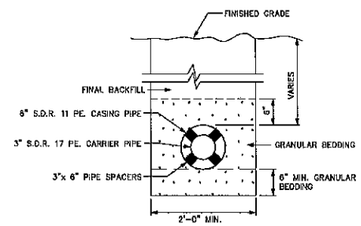

8/10 TRANSMISSION HEADER PIPE TRENCH
SCALE: NONE

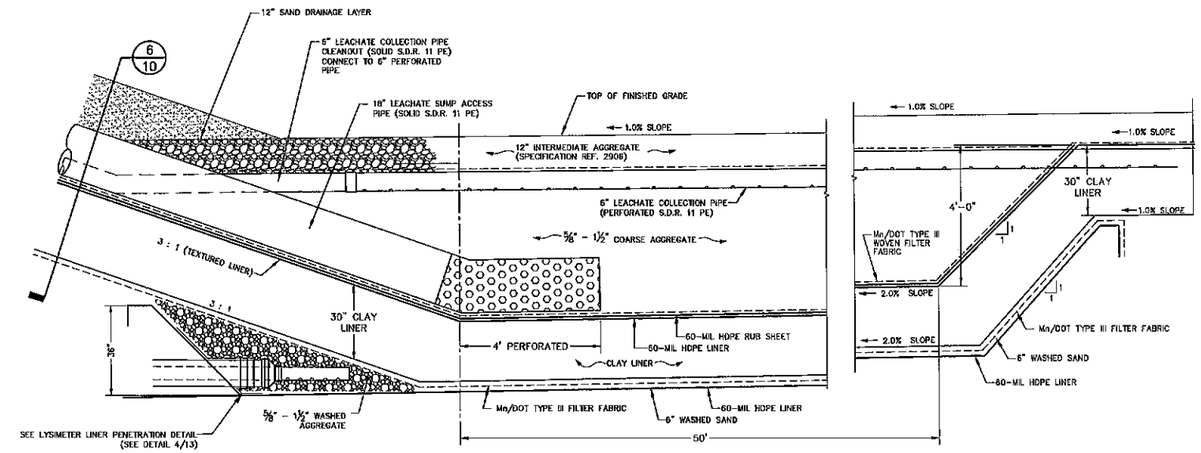

2/10 LEACHATE COLLECTION SUMP/LYSIMETER SECTION
SCALE: NONE

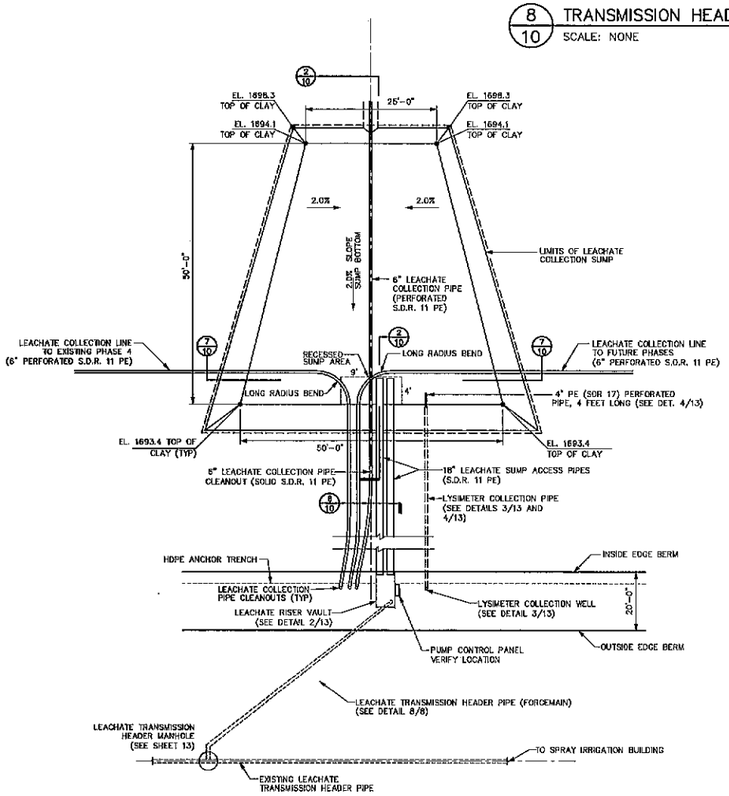

3/10 LEACHATE COLLECTION SUMP DETAIL
SCALE: NONE

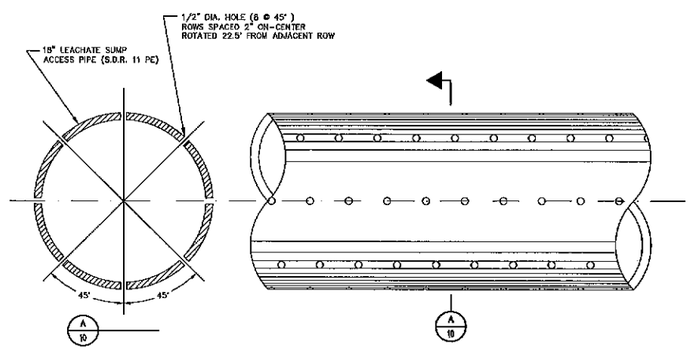

4/10 18" SUMP ACCESS PIPE PERFORATION DETAIL
SCALE: NONE

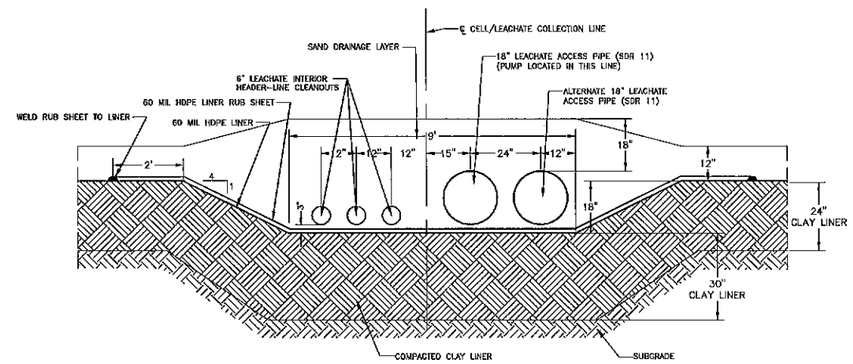

6/10 SIDESLOPE RISER CLEANOUT TRENCH SECTION
SCALE: NONE

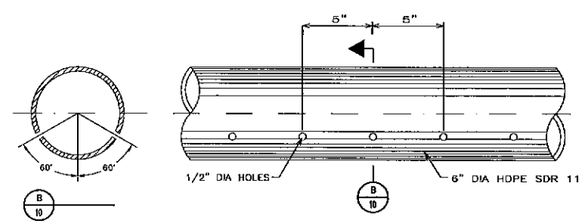

5/10 6" LEACHATE COLLECTION PIPE PERFORATION DETAIL
SCALE: NONE

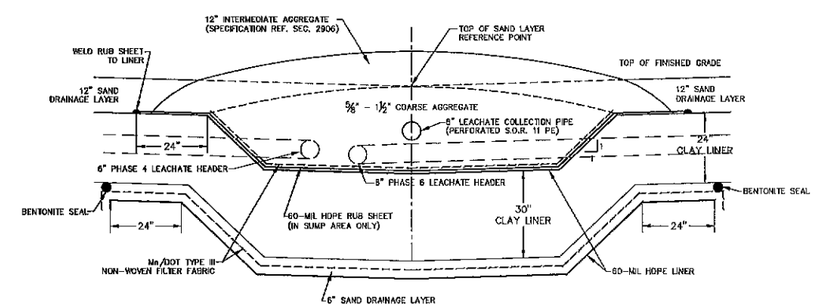

7/10 LEACHATE COLLECTION SUMP SECTION
SCALE: NONE

NO.	DATE	BY	REMARKS
4			
3			
2			
1			

DESIGNED	JB	DATE	JUNE 2013
DRAWN	MK	DATE	JUNE 2013
APPROVED	JB	DATE	JUNE 2013

I hereby certify that this plan, specification, or report was prepared by me or under my direct supervision and that I am a duly Licensed Professional Engineer under the laws of the State of Minnesota.
James C Berkos
Date 6-24-13 Reg. No. 44916

LIESCH
www.liesch.com
Hydrogeologists • Engineers • Environmental Scientists
Minneapolis • Los Angeles • Milwaukee • Phoenix

2013 APPLICATION FOR REPERMIT
ST. LOUIS COUNTY REGIONAL LANDFILL
VIRGINIA, MINNESOTA

SCALE: AS SHOWN
PROJECT NO. 59124.00

PHASE 6
LEACHATE COLLECTION SYSTEM DETAILS

SHEET: 10 OF: 18
REV.

MK 6-24-2013 1 = 1 n:\liesch_projects\01-59124\cad\2013 repermit\sheet 10.dwg

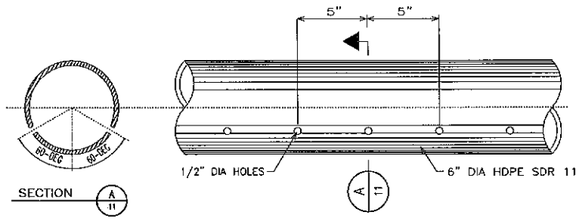

LEACHATE COLLECTION PIPE PERFORATION DETAIL 1/11

NOT TO SCALE

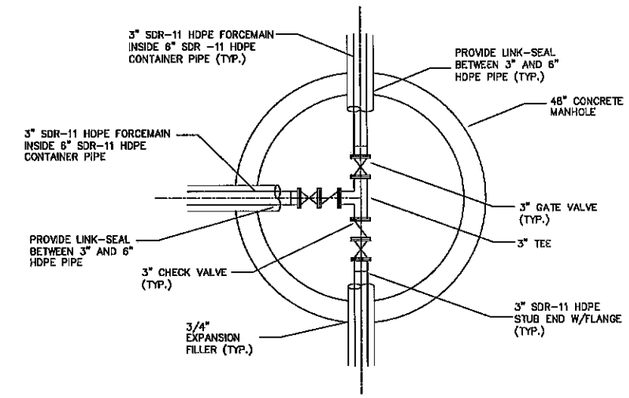

MANHOLE SECTION DETAIL 2/11

NOT TO SCALE

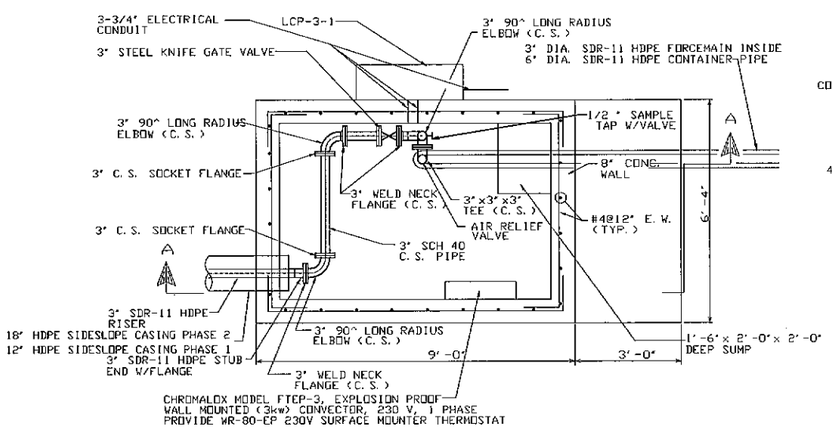

PLAN VIEW

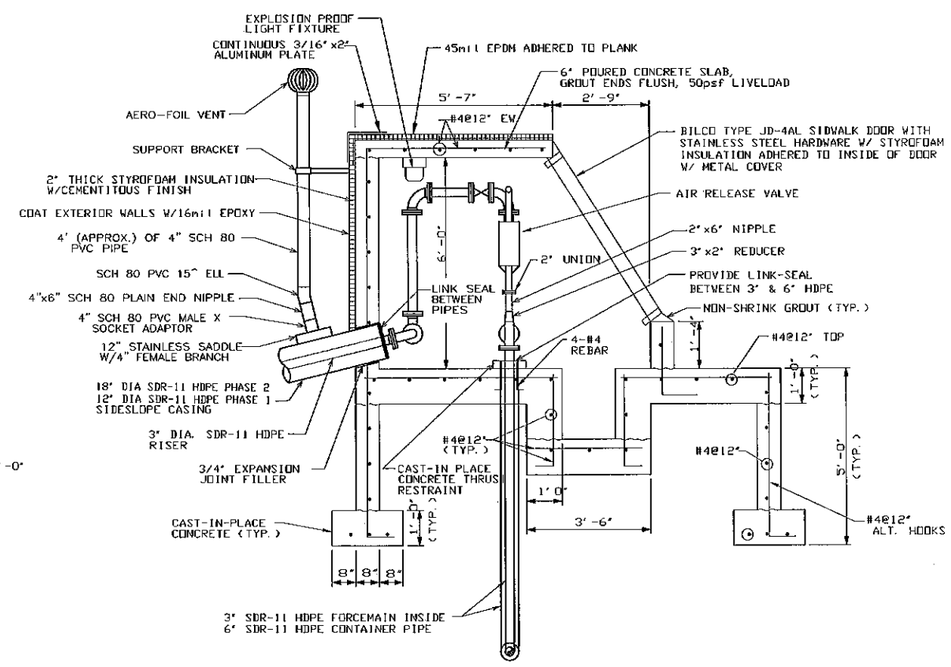

RISER VAULT STRUCTURE – PLAN VIEW 3/11

NOT TO SCALE

SECTION A–A

NO.	DATE	BY	REMARKS
4			
3			
2			
1			

DESIGNED	JB	DATE JUNE 2013
DRAWN	MK	DATE JUNE 2013
APPROVED	JB	DATE JUNE 2013

I hereby certify that this plan, specification, or report was prepared by me or under my direct supervision and that I am a duly Licensed Professional Engineer under the laws of the State of Minnesota.

James C Berkas

Date 6-24-13 Reg. No. 44916

LIESCH www.liesch.com

Hydrogeologists • Engineers • Environmental Scientists

Minneapolis • Los Angeles • Milwaukee • Phoenix

2013 APPLICATION FOR REPERMIT

ST. LOUIS COUNTY REGIONAL LANDFILL

VIRGINIA, MINNESOTA

SCALE: AS SHOWN

PROJECT NO. 59124.00

PHASE 1 AND PHASE 2 LEACHATE COLLECTION SYSTEM DETAILS

SHEET: 11 OF: 18

REV.

MK 6-24-2013 I:\n:\liesch projects\A59124\cad\2013 repermit\sheet 11.dwg

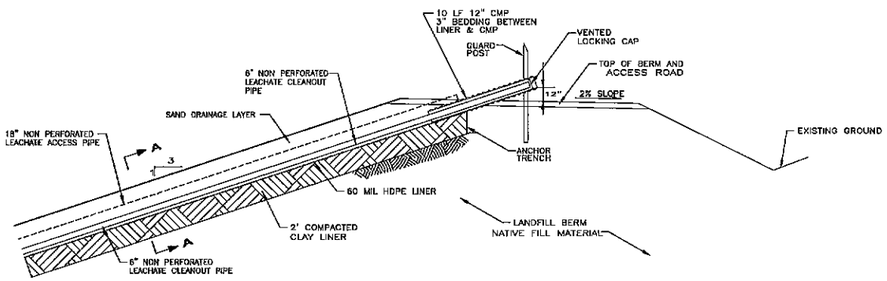

1/12 SIDESLOPE RISER TRENCH FROM SUMP
SCALE: NONE

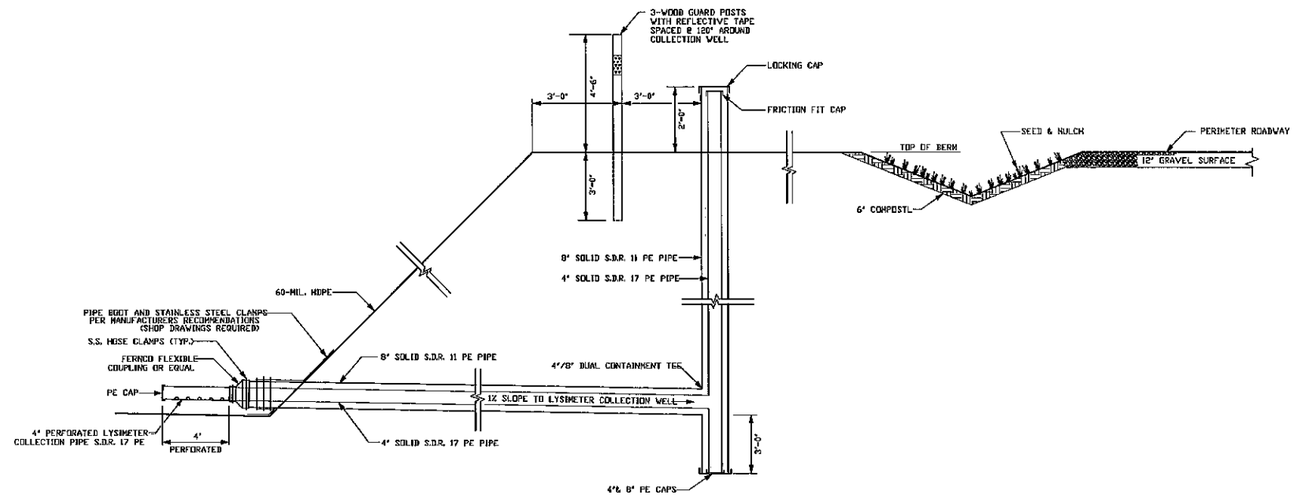

4/12 LYSIMETER LINER PENETRATION DETAIL
SCALE: NONE

3/12 LEACHATE LYSIMETER COLLECTION WELL
SCALE: NONE

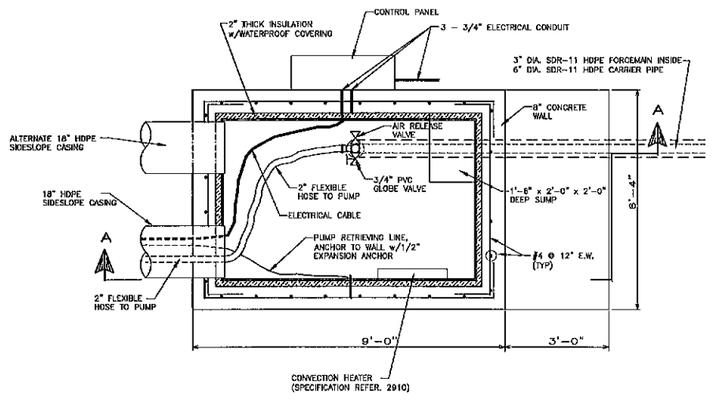

PLAN VIEW

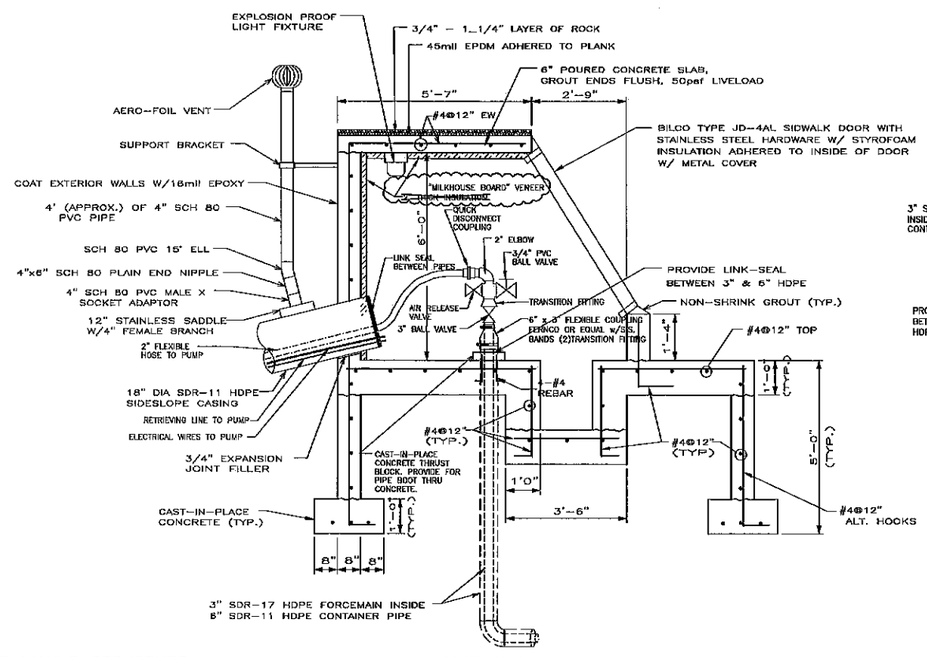

2/12 RISER VAULT STRUCTURE
SCALE: NONE

SECTION A-A

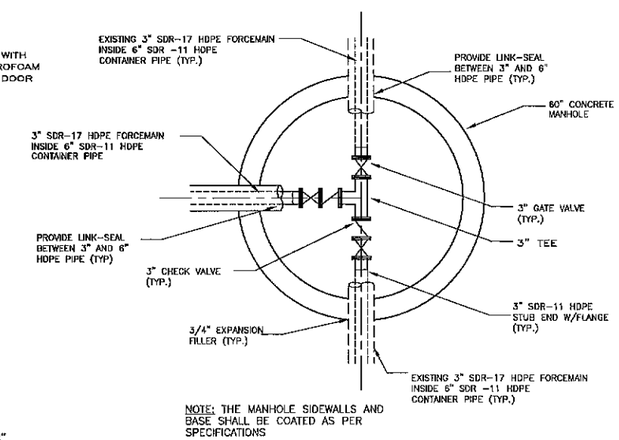

NOTE: THE MANHOLE SIDEWALLS AND BASE SHALL BE COATED AS PER SPECIFICATIONS

5/12 MANHOLE SECTION DETAIL
SCALE: NONE

NO.	DATE	BY	REMARKS
4			
3			
2			
1			

DESIGNED	JB	DATE	JUNE 2013
DRAWN	MK	DATE	JUNE 2013
APPROVED	JB	DATE	JUNE 2013

I hereby certify that this plan, specification, or report was prepared by me or under my direct supervision and that I am a duly Licensed Professional Engineer under the laws of the State of Minnesota.
James C. Berkas
Date 6-24-13 Reg. No. 44916

LIESCH
www.liesch.com
Hydrogeologists • Engineers • Environmental Scientists
Minneapolis • Los Angeles • Milwaukee • Phoenix

2013 APPLICATION FOR REPERMIT
ST. LOUIS COUNTY REGIONAL LANDFILL
VIRGINIA, MINNESOTA

SCALE: AS SHOWN
PROJECT NO. 59124.00

PHASE 4
LEACHATE COLLECTION SYSTEM DETAILS

SHEET: 12 REV.
OF 18

MK 6-24-2013 1 = 1 m:\liesch_projects\MN\59124\cad\2013 resermit\sheet 12.dwg

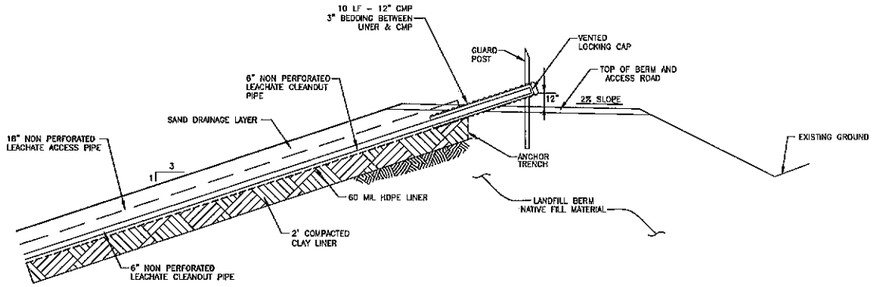

1/13 SIDESLOPE RISER PIPE TRENCH (TYPICAL)
SCALE: NONE

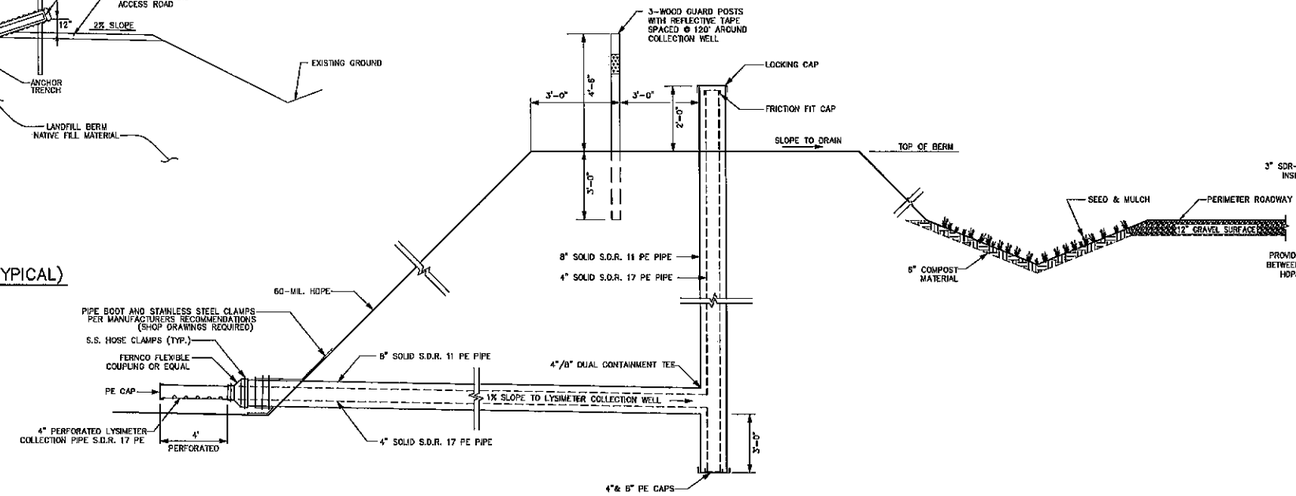

4/13 LYSIMETER LINER PENETRATION DETAIL
SCALE: NONE

3/13 LEACHATE LYSIMETER COLLECTION WELL
SCALE: NONE

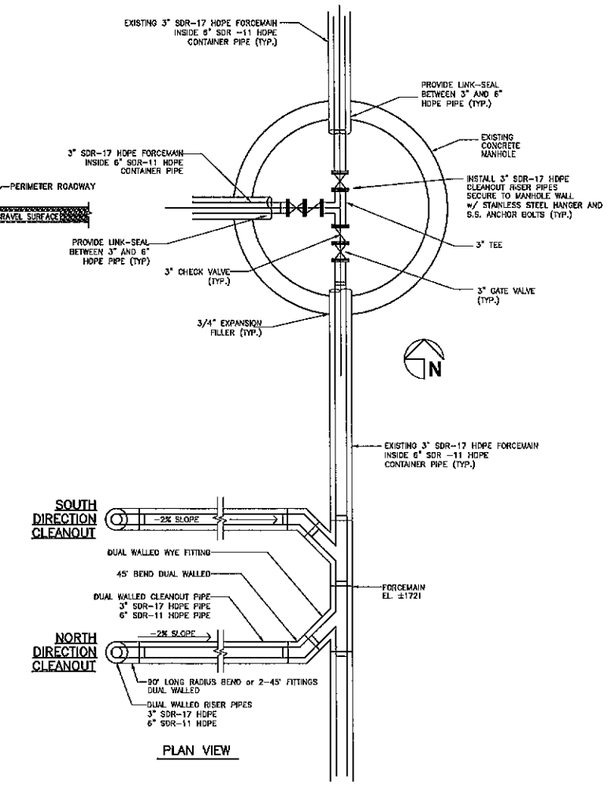

5/13 EXTERIOR FORCEMAIN CLEANOUTS
SCALE: NONE

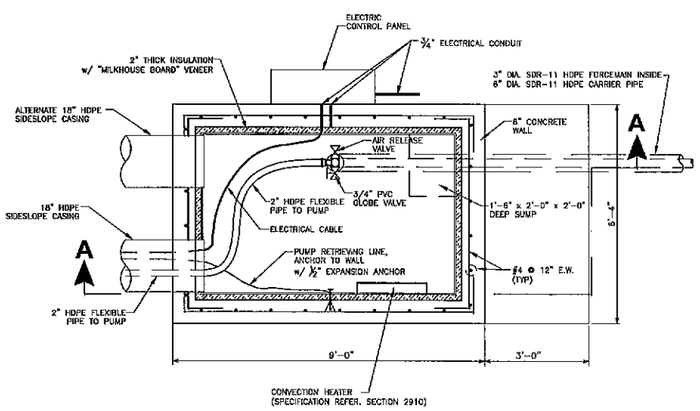

PLAN VIEW

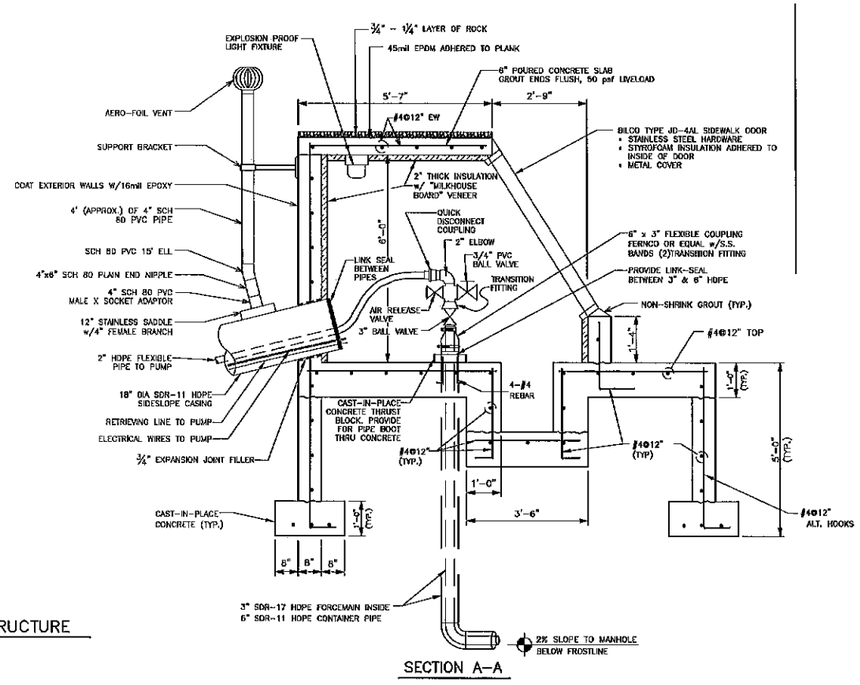

SECTION A-A

2/13 RISER VAULT STRUCTURE
SCALE: NONE

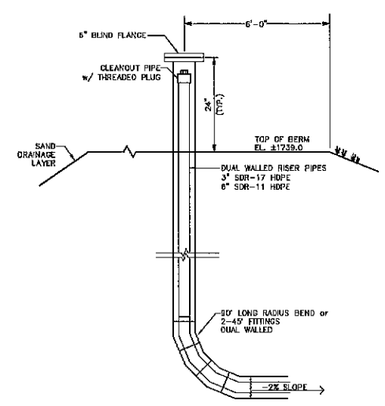

SECTION VIEW

NO.	DATE	BY	REMARKS
4			
3			
2			
1			

DESIGNED	JB	DATE	JUNE 2013
DRAWN	MK	DATE	JUNE 2013
APPROVED	JB	DATE	JUNE 2013

I hereby certify that this plan, specification, or report was prepared by me or under my direct supervision and that I am a duly Licensed Professional Engineer under the laws of the State of Minnesota.
James C Berkos
Date 6-24-13 Reg. No. 44916

LIESCH
www.liesch.com
Hydrogeologists • Engineers • Environmental Scientists
Minneapolis • Los Angeles • Milwaukee • Phoenix

2013 APPLICATION FOR REPERMIT
ST. LOUIS COUNTY REGIONAL LANDFILL
VIRGINIA, MINNESOTA

SCALE: AS SHOWN
PROJECT NO. 59124.00

PHASE 6
LEACHATE COLLECTION SYSTEM DETAILS

SHEET: 13 REV.
OF: 18

JMK 6-24-2013 = m:\liesch_projects\IA\59124\cad\2013_repermit\sheet 13.dwg

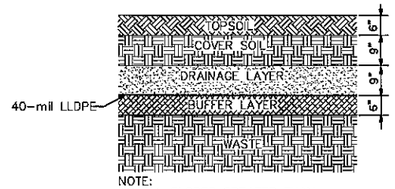

NOTE:
ON ALL SLOPES GREATER THAN
10:1 40-mil VFPE SHALL BE TEXTURED

FINAL COVER SECTION (TYPICAL) 1/14

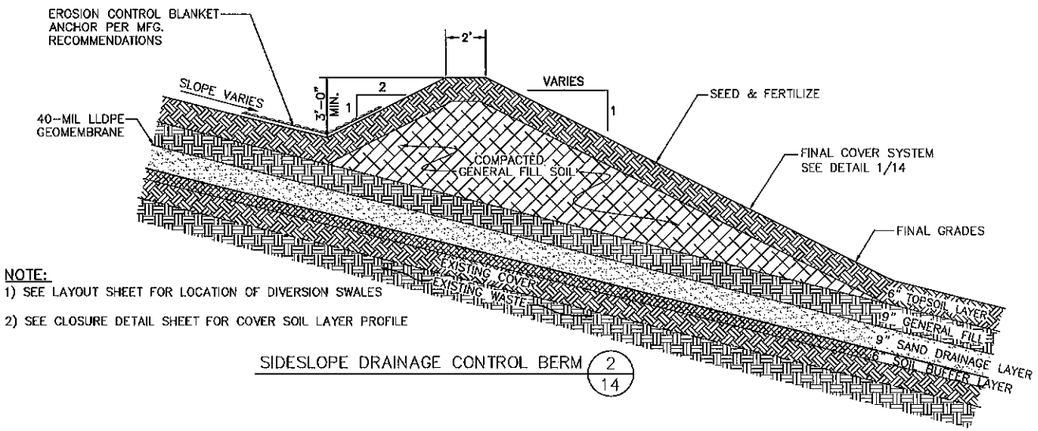

NOTE:
1) SEE LAYOUT SHEET FOR LOCATION OF DIVERSION SWALES
2) SEE CLOSURE DETAIL SHEET FOR COVER SOIL LAYER PROFILE

SIDESLOPE DRAINAGE CONTROL BERM 2/14

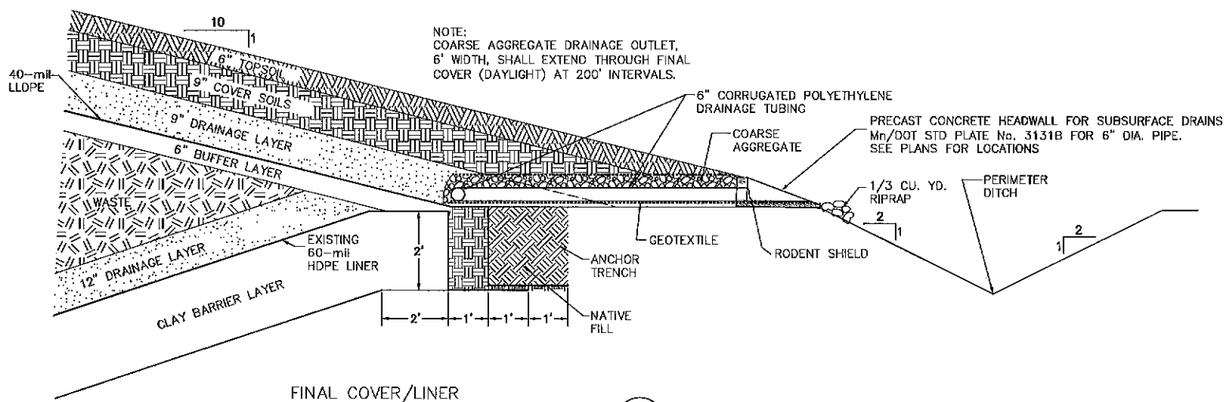

NOTE:
COARSE AGGREGATE DRAINAGE OUTLET,
6' WIDTH, SHALL EXTEND THROUGH FINAL
COVER (DAYLIGHT) AT 200' INTERVALS.

FINAL COVER/LINER
INTERSECTION DETAIL 3/14

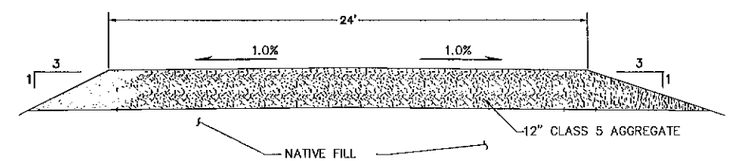

ACCESS ROAD SECTION 4/14

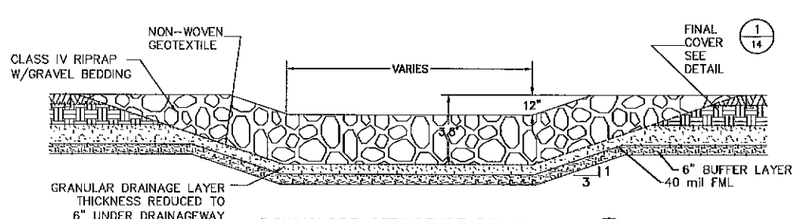

DOWNSLOPE STRUCTURE DETAIL 5/14

NO.	DATE	BY	REMARKS
4			
3			
2			
1			

DESIGNED JB	DATE JUNE 2013	I hereby certify that this plan, specification, or report was prepared by me or under my direct supervision and that I am a duly Licensed Professional Engineer under the laws of the State of Minnesota. James C Berkes Date 6-24-13 Reg. No. 44916
DRAWN MK	DATE JUNE 2013	
APPROVED JB	DATE JUNE 2013	

LIESCH www.liesch.com
Hydrogeologists • Engineers • Environmental Scientists
Minneapolis • Los Angeles • Milwaukee • Phoenix

2013 APPLICATION FOR REPERMIT
ST. LOUIS COUNTY REGIONAL LANDFILL
VIRGINIA, MINNESOTA

SCALE: AS SHOWN
PROJECT NO. 59124.00

CLOSURE DETAILS

SHEET: 14 REV.
OF: 18

MK 6-24-2013 1 = 1 m:\dwgs_projects\n\59124\cad\2013_repermit\sheet_14.dwg

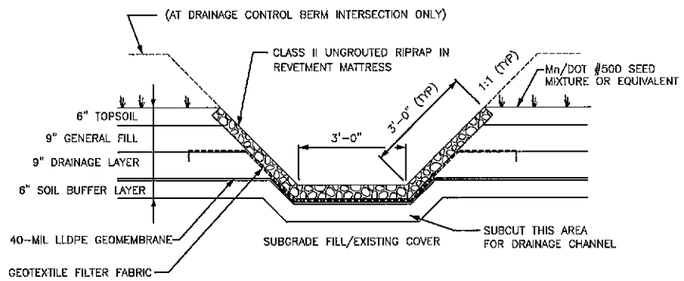

DOWNSLOPE DRAINAGE CHANNEL (1/15)
NOT TO SCALE

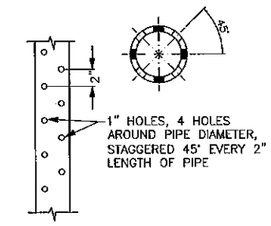

PERFORATION DETAIL (2/15)
NOT TO SCALE

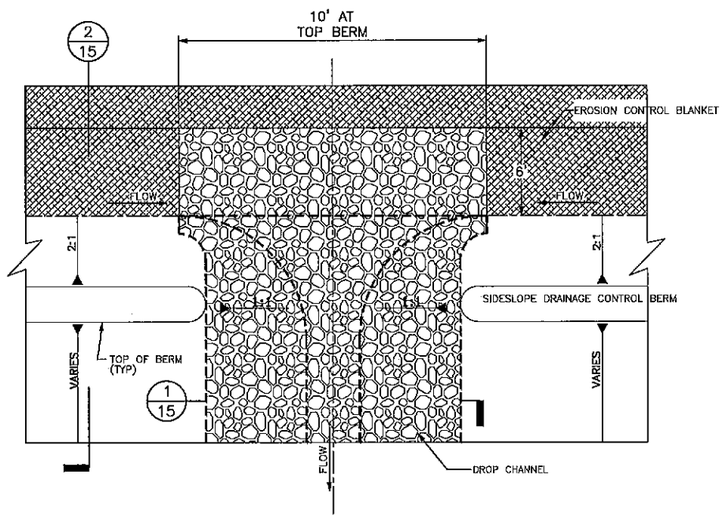

DITCH CUT IN DRAINAGE CONTROL BERM PLAN (3/15)
NOT TO SCALE

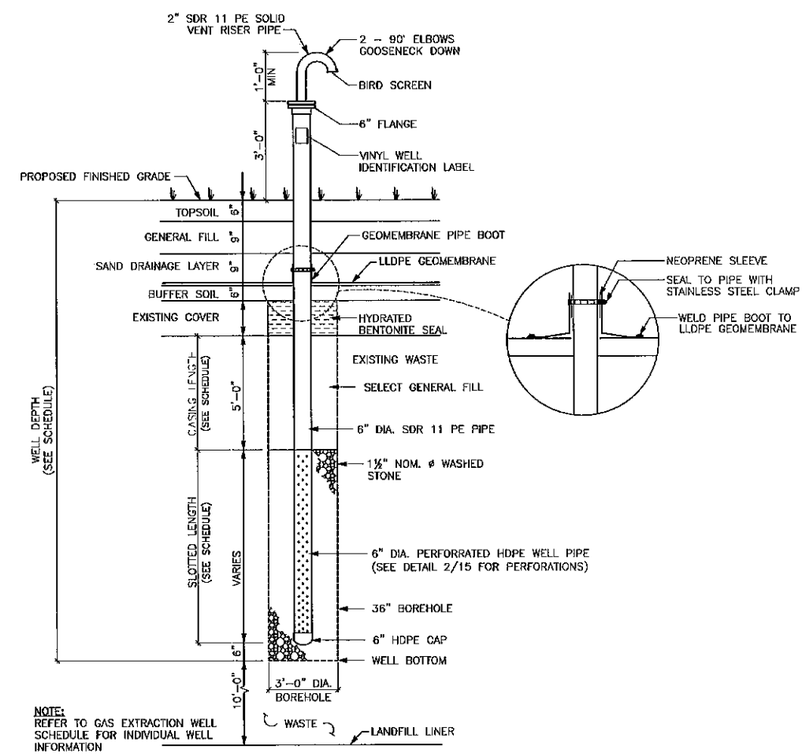

LANDFILL GAS VERTICAL VENT WELL (1/15)
NOT TO SCALE

NO.	DATE	BY	REMARKS
4			
3			
2			
1			

DESIGNED	JB	DATE	JUNE 2013
DRAWN	MK	DATE	JUNE 2013
APPROVED	JB	DATE	JUNE 2013

I hereby certify that this plan, specification, or report was prepared by me or under my direct supervision, and that I am a duly Licensed Professional Engineer under the laws of the State of Minnesota.
James C Barkos
Date 6-24-13 Reg. No. 44915

LIESCH
www.liesch.com
Hydrogeologists • Engineers • Environmental Scientists
Minneapolis • Los Angeles • Milwaukee • Phoenix

2013 APPLICATION FOR REPERMIT
ST. LOUIS COUNTY REGIONAL LANDFILL
VIRGINIA, MINNESOTA

SCALE: AS SHOWN
PROJECT NO. 59124.00

CLOSURE DETAILS

SHEET: 15 OF: 18
REV.

MK 6-24-2013 T:\liesch_projects\IA\59124\cad\2013 repermit\sheet 15.dwg

N

60 0 60 120

Scale (feet)

NO.	DATE	BY	REMARKS
4			
3			
2			
1			

DESIGNED	JB	DATE	JUNE 2013
DRAWN	MK	DATE	JUNE 2013
APPROVED	JB	DATE	JUNE 2013

I hereby certify that this plan, specification, or report was prepared by me or under my direct supervision, and that I am a duly Licensed Professional Engineer under the laws of the State of Minnesota.

James C Berkas

Date 6-24-13 Reg. No. 44916

LIESCH www.liesch.com

Hydrogeologists • Engineers • Environmental Scientists

Minneapolis • Los Angeles • Milwaukee • Phoenix

2013 APPLICATION FOR REPERMIT

ST. LOUIS COUNTY REGIONAL LANDFILL

VIRGINIA, MINNESOTA

SCALE: AS SHOWN

PROJECT NO. 59124.00

EXISTING PRIMARY SRAYFIELD CONFIGURATION

SHEET: 16 OF: 18

REV.

MK: 6-24-2013 1 - 1:\liesch_projects\1\59124\cad\2013_repermit\sheet_16.dwg

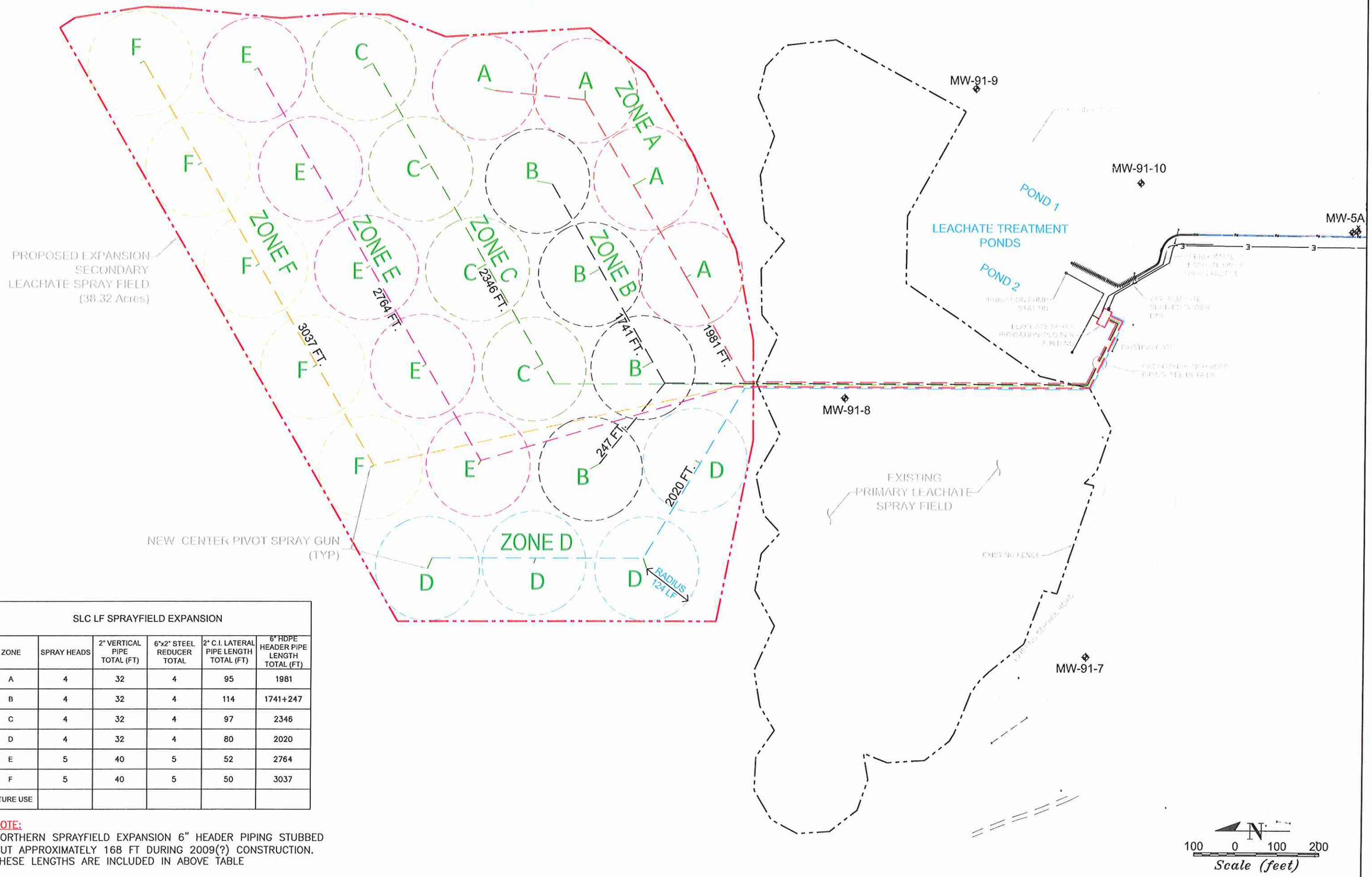

SLC LF SPRAYFIELD EXPANSION					
ZONE	SPRAY HEADS	2" VERTICAL PIPE TOTAL (FT)	6"x2" STEEL REDUCER TOTAL	2" C.I. LATERAL PIPE LENGTH TOTAL (FT)	6" HDPE HEADER PIPE LENGTH TOTAL (FT)
A	4	32	4	95	1981
B	4	32	4	114	1741+247
C	4	32	4	97	2346
D	4	32	4	80	2020
E	5	40	5	52	2764
F	5	40	5	50	3037
FUTURE USE					

NOTE:
NORTHERN SPRAYFIELD EXPANSION 6" HEADER PIPING STUBBED OUT APPROXIMATELY 168 FT DURING 2009(?) CONSTRUCTION. THESE LENGTHS ARE INCLUDED IN ABOVE TABLE

NO.	DATE	BY	REMARKS
4			
3			
2			
1			

DESIGNED JB DATE JUNE 2013
DRAWN MK DATE JUNE 2013
APPROVED JB DATE JUNE 2013

I hereby certify that this plan, specification, or report was prepared by me or under my direct supervision and that I am a duly Licensed Professional Engineer under the laws of the State of Minnesota.
James C Berkos
Date 6-24-13 Reg. No. 44916

LIESCH
www.liesch.com
Hydrogeologists • Engineers • Environmental Scientists
Minneapolis • Los Angeles • Milwaukee • Phoenix

2013 APPLICATION FOR REPERMIT
ST. LOUIS COUNTY REGIONAL LANDFILL
VIRGINIA, MINNESOTA

SCALE AS SHOWN
PROJECT NO. 59124.00

PROPOSED SECONDARY EXPANSION
SRAYFIELD CONFIGURATION

SHEET: 17 OF: 18
REV.

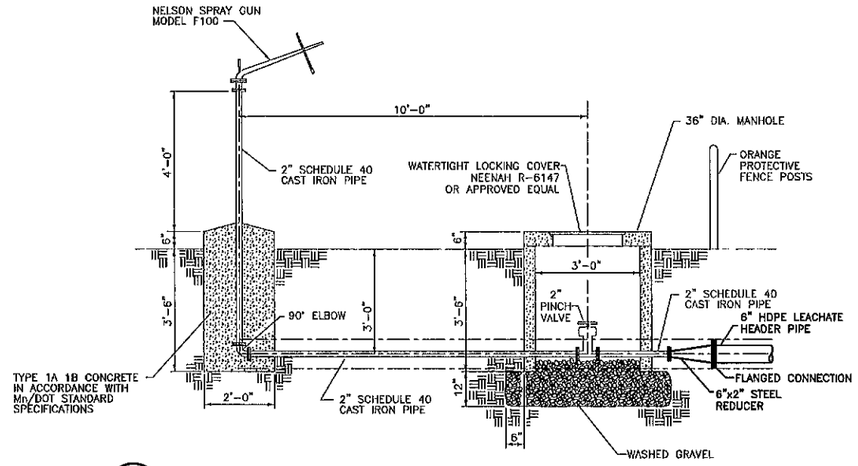

1/18 DETAIL: EXISTING SPRAY GUN & CONTROL VALVE MANHOLE
SCALE: NONE

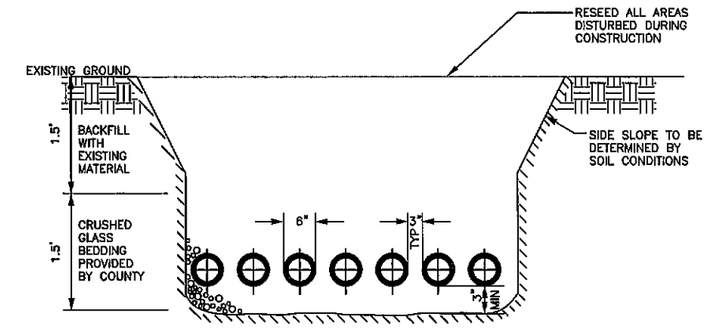

2/18 DETAIL: 6 INCH HDPE PIPE TRENCH
SCALE: NONE

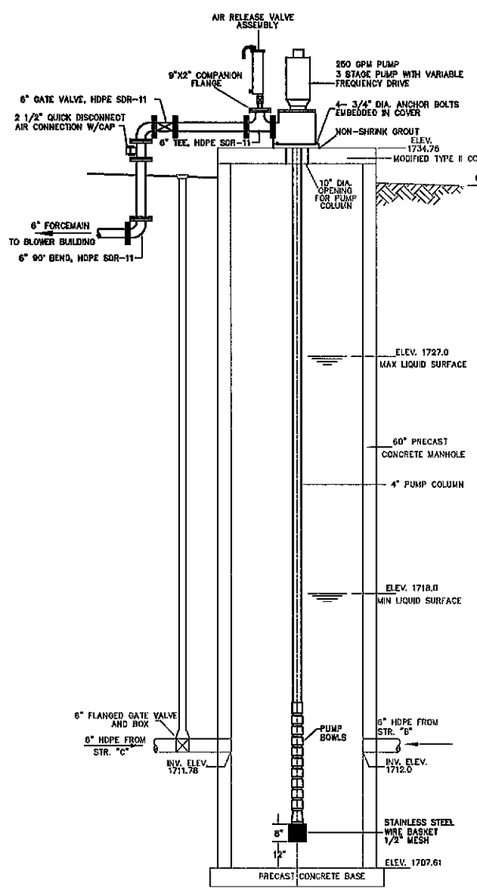

4/18 SECTION: EXISTING IRRIGATION PUMP STATION
SCALE: NONE

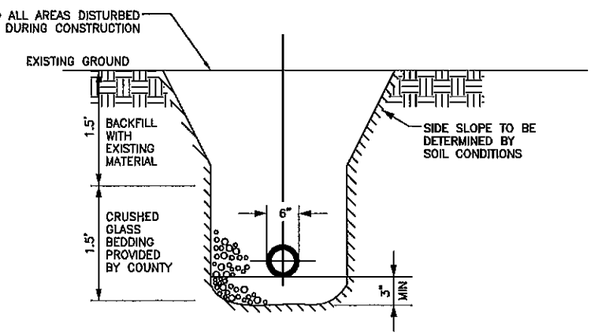

3/18 DETAIL: SINGLE 6 INCH HDPE PIPE TRENCH
SCALE: NONE

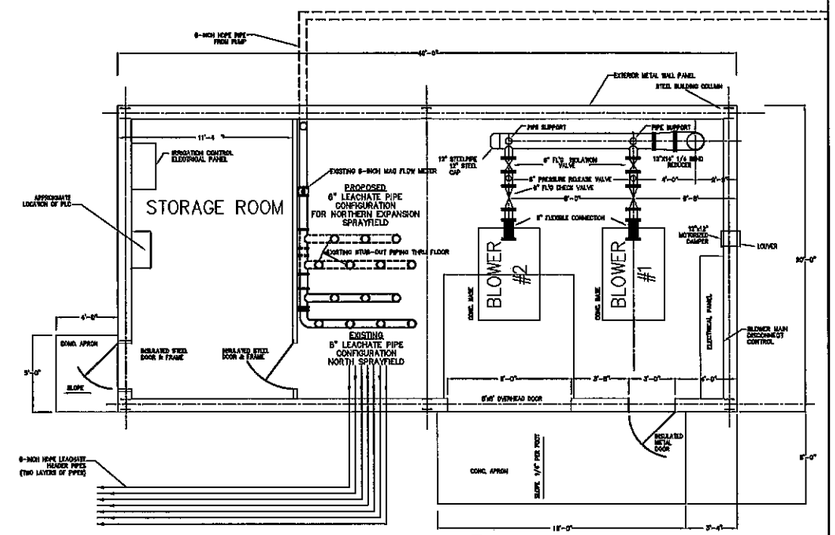

FLOOR PLAN

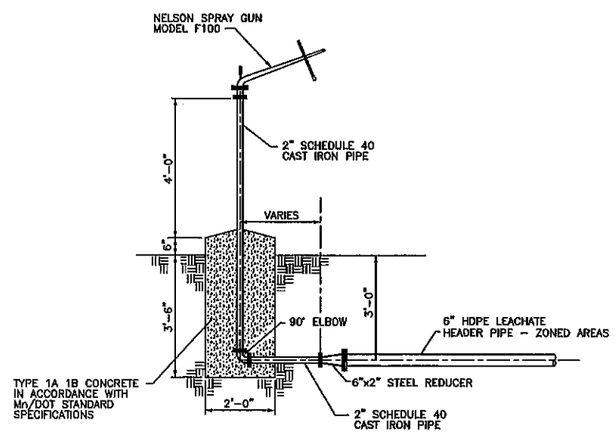

5/18 DETAIL: PROPOSED SPRAY GUN
SCALE: NONE

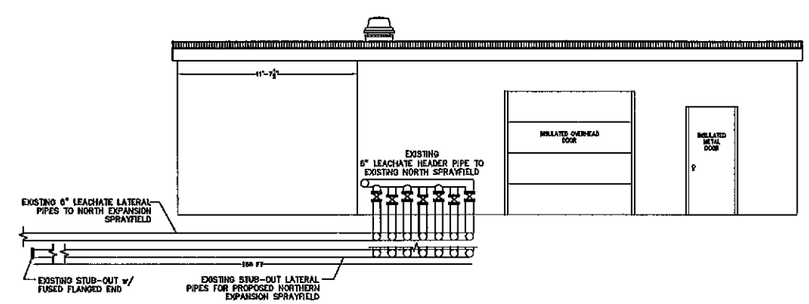

FRONT ELEVATION (South View)

6/18 EXISTING BLOWER BUILDING LAYOUT
SCALE: NONE

NO.	DATE	BY	REMARKS
4			
3			
2			
1			

DESIGNED	JB	DATE	JUNE 2013
DRAWN	MK	DATE	JUNE 2013
APPROVED	JB	DATE	JUNE 2013

I hereby certify that this plan, specification, or report was prepared by me or under my direct supervision and that I am a duly Licensed Professional Engineer under the laws of the State of Minnesota.
James C. Berkop
Date 6-24-13 Reg. No. 44918

LIESCH
www.liesch.com
Hydrogeologists • Engineers • Environmental Scientists
Minneapolis • Los Angeles • Milwaukee • Phoenix

2013 APPLICATION FOR REPERMIT
ST. LOUIS COUNTY REGIONAL LANDFILL
VIRGINIA, MINNESOTA

SCALE: AS SHOWN
PROJECT NO. 59124.00

LEACHATE SPRAY APPLICATION DETAILS

SHEET: 18 OF: 18
REV.

MK 6-24-2013 1 = 1 n:\liesch_projects\VA59124\cad\2013_repermit\sprayfield_layout\sheet_sprayfield_details.dwg

TAB C

Operation and Maintenance Plan

Prepared and Submitted By:

ST. LOUIS COUNTY SOLID WASTE DEPARTMENT
307 First Street South, Suite 115
Virginia, MN 55792

NORTHEAST TECHNICAL SERVICES, INC.
315 Chestnut Street
P.O. Box 1142
Virginia, Minnesota 55792

and

LIESCH ASSOCIATES, INC.
350 St. Peter Street
St. Paul Minnesota , Minnesota 55102

July 2013

Table of Contents

Page

I. **INTRODUCTION** 1

A. Site Background 1
B. Objective 1

II. **FACILITY OPERATIONS** 2

A. Site Access and Traffic Control 2
B. Acceptable Materials for Disposal 2
C. Fill Progression 3
D. Waste Placement 3
E. Daily Cover 4
F. Dust Control 4
G. Vector Control 4
H. Litter Control 4
I. Fire Protection 4
J. Noise Control 5
K. Leachate Management 5
1. Leachate Collection System 5
2. Leachate Pumping System 5
3. Leachate Forcemain 6
4. Leachate Treatment System 6
a. Operator Qualifications 6
b. Aerated Ponds 7
i. Operating Modes 7
ii. Pond Structure "A" 7
iii. Pond Structures "B" and "C" 7
iv. Pond Aeration 7
v. Blower Operation and Maintenance 8
vi. General Pond Maintenance 9
vii. Pond Leak Detection System 9
viii. Pond Drawdown for Maintenance 9

Table of Contents (Cont.)

Page

4. Leachate Treatment System (continued)
c) Spray Irrigation System 10
i. General Operation 10
ii. Irrigation System Pump Station 10
iii. Spray Irrigation Area 11
iv. Irrigation System Maintenance 11
L. Landfill Leak Detection System 12
M. Surface Water and Erosion Control 12
N. Gas Monitoring 12

III. MONITORING, INSPECTION, AND REPORTING REQUIREMENTS 13

A. Monitoring 13
B. Inspections 13
C. Reporting 13

TABLES

1 Inspection and Maintenance Schedule
2 Valve Status for Modes of Operation
3 Valve Status: Pond Drawdown for Maintenance

FIGURE

1 Aeration Pond Structures and Valves

APPENDIX
St. Louis County Solid Waste Facilities Standard Operating Procedures

Section I
Introduction

An Operation Procedures and Maintenance Manual dated December 1993 was prepared for the St. Louis County Regional Landfill. For repermitting purposes, this section provides a summary of the existing two (2) volume Operation and Maintenance Plan for the St. Louis County Regional Mixed Municipal Solid Waste Disposal Facility which was prepared to fulfill the Minnesota Pollution Control Agency (MPCA) requirements as stated in Minnesota Solid Waste Rules Part 7035.1700. This section is not intended to take the place of the December 1993 plan but to provide a summary of pertinent Operation and Maintenance items.

A. SITE BACKGROUND

The St. Louis County Regional Landfill is located approximately 2.5 miles east of Virginia, Minnesota. The landfill has been in operation since the fall of 1993 and disposes of approximately 92,000 cubic yards of waste and cover materials annually.

B. OBJECTIVE

The objective of the Operation and Maintenance Plan is to establish guidelines for use by facility personnel in the daily operations, including requirements and procedures for inspections, maintenance, sampling, and reporting. Modification of operational procedures from those stated herein require MPCA approval prior to implementation. A Closure, Post-Closure, Contingency Action Plan has been prepared for this site (under separate cover) which identifies closure and post-closure procedures and a range of possible emergencies or monitoring-triggered contingencies (non-compliance's) that could occur, and the procedures to be followed in case of these events.

The Design Report, construction specifications and plans should be referred to for more detail on the design of facility features.

Section II
Facility Operations

A. SITE ACCESS AND TRAFFIC CONTROL

Site access is controlled with fencing along the west side of the access road and with a locking gate across the access road at the facility entrance. The gate is locked during all non-operating hours. A permanent sign posted at the facility entrance identifies the site and permit number, rates, penalty for dumping violation, and the following public use hours:

_ Monday through Friday	8:00 A.M. to 4:30 P.M.
_ Saturday	8:00 A.M. to 3:30 P.M.

During operating hours, an operator will be stationed at the weigh scales to control site access, ascertain load contents, and perform weighing.

Access roads are maintained year-round and are constructed and maintained to prevent interruption of traffic flow due to inclement weather. If inclement weather conditions prohibit spreading and compacting of waste, short term storage areas within the lined area may be used until conditions improve. Recycled glass that is crushed screened and processed on-site is utilized on an as needed basis to bridge "soft spots" that develop on the access roads within the permitted footprint of the landfill. Traffic is routed to provide a smooth pattern that is circular, if possible, and that avoids crossing patterns.

B. ACCEPTABLE MATERIALS FOR DISPOSAL

While St. Louis County encourages recycling and back yard composting, in general, solid and semi-solid wastes that are accepted at the facility include paper, plastic, wood, food waste, other organics, metals, aluminum, glass, and other inorganics. The County's municipal waste stream includes commercial and residential solid waste from the St. Louis County Solid Waste Management Area and coal boiler bottom ash from the city of Virginia, Minnesota. In addition, quantities of industrial by-product from local mines have also been accepted. Industrial waste is accepted in accordance with the Industrial Waste Management Plan prepared for the facility. Materials that will not be accepted for disposal at this landfill include:

- White Goods
- Electronics (CRT's)
- Tires
- Lead acid batteries
- Yard Waste
- Free Liquids or wastes containing them
- Raw sewage sludge, raw animal manure, septic tank pumpage.
- Infectious wastes

- Hazardous wastes, as identified by the EPA.
- Radioactive wastes
- Any other substances deemed unacceptable by St. Louis County or the MPCA.

Electronics and recyclable mattresses are stored inside a building and shipped to recyclers for processing. White goods, scrap metal, lead acid batteries, used motor oil and filters, antifreeze, and tires will be collected and staged near the site to accumulate adequate quantities for recycling. Staging time shall not exceed one year and the total number of tires accumulated shall not exceed 2,500. Scrap metal, appliance parts and demolition materials reuse is allowed.

C. FILL PROGRESSION

An initial cover of waste approximately 6-feet thick is placed over all liner areas when constructed to protect against liner damage due to freezing. If enough waste is not available, the County has and will utilize a minimum of 2 feet of straw/hay frost protection. Continued filling will then likely begin along the west edge and proceed in 100-foot wide strips (oriented north to south) and proceed east to the eastern limits of the liner system (prevailing winds are from the west). Filling will progress upward to final grade as directly as possible.

D. WASTE PLACEMENT

Heavy equipment will be utilized in landfill operation for waste placement and compaction, to transport and place cover material, and for general maintenance of the site. At a minimum, the following equipment will be maintained on-site:

- Compactor
- Crawler dozer (D-6 size minimum)
- Rubber-tired front-end loader
- Dump truck
- Road grader (optional)
- Water tank truck (available)
- Scraper (optional)

Appropriate periodic maintenance for the above equipment will be conducted in accordance with manufacturer's operation and maintenance manuals.

Wastes are generally spread into lifts and no more than 2-feet thick and then compacted with a minimum of five passes of the compactor. Initial waste placement immediately above the drainage layer utilizes select and sorted wastes which are free of rebar, metal debris, and any other items of a size or shape which could cause damage to the liner system. Also, initial lift thickness is a minimum of two feet above the drainage layer prior to any vehicle traffic (traffic directly on the drainage layer or with less than two feet of fill shall be prohibited). Filling generally begins on low ground and work towards high ground maintaining intermediate waste slopes of three horizontal to one vertical. Active areas are kept as small as practicable and are graded to avoid

creating ponded water. Stormwater (including snow) falling on active areas are managed as leachate.

E. DAILY COVER

Daily cover is applied to the active waste area to reduce odors and wind blown wastes and to facilitate vector control. Daily cover includes the use of municipal utility coal ash and some local mine waste as a leveling layer and a minimum thickness of six inches of silty sand or silty clay soils obtained from a borrow site near the landfill. Special consideration and preparation for winter months are conducted to ensure effective landfill cover operations and include providing insulation over borrow areas or use of alternative cover material such as wood chips, blankets or other approved wastes. Minimizing the size of the active area in the winter months also reduces the amount of cover needed.

Areas of fill which have not received additional waste for 30 days shall have an additional six inches of cover applied, resulting in an intermediate cover of 12-inch minimum thickness.

F. DUST CONTROL

Generation of dust is controlled, as necessary, to prevent fugitive dust from leaving the landfill area. Application of calcium chloride or water to access roads or traffic areas via tanker truck are the primary means of dust control. During windy conditions, waste placement in lower portions of the active area, when possible, should be conducted. Prompt establishment of vegetation on filled and covered cells are also be conducted to minimize dust generation.

G. VECTOR CONTROL

Application of daily cover is the primary means of vector control. If nuisance vectors become a problem in spite of this method of control, additional vector control measures will be implemented.

H. LITTER CONTROL

The landfill's surrounding trees and vegetation offer some protection against winds creating blowing litter. Any litter that is captured in the surrounding vegetation will be removed on an as-needed basis. Additionally, the County provides the landfill contractor with portable fencing that is erected downwind of the prevailing wind direction near the working face. The contractor provides a full time laborer to pick windblown trash on and around the fence; from access, service, and haul roads, including culverts and ditches; from the other areas in and around the landfill including berms, canister site, leachate system, sedimentation basin, demolition materials storage area and surrounding areas on a routine basis to meet Minnesota Pollution Control Agency standards.

I. FIRE PROTECTION

Open burning at the landfill is prohibited. Under special pre-approval and only in accordance with Minn. Rule APC8, burning may be conducted in a controlled area away from fill area(s).

A fire which occurs in the waste will be controlled by digging out the burning material and covering it with dirt and/or by use of the water tank truck. Each piece of landfill operating equipment is equipped with a readily accessible, properly maintained fire extinguisher. If a fire cannot be quickly extinguished, the local fire department is summoned for assistance.

Municipal ash temperature is monitored at the scale. If it is above 160° F the load is rejected. When accepted by the scale attendant, the ash is stockpiled and monitored for evidence of combustion prior to placement and compaction. Available methods of communication to individuals are utilized to advise containing ash from wood stoves in metal containers for at least two weeks prior to placement in trash receptacles. Where needed, separate containers are available for wood ash disposal at St. Louis County transfer facilities. These measures will help prevent landfill fires from occurring.

J. NOISE CONTROL

No undue noise is created at the landfill. Mufflers on landfill equipment is maintained to avoid undue noise. Any complaints of excessive noise are forwarded to the landfill operation contractor for evaluation of potential actions.

K. LEACHATE MANAGEMENT

1. Leachate Collection System

At a minimum, annual cleaning of the leachate collection system is conducted utilizing a jet-type hydraulic cleaning machine with a minimum of 1,100 feet of plastic hose available for jet cleaning. (This type of equipment/service is provided by several different contractors in Minnesota.) For reference, required inspection and maintenance is summarized in Table 1. Cleaning begins in the furthest upstream sections of the piping system and then progresses downstream toward the lift station. The cleaning nozzle is inserted into each inspection riser and is operated to wash solids downstream to the lift station. Solids removal from the lift station can be conducted as described in the next section.

2. Leachate Pumping System

All landfill personnel are aware of the alarm light (flashing red warning light) and horn which activate if a high water level condition occurs in the lift station wet well. This alarm condition is brought to the attention of the operations contractor and addressed immediately by the leachate treatment operations contractor.

The lift station pumps and controls are inspected weekly and should include the following items:

- Open control panel and wet well hatch and observe warning lights for pump motor overheating and seal failure.
- Run each pump on manual operation for a sufficient time to verify adequate pump operation.
- Verify that float switches and cables are hanging freely.
- Record readings from running time meters and verify that pumps are running for approximately equal time.
- Verify that condensate heater is functioning properly (panel should be moisture-free).
- Ensure hand-off-automatic switch is on "automatic" after completing the inspection.

The lift station is cleaned to remove accumulated solids on an annual basis in conjunction with the leachate collection system cleaning, or more frequently if needed. Cleaning is accomplished by directing a stream of high-pressure water into accumulated solids to break up and suspend this material, allowing the lift pumps to pump it to the treatment ponds.

If a lift station pump requires service, the power supply is disconnected/locked out and the pump is pulled using the cable hoist and pump lift chains. The pump is moved to a suitable location for repair or maintenance and is serviced in accordance with the pump manufacturer's operation and maintenance manual. After servicing, the pump will be reinstalled and the hand-off-automatic switch will be returned to the "automatic" position. Pump servicing may be performed by landfill personnel, where possible, or by specialized contractors/suppliers, as necessary. Troubleshooting of control panels/wiring will only be conducted by a qualified electrician.

The air relief valve in the valve manhole is inspected and serviced in accordance with the manufacturer's operation and maintenance manual. Since the manholes are hazardous locations (confined space), only personnel having proper training and equipment are allowed to enter them. Warning signs are posted on all leachate manholes.

If one pump is found to be running for longer periods than the others, the check valve is inspected for plugging or leaks. The check valve can be back flushed by manually holding the valve open (via the external lever arm) while operating the opposite pump. If this does not correct the problem, the valve is removed for repair or replacement. Gate valves are operated quarterly to maintain proper operation (turn pumps off prior to conducting this procedure). Piping is inspected for leaks regularly and repairs are made as needed.

Any wet well maintenance requiring entry is conducted by personnel with proper training and equipment.

3. Leachate Forcemain

Air relief valves located in air relief manholes along the forcemain are inspected and serviced quarterly (refer to manufacturer's operation and maintenance manual for servicing instructions). Since manholes are hazardous locations (confined spaces), entry is conducted by personnel with proper training and equipment. Piping is checked for leaks on a quarterly basis. Any water accumulated in a manhole is removed and transported to the leachate treatment ponds. On a schedule of every other year the lines are jetted to prevent "leachate rock" conditions.

4. Leachate Treatment System

a. Operator Qualifications

MPCA policy suggests that a Class C wastewater treatment facility operator is required to operate the aerated pond system and that a Type 5 waste disposal operator certificate is required to operate the spray irrigation system. Class C certification is recommended due to the complexity of the system. The treatment system operator must be familiar with aerated ponds and spray irrigation systems. General knowledge of pumps, aeration equipment, irrigation equipment, sampling techniques, laboratory methods, and controls, is required. Also, operator must ensure that entry into any of the pond structures that are confined spaces is only conducted by personnel having appropriate training and equipment.

b. Aerated Ponds

i. Operating Modes

In normal operation, the two ponds are operated in series (Figure 1). The leachate pumped from the lift station is directed through Pond Structure "A" and into Pond 1 for initial treatment. Pond 1 effluent passes through Pond Structure "B" and into Pond 2 for additional treatment. Pond 2 effluent passes through Pond Structure "C" and into the irrigation pump station. Operating levels of Ponds 1 and 2 are controlled by a system of stop plates/weirs in Pond Structures "B" and "C", respectively. Depth of water in the ponds can be adjusted by using stop plates of varying heights (½-foot increments) and is maintained between minimum and maximum depths of 6 and 15 feet. The 6-foot minimum ensures effective oxygen transfer and maximum depth was a function of pond design. Prior to winter months, the liquid depth must be low enough to provide enough storage to last until the irrigation season begins, but still providing enough liquid depth to protect the pond during winter months.

Alternatively, the ponds can be operated in parallel, rather than series mode. Also, each pond can be operated alone. Operating only one pond provides a means to perform maintenance or repairs on the other pond. However, operation of only one pond will yield a lower treatment efficiency than that of two ponds. The valve settings required for each of the four modes of operation are given in Table 2. The valve numbering scheme in Table 2 corresponds to the valve numbering shown on Figure 1.

ii. Pond Structure "A"

Adjusting the weir plate in this structure controls flow to the ponds. Adjustment is especially critical in parallel operating mode in order to get equal splitting of flow. Repeat adjustments may be necessary for this case to "fine

tune" the flow split. Loosening of two bolts allows adjustment of the weir plate up or down.

iii. Pond Structures "B" and "C"

Removing or installing stop plates in these structures controls the operating water levels in the ponds upstream of each structure. Gate valves are operated to equalize the pressure on both sides of the plates prior to removing or installing additional plates.

iv. Pond Aeration

Normal operation consists of operating two blowers with all air control valves open. Normal operation applies to periods where no discharge is occurring and when loading rates are near design rates. Blower electrical controls can be set to automatically alternate between the 2 blowers on a 24-hour basis, providing for equal blower usage.

During periods of pond discharge, aeration near the outlet end of the pond is reduced via valves on the 3-inch air laterals near the outlet structure (allows for water clarification prior to discharge). The number of laterals shut off will be based on operator experience.

If loadings are significantly lower than design loading, air delivery could potentially be reduced as a cost saving measure. Operation of one blower instead of two would be one method of reducing air flow.

If loadings are observed that are higher than design, both blowers can be run simultaneously to enhance treatment effectiveness. Blowers must be run by manual control for this operating mode.

If one pond is being drawn down, a significant difference in water levels occurs. As the water level drops, air flow into the lower-level pond will increase (while the other pond's air flow will decrease) due to the change in water pressure present at each diffuser. During this process, the operator must gradually adjust air flow valves to maintain balanced air flow. If the water level is drawn down to the diffusers, air flow to that pond must be completely shut off.

v. Blower Operation and Maintenance

Blowers are inspected regularly for proper operation (no unusual noises, blower temperature is normal, guards are in place, discharge pressure is adequate). Blower lubrication and other maintenance is conducted in accordance with the manufacturer's operation and maintenance manual. Blower repairs or

adjustments are conducted by qualified personnel. Troubleshooting and repairs to electrical motors or controls are done by a qualified electrician.

Inlet filters for the blowers are inspected regularly and cleaned or replaced as necessary. High blower temperatures or reduced pressures can be indicative of a clogged filter.

Belts and relief valves are also inspected regularly for signs of wear and replaced as necessary.

When conducting maintenance or repairs near moving parts, disconnect/lock out procedures to the power supply for the blower motor must be followed. Also, the isolation valve must be closed whenever the blower discharge pipes are serviced.

vi. General Pond Maintenance

Inspection of the pond dikes occurs regularly from spring through fall for erosion damage. Repair/restoration to vegetation occurs as necessary. Valves are operated quarterly; however, valves must be operated in combination to prevent discharge of untreated waste. Valves are checked following this activity to ensure proper operating settings. Exterior slopes of the ponds are kept free of tree or brush growth. Aquatic vegetation in the ponds will also be removed as necessary.

The sludge accumulated in the ponds is sampled every two years to help prevent reaching concentrations that would cause the sludge to become hazardous waste. Sludge that is shown to be non-hazardous can be removed from the pond and spread on intermediate cover within the landfill. Sludge removal will be facilitated by shutting off the air supply, allowing the solids to settle, and then pumping the solids into a tanker truck for transport.

vii. Pond Leak Detection System

Leak detection manholes shall be inspected quarterly. If discharge has accumulated in a manhole, samples are analyzed to verify whether it originated from the pond or from another source. If pond leakage is evident and excessive, evaluate corrective actions alternatives.

Build-up of more than 12 inches of liquid in leak detection pipes should be prevented. Liquids will be pumped out, as necessary, using a portable submersible pump and generator and returned to the treatment ponds.

viii. Pond Drawdown for Maintenance

If pond drawdown is required for maintenance or for other reasons, the valve settings summarized in Table 3 should be followed to accomplish drawdown. When drawing down the pond, aerator flow rates may require rebalancing as discussed previously. In addition to the control provided by the stop plates and valves, the blind flange on the high-level outlet structures must be removed when the liquid surface reaches the top of the open pipe, but prior to opening the valve on the low-level pond structure. To be effective, the stop plate bypass valve would need to be opened at the same time. When the liquid surface reaches the invert elevation of the high-level pond outlet structure, then the valve on the low-level draw-off must be opened. Similarly, when the liquid surface reaches the top of the open pipe and the low-level draw-off, the blind flange on that structure must be removed in order to complete the drawdown.

c. Spray Irrigation System

i. General Operation

Operation of the irrigation system is to occur during the growing season each year (approximately early May through September). During the other portion of the year, leachate is collected in the aerated pond system for treatment and storage for the period of October through early May (a minimum of 260 days). Irrigation only during the growing season allows for plant uptake of leachate effluent nutrients and, to a lesser extent, uptake of some of the other leachate constituents. The original 22.5-acre irrigation site as shown on Figure No. 1 (in Design Report) consisted of 16 fixed head rotary gun-type sprinkler nozzles which distribute the leachate to the soil. Each spray head was designed to spray 75 gallons per minute (gpm), rotate 360 degrees, and cover an area approximately 238 feet in diameter. Six additional fixed head rotary gun-type sprinkler nozzles were installed around the perimeter of the leachate ponds in 1999. These spray heads were set to rotate 180 degrees.

In 2009, the County upgraded its leachate spray irrigation system. The major components of the upgrade included the installation of a larger vertical turbine pump, seven (7) electronically actuated valves, and an electromagnetic flow meter. Additionally, upgrades to the North spray irrigation field included installation of 6-inch pipe throughout the 22.5-acre land application field and five (5) additional fixed head rotary gun-type sprinkler nozzles, increasing the total number of sprinkler nozzles to 21. These upgrades maximized spray coverage throughout the field and significantly reduced the amount of maintenance required to keep the system operating efficiently. Leachate has been applied over the entire 22.5-acre site since 2010.

After aeration treatment and testing, the leachate is sprayed on to an adjacent 22.5- acre field for further biological processing. The design capacity of 6,000,000 gallons for leachate storage has proven to be more than adequate. In the summer of 1999 the leachate management system was upgraded by the addition of a Programmable Logic Controller (PLC), modifications to the existing sprayers.

In 1999, St. Louis County also installed six fixed head rotary gun-type sprinkler nozzles on 9 acres located north of the current permitted footprint. These spray heads rotate 360 degrees. See Figure No. 1 (in Design Report) for the location of this spray irrigation area.

In 2008, the six (6) sprinkler nozzles and irrigation lines within the South spray irrigation field were removed to allow for the development of future landfill cells.

Thorough inspection and maintenance of the spray system occurs before and after the spray season. Repairs to the spray system during the spray season are made on an as needed basis.

ii. Irrigation System Pump Station

The pump station, located as shown on Figure 1, is a 60-inch diameter manhole with a vertical turbine pump. Pump controls provide for manual or automatic pump operation. In automatic operation, the pump station normally operates until the irrigation cart has reached the end of its lane, triggering lift station shutdown. As stated above, a low water level in the lift station or premature stoppage of the cart will also trigger lift station shutdown. The low level shutoff float setting is adjustable but is recommended to be set at a depth which corresponds to an aeration pond water level of six feet. The pump station has a flowmeter which indicates flow rate and total volume pumped.

iii. Spray Irrigation Area

A spray irrigation area management plan was presented as part of the December 1993 Operation Procedures and Maintenance Manual and the September 2001 Revised Environmental Monitoring System Workplan which discusses in detail the requirements and procedures associated with hydraulic loading rates, nitrogen loading, supplemental fertilizer application, crop management (including reseeding and harvesting), and monitoring requirements for soil and irrigation water quality and should be referred to for more detailed information.

The vegetation in the spray irrigation area is harvested and baled annually in June and September. Bales are stored and used for frost protection within the

landfill. If not needed for frost protection bales are disposed within the landfill working face.

iv. Irrigation System Maintenance

The irrigation pump station has a wire inlet screen to prevent large solids from entering the pump bowls. Should the inlet screen become clogged and require cleaning, the water must be removed from the wet well by pumping it down, first with the lift station pump and then with a portable pump to achieve complete water removal. The lift station turbine pump has an enclosed line shaft with oil lubricated bearings. Prior to each season's irrigation system start-up, the pump's oil reservoir is filled in accordance with the manufacturer's operation and maintenance manual. The flowmeter and air relief valve will also be maintained in accordance with the manufacturer's operation and maintenance manuals.

When the irrigation season ends each year, it must be winterized to avoid potential damage due to freezing of water. Tasks include the following:

1) Ensure three feet of liquid is present above the top of the pump bowls. (Alternatively, the wet well can be pumped down to where the water level is below the pump bowls.)
2) Drain the irrigation forcemain by opening all valves at the riser assemblies, by opening the drain valve back into the pump station wet well, and by opening the drain valve into the drain manhole at the irrigation site and pumping out that manhole.
3) Completely drain the air relief valve.
4) Remove lift station flowmeter and store in a heated building.

Irrigation equipment should be maintained in accordance with the manufacturer's operation and maintenance manuals. Irrigation site maintenance is discussed in detail in the December 1993 Operations and Maintenance Manual.

L. LANDFILL LEAK DETECTION SYSTEM

Manholes containing leak detection piping should be inspected on a monthly basis. Any leakage observed should be sampled and analyzed to determine if it is due to leakage through the liner system or due to other sources. If results suggest liner leakage, immediately collect an additional confirmation sample for analysis. If leakage is confirmed, identify the portion of the landfill where the leak is occurring and evaluate potential corrective actions. Liquids should not be allowed to build up to more than 12 inches in the leak detection piping. Liquids will be pumped into the leachate treatment ponds using a portable pump and generator.

M. SURFACE WATER AND EROSION CONTROL

Design of the site's stormwater management facilities were based on control of a 25-year, 24-hour rainfall event, at full site development. Comprehensive inspection of culverts and other stormwater structures are conducted annually, in the spring, and as needed on an on-going basis. Blocked or plugged culverts will be cleaned and any damaged structures should be repaired as necessary. Brush and free growth should be removed from ditches as necessary. Drainage berms are inspected regularly and repairs conducted as necessary.

The entire site is inspected for erosion three times per year: post snow-melt, mid-summer, and fall. However, erosional problems observed at any time during the year are addressed as soon as possible. Inspections are to include ditches, riprap areas, and areas around culverts and flumes. Erosional damage will be repaired as soon as possible including turf establishment in accordance with original project specifications.

The sedimentation ponds are designed to allow sedimentation storage capacity of 20 years based on an average of seven acres "under construction" over that time period. However, sediment build-up is checked annually. Sediment will be removed when the pond volume is approximately half full. Sediments removed can be air dried and used as daily cover in the landfill. Sediment traps will also have sediments removed when they have filled half the height of the trap outlet.

N. GAS MONITORING

Gas monitoring is conducted in accordance with the site specific environmental monitoring plan. Refer to Section II of the Design Report for the environmental monitoring plan.

Section III
Monitoring, Inspection, and Reporting Requirements

A. MONITORING

Groundwater and surface water monitoring shall be conducted in accordance with the "Revised Environmental Monitoring System Workplan," dated September 2001. Leachate treatment pond influent sampling, pond effluent sampling (irrigation lift station wet well), and irrigation area soils monitoring are also discussed in the December 1993 O & M Plan.

B. INSPECTIONS

Inspections are conducted daily and maintenance is performed as needed. The St. Louis County Solid Waste Department Standard Operating Procedure is included as Appendix to this section. An inspection log will be maintained at the landfill and records retained at least five years after the date of inspection. All records involving enforcement actions will be retained until the action is resolved. The inspection records will include the following:

- Date and time of the inspection
- Name of the inspector
- List of observations made
- Date and nature of any repairs or other actions taken

Steps will be implemented within two weeks of the completion of an inspection to remedy deterioration or malfunction of equipment that was noted as part of the inspection.

C. REPORTING

The operating record kept at the landfill shall be carefully maintained and shall include the following items:

1. Inspection and maintenance records
2. Daily waste receipts (including industrial waste, asbestos, etc.)
3. Daily cover usage
4. Groundwater and stormwater monitoring
5. Leachate monitoring
6. Irrigation area soil monitoring
7. Leak detection monitoring
8. Irrigation system operating records
9. Annual soil waste quantity determination
10. Closure and post-closure plans

The solid waste quantity received at the landfill shall be converted from weigh tickets to a compacted landfill volume and reported to the MPCA annually. Land survey methods, will be utilized to develop annual landfill cross-sections which will document annual in-place volumes and assure the site is being worked in accordance with design drawings.

Water quality monitoring reports shall be prepared and submitted to the MPCA following each monitoring event and shall meet the requirements of Minn. Rules Pt. 7035.2815, Subp. 14.P. It is important to note that monitoring of the slope indicators installed in the southeast corner of the site will be completed quarterly with the groundwater sampling events. Monitoring of the slope indicators will consist of using a baler dropped down the riser pipe. If the baler does not drop the full depth, the slope indicator monitoring will resume on a monthly basis in accordance with current procedures.

An annual report shall be submitted to the MPCA and shall meet the requirements of Minn. Rules Pt. 7035.2585.

Tables

Table 1
Inspection and Maintenance Table

Item	Daily	Weekly	Monthly	Quarterly	3 Times Per Year	Annually	2 Years
Record Weather Information (during irrigation season)	X						
Record Irrigation Information (date, pumping rate, speed of equipment, volume, area irrigated)	X						
Inspect Lift Station		X					
Inspect Aeration Pond Blowers		X					
Inspect Pond Leak Detection Manholes		X					
Record Pond Influent Flow Rates (running time meters on lift station)		X					
Inspect Valve Manhole Piping for Leaks			X				
Inspect Aeration Pond Blower Belts, Inlet Filters, and Air Relief Valves			X				
Inspect Landfill Leak Detection Manholes			X				
Inspect and Service Forcemain Air Relief Valves, and Check Piping for Leaks				X			
Inspect and Exercise Gate Valves				X			
Inspect Entire Site for Erosion Damage (post-snow melt, mid-summer, & fall)					X		
Clean Out Leachate Collection System						X	
Clean Out Lift Station						X	(minimum)
Conduct Irrigation Area Soil Testing (just prior to irrigation season)						X	
Irrigation Area Crop Harvesting (or more often if more nitrogen uptake is needed)						X	(minimum)
Lubricate Irrigation Lift Station Turbine Pump						X	
Winterize Irrigation System						X	
Inspect Stormwater Culverts and Structures						X	(spring)
Inspect Sedimentation Pond Sediment Level						X	
Sample Aeration Pond Sediments							X
Remove Aeration Pond Sediments		(As needed)					
Remove Sedimentation Pond Sediments		(When 1/2 of pond volume is filled)					
Remove Sedimentation Trap Sediments		(When 1/2 the outlet height is reached)					

t:\0226\08\o&msched.xls

Table 3
Valve Status: Pond Drawdown for Maintenance

Valve No.	Description	Pond 1 Drawdown				Pond 2 Drawdown			
		High-Level to		Low-Level to		High-Level to		Low-Level to	
		Irrigation	Pond 2	Irrigation	Pond 2	Irrigation	Pond 1	Irrigation	Pond 1
1	Influent Pond 1	CLOSED	CLOSED	CLOSED	CLOSED	OPEN	OPEN	OPEN	OPEN
2	Influent Pond 2	OPEN	OPEN	OPEN	OPEN	CLOSED	CLOSED	CLOSED	CLOSED
3	High Level Effluent Pond 1	OPEN	OPEN	OPEN	OPEN	CLOSED	EITHER	CLOSED	EITHER
4	Low Level Effluent Pond 1	CLOSED	CLOSED	OPEN	OPEN	CLOSED	CLOSED	CLOSED	CLOSED
5	Str. "B" Stop Plate By-pass	CLOSED	CLOSED	OPEN	OPEN	CLOSED	CLOSED	CLOSED	CLOSED
6	Str. "B" to Pond 2	CLOSED	CLOSED	OPEN	CLOSED	CLOSED	CLOSED	CLOSED	CLOSED
7	Str. "B" to Irrigation Pump Station	OPEN	CLOSED	OPEN	CLOSED	CLOSED	EITHER	CLOSED	EITHER
8	High Level Effluent Pond 2	CLOSED	EITHER	CLOSED	EITHER	OPEN	OPEN	OPEN	OPEN
9	Low Level Effluent Pond 2	CLOSED	CLOSED	CLOSED	CLOSED	CLOSED	CLOSED	OPEN	OPEN
10	Str. "C" Stop Plate By-pass	CLOSED	CLOSED	CLOSED	CLOSED	CLOSED	CLOSED	OPEN	OPEN
11	Str. "C" to Irrigation Pump Station	CLOSED	EITHER	CLOSED	EITHER	OPEN	CLOSED	OPEN	CLOSED
Notes:		Discharge from Pond 2 to Irrigation is NOT possible	Portable pump is required	Discharge from Pond 2 to Irrigation is NOT possible	Portable pump is required	Discharge from Pond 1 to Irrigation is NOT possible	Portable pump is required	Discharge from Pond 1 to Irrigation is NOT possible	Portable pump is required

Source: Engineering Report, RREM, Inc., Revised March 1993

Table 2
Valve Status for Modes of Operation

Valve No.	Description	Series Mode	Parallel Mode	Pond 1 Alone	Pond 2 Alone
1	Influent Pond 1	OPEN	OPEN	OPEN	CLOSED
2	Influent Pond 1	CLOSED	OPEN	CLOSED	OPEN
3	High Level Effluent Pond 1	OPEN	OPEN	OPEN	CLOSED
4	Low Level Effluent Pond 1	CLOSED	CLOSED	CLOSED	CLOSED
5	Str. "B" Stop Plate By-pass	CLOSED	CLOSED	CLOSED	CLOSED
6	Str. "B" to Pond 2	OPEN	CLOSED	CLOSED	CLOSED
7	Str. "B" to Irrigation Pump Station	CLOSED	OPEN	OPEN	CLOSED
8	High Level Effluent Pond 2	OPEN	OPEN	CLOSED	OPEN
9	Low Level Effluent Pond 2	CLOSED	CLOSED	CLOSED	CLOSED
10	Str. "C" Stop Plate By-pass	CLOSED	CLOSED	CLOSED	CLOSED
11	Str. "C" to Irrigation Pump Station	OPEN	OPEN	CLOSED	OPEN

Source: Engineering Report, RREM, Inc., Revised March 1993

Figure

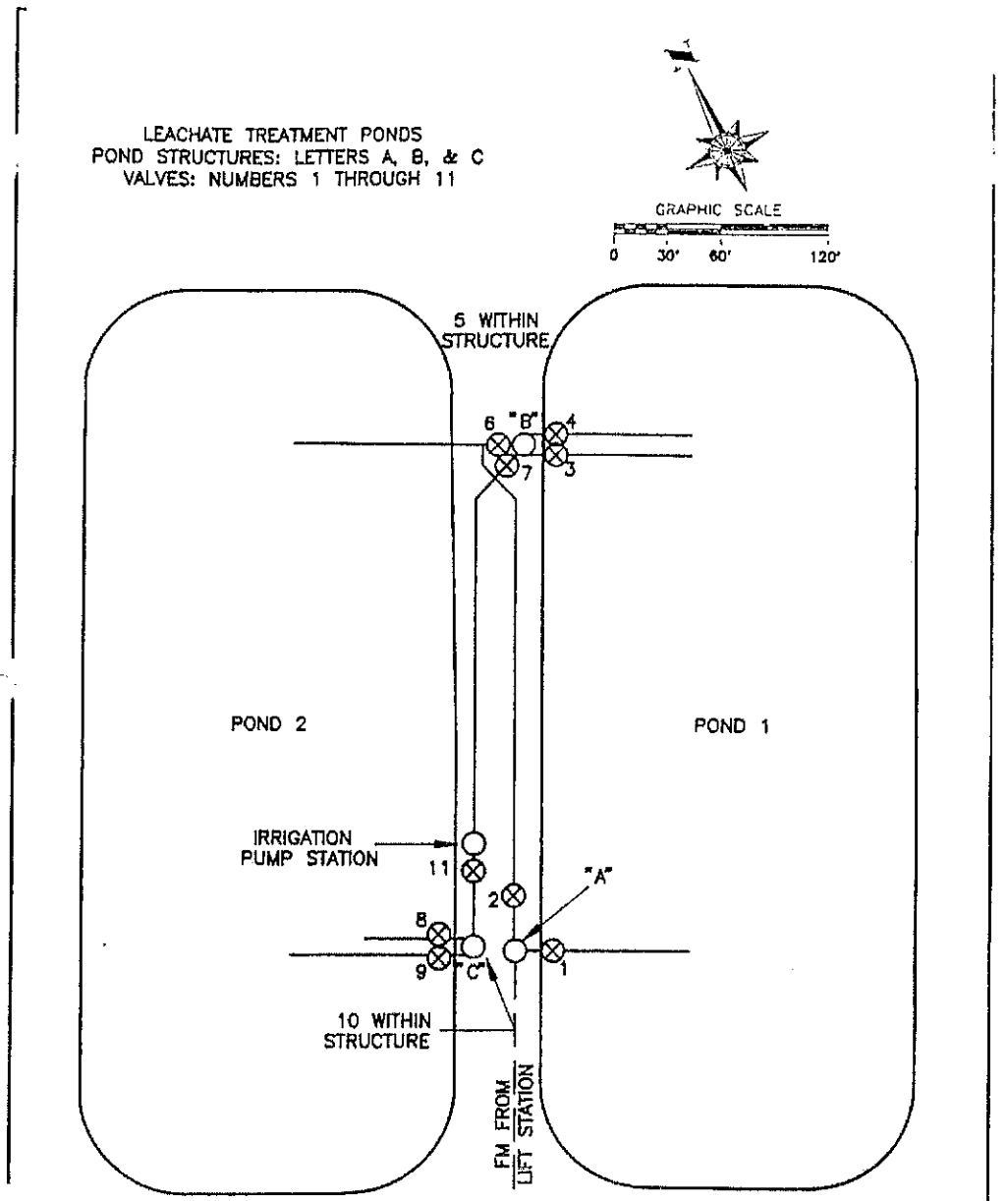

Source: Engineering Report, RREM, Inc., Revised March 1993

ST. LOUIS COUNTY	Wenck Wenck Associates, Inc. 1800 Pioneer Creek Ctr. Environmental Engineers Maple Plain, MN 55359	June 1996
Aeration Pond Structures and Valves		Figure 1

Appendix

ST. LOUIS COUNTY SOLID WASTE DEPARTMENT
ST. LOUIS COUNTY
SOLID WASTE FACILITIES
STANDARD OPERATING PROCEDURE MANUAL

February 9, 2005

Table of Contents

Section 1. **Introduction** 2

Section 2. **Preparing site for customer arrival** 2

Section 3. **Daily site inspection** 2
Inspecting site grounds 2
Correcting deficiencies 2
Recording daily site inspection results 2

Section 4. **Customer service** 2

Section 5. **General facility operating procedures** 3
Inspecting and evaluating waste 3
Monitoring customer disposal 3
Remove unapproved materials 3
Site cleanliness 3
Educating customers 3
Miscellaneous duties 3
Seasonal duties - Winter 3

Section 6. **Facility specific operating procedures at canister sites** 4

Section 7. **Facility specific operating procedures at weigh scale sites** 4

Section 8. **Facility specific operating procedures at the Regional Landfill** 4

Section 9. **Facility specific operating procedures at Brookston, Cook, Hudson, and Northwoods Transfer Stations** 4
Monitor waste water holding tank 4
Monitor loading of the transfer trailers 4
Transfer Stations building 5

Section 10. **Tipping fees, solid waste management tax** 5
Tipping fees 5
Solid waste management tax 6
Approved payment options 6
Check (personal, business, or money order) 6
Charge accounts 7
Solid waste coupon 7

Section 11. **Processing transactions at canister sites** 7
Determining how to charge for waste at canister sites 7
Recording canister site daily transactions 7
Recording Canister Site Waste Category Volumes Report 7

Section 12. **Processing transactions at weigh scale sites** 8
Determining how to charge for waste at weigh scale sites 8
Recording weigh scale site transactions 9

Section 13. **Solid waste coupon sales to customers** 9
Recording sales in the Solid Waste Coupon Sales Journal 9

Section 14. **Submitting daily transactions, coupon sales & volume reports** 9

Section 15. **Vehicle priority on the weigh scale** 10

Section 16. **Asbestos** 10

Section 17. **Industrial waste** 10

Section 18. **Classifying heavy industrial waste** 10

Section 19. **Recyclable materials - recycling roll-off program** 11

Section 20 **Special wastes** 11
Antifreeze 11
Appliances (white goods) 11
Batteries (lead acid) 12
Brush and branches 12
Electronic appliances (brown goods) 12
Oil filters 13
Oil (waste oil) 13
Scrap metal 14
Tires 15
Yardwaste 15

Section 21. **Unauthorized/unacceptable waste** 15

Section 22. **Salvaging/reuse policy** 15

Section 23. **Personal protective equipment policy** 16
Clothing 16
Safety footwear 16

Section 24. **Attendance at site** 16

Section 25. **Facility permits, emergency, and contingency action plans** 16

Section 26. **Accident and incident reports** 17
Incident Report Form 17

Section 27. **Miscellaneous** 17

Section 28. **Definitions** 17

Section 1. Introduction

The St. Louis County Solid Waste Department operates the Regional Landfill in Virginia, transfer stations located at Brookston, Cook, Hibbing, Hudson (Aurora), and Northwoods, (Ely), and canister sites at seventeen (17) locations spread throughout the County. Some sites accept only a few waste items, while others accept many. To determine the waste items accepted at a given facility, please see the current copy of the St. Louis County Solid Waste Facility Services (See Attachment # 10). Accept only those items listed at the respective disposal site.

Section 2. Preparing site for customer arrival

Attendant will arrive for work at designated shift time, and open the site access gate, buildings, and waste containers needed to serve the public. Perform the work necessary to prepare the site for the arrival of customers at the designated site opening time. During the winter months, employees are given preauthorized approval to arrive for work early as needed for snow removal purposes.

Section 3. Daily site inspection

A. **Inspecting site grounds.** Attendant(s) will inspect all areas of the site to determine whether it is in compliance with site standards. Pay particular attention to safety concerns, especially after severe weather events when problems such as downed power lines, leaning trees, washouts, and icy conditions can occur. **Keep yourself, and your customers out of dangerous situations.** If a dangerous situation is present, take immediate action to keep everyone away from the hazard, then notify your supervisor, or emergency personnel as the situation dictates so that qualified help can be sent to correct the problem.

If significant safety concerns are not identified, complete the inspection by inspecting for litter, proper access to disposal areas, unacceptable materials in the disposal and storage areas, and other circumstances that may impact the site. Also inspect for all other items on the site inspection report.

B. Correcting deficiencies. Perform necessary work to correct the deficiencies identified during the site inspection(except those requiring special skills).

C. **Recording daily site inspection results:**

1. Record the inspection results at canister sites in the Canister Site Daily Log (Attachment #17).

2. Record the inspection results at weigh scale sites in the St. Louis County Transfer Station Daily Self-Inspection Report. (Attachment #18)

Section 4. Customer service

Serve customers promptly, greet them cordially, and provide courteous and helpful assistance. Use respect based communications at all times. Provide clear and concise instructions so customers understand what is expected. Remember that some customers are not familiar with the services available, and proper procedures to be followed.

Section 5. General facility operating procedures

A. **Inspecting and evaluating waste.** Attendants will inspect and evaluate all incoming self-haul waste. Determine whether the waste falls in an unacceptable, acceptable, or special waste category. See Section 28 for the definitions of various waste types.

B. **Monitoring customer disposal**

1. Recycling roll-offs. Monitor the disposal of recyclables in recycling roll-offs/gaylord boxes to ensure that only approved materials are included. Remove unapproved recyclables from bins, empty bagged recyclables, and untie bundled newspapers.
2. Waste materials. Monitor the disposal of waste, and special waste materials to ensure they are placed in the proper tipping area and that no unacceptable materials are dropped off at the site.
3. Fluid levels. Monitor the fluid levels in waste oil, antifreeze, and sewage holding tanks. Contact the service provider giving sufficient notice so adequate time is available to receive the service before an emergency occurs.

c. Remove unapproved materials

Periodically during each shift inspect the disposal/storage areas, and remove unacceptable materials.

D. Site cleanliness

1. Maintain site shelter in a clean, neat, orderly condition.
2. Maintain bathroom/privy facilities in a, clean, neat, orderly condition.
3. Pick up all litter on and surrounding site grounds and roadways.
4. Rake ground around containers and storage areas.

E. Educating customers

Attendants are expected to help customers become aware of the proper methods of solid waste disposal, and are to hand-out printed information approved by the Solid Waste Department to inform the public about programs and procedures.

F. Miscellaneous duties

1. Use magnet to remove nails and sharp objects from tipping areas and driving surfaces.
2. Other duties as assigned

G. **Seasonal duties - Winter**

1. Remove snow from canister tops, around containers, and other site areas to provide safe and convenient access for customers.
2. Sand icy areas to minimize the potential for accidents.
3. For sites with propane heaters, order propane as needed from the list of Service Providers.

H. Seasonal duties - Summer

1. Mow grass.

2. Paint canisters

Section 6. Facility specific operating procedures at canister sites

A. Fill canisters to their capacity without packing the waste. The County pays the Contractor the same amount to empty a partially filled container as a full one.

B. When MSW canisters are completely filled , place a yellow tag (available in the shelter) on one of the locks so the haulage contractor knows the container is full and should be emptied. Remove yellow tags from emptied canisters.

Section 7. Facility specific operating procedures at weigh scale sites

A. Sweep sand and other debris off the weigh scale deck, and deck approaches.

B. During the winter months, remove snow and ice from the scale deck and deck approaches.

Section 8. Facility specific operating procedures at the Regional Landfill

A. Enter the working face coordinates in the landfill management system as needed (Regional Landfill only).

B. Each time a customer delivers friable asbestos, arrange for the landfill Contractor to be present when the customer arrives at the working face. The Contractor needs to take special measures to dispose of asbestos in the landfill

C. During the winter months at the Regional Landfill, after the work shift is completed, place the plywood panels provided for this purpose against the sides of the above ground weigh scale to minimize drifting snow accumulating under the scale deck.

D. On or about October 1st of each year, plug in the heat tapes at both ends of the weigh scale for the winter months. Test them to insure they are operational. Unplug the heaters on or about May 1st.

E. On or about October 1st of each year, notify your supervisor if the accumulated sand and other debris under the scale deck has not been removed.

Section 9. Facility specific operating procedures at Brookston, Cook, Hudson, and Northwoods Transfer Stations

A. **Monitor waste water holding tank.** At the Brookston, Cook, Hudson, and Northwoods transfer stations, attendants will monitor the water level in the waste water holding tank. When the tank is nearly full, a green light will turn on inside the office near the electrical panel. When this occurs, contact the septage hauler to pump the contents from the tank (see the Solid Waste Service Providers list).

B. **Monitor loading of the transfer trailers**

See Attachment #19, Loading Transfer Trailers

C. Transfer Stations building

1. Sweep all transfer station floors (tipping room, trailer bay, and office).
2. Wash tipping floor and trailer bay floor, as needed.
3. Secure station hopper safety gates after use by garbage trucks.
4. Examine stationary hydraulic power pack on a weekly basis.
   a. check oil level in sight glass
   b. check hoses
   c. check connectors

5. Examine skid steer loader.
   a. check oil and hydraulic levels at least once per week.
   b. check fuel level before operating the unit.

6. Monitor flammable waste trap and contact the appropriate disposal company to remove contents, as necessary.

7. Transfer trailers are to be filled to their physical capacity, except in those instances when doing so would exceed trailer axle weight restrictions currently in effect. Note that the load is not to extend above the trailer sides, so that the trailer flip screens close completely. This is of particular importance at the Cook Transfer Station, because of the low bridge clearance on the railroad overpass located on Hwy # 53, approximately five miles north of Virginia.

8. Weigh scale operator is to maintain a running total of the net weight of material in the trailer to ensure trailers do not exceed highway weight restrictions.

9. Determine when transfer trailers are ready for transport to disposal site and inform waste haulage contractor. Schedule the haulage so as to maximize allowable trailer weight while minimizing the need to place garbage on the transfer station tipping floor. Keep the transfer trailer haulage contractor informed of the status of your load and the projected date and time that haulage will be needed.

10. If requested, assist waste haulage contractor in positioning the empty trailer under the station hopper. Connect trailer hydraulic hoses to stationary hydraulic power pack.

11. Maintain demolition landfill and canisters according to permit requirements.

12. Operate skid steer loader as needed.

Section 10. Tipping fees, solid waste management tax, & payment options

A. **Tipping fees.** The County charges customers for the disposal of certain types of approved waste materials, while other materials can be disposed of at no charge. Tipping fees are listed in the St. Louis County Solid Waste Tipping Fee schedule (Attachment # 11 & 12). Be certain that you have the current years tipping fee schedule.

Note: there are two sides on the Tipping Fee Schedule, one for residents of St. Louis County (In-Service Area), and the other for non residents (Out-of-Service Area). Tipping fees for Out-Of-Service Area residents are higher, because they do not pay an annual solid waste service fee like St. Louis County residents and businesses do. Customers that own a business, home, or improved recreational property in St. Louis County qualify for the In-Service Area tipping fees.

B. **Solid waste management tax**

A solid waste management tax is charged for waste materials that are placed in both mixed solid waste(MSW) and demolition landfills. MSW and demolition material are taxed at different rates. The applicable tax is included in the "Total Cost" shown in the upper right hand corner of the Solid Waste Tipping Fee Schedule. At weigh scale sites, the computerized LMS automatically records the correct tax for each transaction. Please note the following:

1. Only Federal Government offices and agencies are exempt from this tax; no others are exempt, including non-profit organizations.

2. Currently, all licensed garbage haulers collect the Solid Waste Management Tax from their customers, therefore, they do not pay the tax when they dispose of their waste at our weigh scale sites. The LMS will automatically remove this tax from their tipping fee.

3. Demolition material delivered to the Ash River, Balkan, Comstock, Cotton, Dewey Lake, Embarrass, French Township, Great Scott North, Great Scott South, Kabetogama, Lavell, Makinen, Orr, and Sturgeon canister sites is to be charged under Waste Code 068 (not Waste Code 6 or 8) because this waste is deposited in the Regional Landfill, which requires that the "SWM Tax MSW LF" (17%) be paid, as opposed to the "SWM Tax Demo LF".

4. Beneficial Use Material (Waste Code 039) is exempt from the solid waste management tax. The only source of this material at this time is clean casting sand delivered from Northern Castings in Hibbing, MN. Call the main office for verification before approving this rate for any other customers. The bagged powdery casting sand from Northern Castings does not qualify - it is considered as heavy industrial waste (Waste code 027).

C. Approved payment options

1. Check (personal, business, or money order). Ask the customer to make the check payable to the "*County Auditor*", or use a stamp to imprint the customer's check with the words " County Auditor", on the "pay to the order of" line.

If the check is received at a canister site, process the check manually. Make sure the person's name, address, telephone number and tipping fee amount are correctly written on the check. Stamp it on the back with the endorsement stamp and place it in the envelope used for storing checks in the order received. Submit the check to the Auditors' Office with your daily transaction paperwork.

If the check is received at a weigh scale site, process the check electronically following the SOP for processing checks. Type in the check number on the main screen at computerized sites. Make sure the person's name, address and telephone number are on it, and that it is written for the correct amount. Then stamp it on the back with the endorsement stamp and place it in an envelope used for storing tipping fees. If a self hauler presents a check for $100 or more it will be necessary to write the persons drivers license number on the top of the check.

2. Charge accounts. Charge accounts can be set up for qualified haulers and businesses that deliver their waste only to computerized weigh scale sites. The LMS has updated information from the customer account files maintained through the Auditor's Office in Virginia. If you select credit and the customer account file doesn't permit credit payment you will be told "cash customer". This means this customer must pay by check for this transaction. To set up a charge account, the customer needs to contact the St. Louis County Auditors office at (218) 749-0668. Customers with approved charge accounts can sign their invoices at the end of each day at the operator's discretion. They must be signed every day.

3. Solid waste coupon. Each coupon punch is worth $1.00 in solid waste services. The minimum tipping fee is $1 per transaction. If the total tipping fee is not an even dollar amount, round the number of punches up if the amount is $0.50 or higher and round down if the amount is $0.49 or lower. Punch the correct number of circles in the coupon at 1 punch per dollar, and return the coupon to the customer. If the coupon is completely punched, return it to the customer or recycle it.

Section 11. Processing transactions at canister sites

A. **Determining how to charge for waste at canister sites.** At canister sites, all transactions are based on the number of units of waste delivered to the site (# of bags (32 gal), cubic yards, or units of special waste),

B. **Recording canister site daily transactions.**

All transactions shall be accurately recorded in the St. Louis County Canister Site Transaction Journal (Attachment #7) which is provided at each site. Fill out the form completely, including site name, attendant, date, and page numbers. For each transaction, fill in the Waste Code, Rate, Quantity, and Total Cost for each item delivered by the customer.

Ask the customer if the payment for this transaction will be by coupon or check. Follow the corresponding procedure listed below:

1. Payment by check. Confirm that the check is written for the correct amount. Enter the value of the check in the column labeled **Check Total**. The value of the check must be the same as the number written in the **Total Cost** column. Next, enter the check number from the upper right hand corner of the check in the **Check No.** column. Stamp the check with

the "Pay to the order of St. Louis County" stamp. Place the check in an envelope that holds only tipping fee payment checks from that day. Every time a customer pays for their garbage with a check, place it in this envelope.

2. Payment by coupon. Enter the number of coupon punches in the column labeled **Coupon Punch Total**. The number of punches must be the same as the number entered in the **Total Cost column**.

At the end of the day, add up the **Coupon Punch Total** column and enter the number in the Daily Totals box at the bottom of the page. Next, add up the value of the checks in the **Check Total** column and enter it in the Daily Totals box for checks. Place the white copy(s) of the Canister Site Transaction Journal in the envelope containing the days checks and place it in a large pre-addressed, pre-stamped envelope.

C. Recording Canister Site Waste Category Volumes Report

Complete the St. Louis County Canister Site Waste Category Volumes Report form at the end of the work day. If this form is not present, start a new one and leave it at the site for the next shift. This form should **not** be taken with you. At the end of the business day, enter the following information in column headings listed below on the Canister Site Waste Category Volumes Report:

Day - Enter the day of the week next to the correct date.
Total Staff Hours - Enter the hours you worked at the site that day including the quarter hour opening and closing time and any overtime worked.
MSW Bags - Enter the total number of bags collected in this column by adding up the total in the Quantity box of your daily Canister Site Transaction Journal.
MSW Yd^3 - Enter the number of yards of demolition material collected if any volume based transactions for demolition were completed.
Demo Yd^3 - Enter the number of yards of demolition material collected if any volume based transactions for demolition were completed.

Total Number of Paying Transactions - Enter the total number of paying customers you had in this column. To get this number, add up the total number of paying entries on your Canister Site Transaction Journal sheets for that day.
Total # of Coupon Punches - Enter the total number of punches taken that day in this column. You can get this number from the Daily Totals box on your canister Site Transaction Journal sheets for that day.
Total $ Amount of Checks for Waste Disposal - Enter the total dollar amount for all checks you received for transactions that day in this column. You can get this number from the Daily Totals box for checks on your Canister Site Transaction Journal for that day. This does not include checks received from coupon sales.
Finally - at the end of each month, go down each of the columns and add each entry and enter that in the totals box below each category at the bottom of the page.

Section 12. Processing transactions at weigh scale sites

A. **Determining how to charge for waste at weigh scale sites.** At weigh scale sites, transactions are based on either the number of units of waste delivered to the site (# of bags, cubic yards, or units of special waste), or by weight. Current policy requires if the customer has the equivalent of six bags (32 gallon size) or less of MSW, charge the customer by the number of bags delivered; if more than six (6) bags, charge the customer by weight. If other waste items are in the load, charge for them by weight, except for special waste items which are charged for by the unit (5 tires, etc.).

B. Recording weigh scale site transactions. Every transaction is to be entered into the computerized Landfill Management System (LMS). The procedure for entering transactions is described in the white colored, hardcover "LMS Version 4.0 User's Guide" which is available at all weigh scale sites. Pay particular attention to Section One, the **Four Basic Categories Of LMS Version 4 Procedures** which describes the four options, and shows in step by step sequence how to follow the correct procedure.

Collect an approved type of payment, and offer the customer a receipt. All charge customers are to sign a copy of the receipt for the Department's records. All transactions involving County Self Hauled waste are to have a signed copy of the invoice for the Department's records.

At days end, print two copies of the End of Day Report, justify receipts, download the End of Day Report, and mail large pre-stamped envelop containing End of Day Report, daily receipts and corresponding checks, and coupon sales checks and Coupon Sales Journal pages when needed.

Section 13. Solid waste coupon sales to customers

Customers purchase the solid waste coupons in increments of five, ten, or twenty punches. Each punch is worth $1.00 in solid waste services.

Coupons sold at a solid waste site may only be purchased with a check or money order.
The customer may purchase a coupon with cash, check or money order from a vendor, or from the Department's central office in the Northland Office Building in Virginia.

A. Recording sales in the Solid Waste Coupon Sales Journal

When you sell a coupon to a customer, enter the following information in the columns with the following headings on your Coupon Sales Journal:
Coupon Number - Enter the coupon's number in this column. Note that the twenty punch coupons begin with a C, ten with a B, and five punch with an A.
Amount Received - Enter the amount of money the check was written for.
Check no. or "Cash" - Enter the number on the upper right hand corner of the check. We do not accept cash.
Sold To - Enter the name of the person listed on the check.
Sold By - Enter your name or initials.

Section 14. Submitting daily transactions, coupon sales & volume reports

Mail in daily, weekly, or monthly transactions to the St. Louis County Auditors Office in Virginia. Please place the following items in and mail the 9 ½ " x 12" pre-addressed, postage paid envelope:

A. Regular envelope containing checks for each transaction, in the order they were received.

B. Regular envelope containing checks for coupon sales along with coupon sales journal sheet.

C. At **canister sites**, submit the Transaction Journal pages, top (white) sheet in order. Do not send the carbon copies (green sheets) in when book is completed. Keep them on site for your own records or throw them away.
At **transfer stations**, and the **Regional Landfill** submit one copy of the End Of Day report, one copy of each charge customer invoice, the check for each transaction, in the order they were received.

Take the envelope to the Auditor's Office in Virginia, or to the most convenient U.S. Postal Service mail drop. If it is inconvenient to mail the envelope each day, an envelope containing several days paperwork and checks can be mailed once a week. However, each day's checks must be placed into a separate regular envelope. There is no need to record coupon numbers or send used up coupons back to auditing.

Attendants will remove all unacceptable materials from waste and recycling disposal and storage sites. These materials are to be disposed of in their proper location.

Section 15. Vehicle priority on the weigh scale

Licensed garbage trucks have priority over other vehicles on the weigh scale.

Section 16. Asbestos

Friable asbestos can only be accepted at the Regional Landfill in Virginia. It cannot be accepted at any canister site or transfer station. Because each case is different, work with the Hazardous/Industrial Waste Specialist to determine disposal requirements. (See Attachment # 2, MPCA Asbestos Containing Material Transport And Disposal Manifest.) When friable asbestos is delivered, notify the landfill operator so that it is buried separately, without exposure to landfill personnel.

Section 17. Industrial waste

Industrial waste must be approved by the Solid Waste Department prior to disposal. Numerous industrial wastes require chemical testing to determine whether they can be landfilled.

All waste water treatment plant grit, bar screenings, or other industrial wastes must be free of liquid waste. Free of liquid means that when the material is placed on the ground, no free liquid seeps out of it.

Asbestos and industrial waste cannot be disposed of at a transfer station or the Hibbing roll-off site. These waste can only be accepted at the Regional landfill.

If you have questions regarding a specific waste, contact the Hazardous/Industrial Waste Specialist, or your supervisor before allowing the material to be accepted.

Section 18. Classifying heavy industrial waste

Generally the waste must meet a criteria of weighing at least 1500 pounds per cubic yard. To measure this it will be necessary to weigh a load of industrial waste then determine the cubic volume of the load, i.e., (L x W x H) in feet divided by 27 = cubic yards. Divide the total weight by the total cubic yards to get pounds (tons) per cubic yard. If a business' waste is 1500 pounds per cubic yard or more, charge it as heavy industrial waste (Category 27). The operator will determine if a business waste will be classified as heavy industrial. The HHW/ Industrial Waste Specialist should be notified of any new industrial or heavy industrial waste generators. Send that person the name of the company and a description of the waste being disposed of.

Section 19. Recyclable materials - recycling roll-off program

Accept only # 1 and #2 plastic containers with a "neck", tin and bi-metal cans, aluminum cans, glass bottles, and fiber items such as newspaper (including inserts), magazines and catalogs up to ½-inch thick, boxboard, file folders, and mail items such as envelopes, and writing paper. Containers are to be rinsed and free of food items. Plastic oil containers for motor oil, and food products are not approved even if they are #1 or #2 plastic with a neck, because even a very small quantity of oil causes problems with re-manufacturing these materials. All recyclables are to be placed loose into the roll-off. The customer is to remove recyclables from bags and boxes, and recyclables such as newspaper are not to be tied in bundles.

Section 20 Special wastes

A. Antifreeze

Determine the type of antifreeze the customer has and direct disposal into the correct container. Attendants will monitor incoming antifreeze to ensure that no unacceptable fluids are dumped into the storage tanks. (see Attachment #9). Inform supervisor if any spill occurs. Waste antifreeze structure is to be locked when site is closed. Monitor level in antifreeze containers and contact the recycling company so it can be processed before running out of storage capacity (see Attachment #16 - list of service providers)

B. Appliances (white goods)

Appliances include the following: clothes washers and dryers, dishwashers, hot water heaters, heat pumps, furnaces, garbage disposals, trash compactors, conventional and microwave ovens, ranges and stoves, air conditioners, dehumidifiers, refrigerators and freezers, furnaces, fluorescent light fixtures, submersible pumps.

1. The following major appliances do not require evacuating or the removal of hazardous materials:
   - -Dishwasher, residential
   - -Hot water heater
   - -Garbage disposal
   - -Trash compactors

2. The major appliances that require evacuation and/or the removal of hazardous materials are as follows *(c = Capacitor, m = Mercury switches, f = Freon or other gases, b = Ballasts)*:

-Clothes washers (c,m)
-Clothes dryers (c,m)
-Commercial dishwashers (c,m)
-Residential furnaces (c,m)
-Microwave ovens (c,m)
-Ranges and stoves (if they contain a fluorescent lamp fixture) (b)
-Air conditioners (c,f)
-Dehumidifiers (c,f)
-Refrigerators (c,f)
-Freezers (c,f)

3. In addition, the following contain hazardous materials that require removal:
   -Furnace thermostats (m)
   -Fluorescent light fixtures (b)
   -Submersible pumps (c,m)

4. Inform the customer that all appliances must be set upright in the appliance disposal area.

5. Refrigerators must be manually off-loaded with care taken to protect existing refrigeration lines. Be sure the customer understands that this is a requirement.

6. The customer must remove the doors from all refrigerators and freezers prior to arrival at the landfill, transfer station or canister site.

7. Customers should deliver the refrigeration units to the disposal site with the Freon lines intact.

C. Batteries (lead acid)

All lead acid batteries disposed of at County facilities must be stored upright in the battery box provided for this purpose. The batteries should be placed in the storage box in such a way as to minimize the leakage of battery acid or shorting across the battery terminals.

D. Brush and branches

Brush and branches are to be free of lumber and other demolition material.

E. Electronic appliances (brown goods)

An "electronic" appliance is any appliance used in the home or business that processes and displays information.

Electronic appliances are distinguished from electric appliances by the presence of complex circuitry, circuit boards or signal processing. By contrast, an "electric" appliance uses electricity as a power supply but does not process, transmit, receive, measure, or display information.

Electronics include the following:
- all computers and peripherals
- calculators
- digital clocks
- televisions and video monitors
- copying machines
- stereos and stereo components
- telephones and fax machines
- video cassette recorders and DVDs
- bread makers and automatic coffee makers that have electronic timers

Most of the items above contain one or more of the following materials:
- lead
- mercury
- cadmium
- arsenic
- PCB
- nickel cadmium
- nickel metal hydride
- bromine

Only residentially generated electronic equipment is accepted. Electronic equipment from commercial customers is not to be accepted. Businesses and institutions should call the Minnesota Pollution Control Agency at 651-297-8362 or toll-free 800-657-3864 and ask for the Waste Fact Sheet #4.15, *Managing Waste Electronic Equipment*.

Oil filters

Used oil filters are accepted only at those sites that have facilities to store them in containers provided by the County Contractor (see SLC Waste Facility Services).

G. Oil (waste oil)

When a customer comes with waste oil, the operator is to examine the material the customer intends to deposit into the waste oil tank prior to allowing the customer to continue.

1. If the material is acceptable according to the list below, the operator will remind the customer about care to avoid spills and observe the customer as the material is poured into the tank.

2. If the customer is physically unable to pour the material, the operator may assist.

3. Any spills should be cleaned up immediately.

4. Contaminated oil is very expensive to dispose of as it is then hazardous waste and must be treated as such. If a customer has unacceptable product, inform the customer about the household hazardous waste collection program or suggest that the customer call the current Contractor. All used oil will be tested for high chlorine content before the contractor will accept it. If the used oil is

contaminated with any of the above items, the company will not accept it. If used oil contamination problems occur, this service will be discontinued, so it must be used properly. See the current list of Service Providers.

5. Attendants are to check the tank for any leaks on a monthly basis and record the results in the daily log.

6. Storage tank is to be locked during hours that the site is closed to the public.

Acceptable Waste Oil Products	Unacceptable Waste Oil Products
Crankcase oil	Antifreeze
Turbine Oil	Gasoline
Gearbox Oil	Part Cleaners
Lubricating Oil	Solvents
Transmission Oil/Fluid	Paint Products
Hydraulic Oil	Mineral Spirits
Brake Fluid	Carburetor Cleaners
Cutting Oil	Oil Containing PCB's
2-Cycle Oils	Transformer Oil
* #1 and #2 Fuel Oil	
* Diesel Fuel	
* In 55 gallon quantities or less.	
These products can be mixed with one another.	

H. Scrap metal

These safety requirements must be observed before the customer brings the item to a St. Louis County disposal site.

1. All covers and plugs must be removed from barrels and other metal containers so the operator or attendant can inspect them.

2. All barrels and other containers must be empty and free from explosive vapors. If any liquid or suspected explosive vapors are found during inspection by the operator or attendant, the customer must be told they cannot dispose of the barrel or container until the contents have been safely and appropriately disposed of. If there is a question on how to do this the customer should contact the solid waste office in Virginia.

3. All caps, valves, and plugs must be removed from metal bottles used for the storage of compressed gasses or liquid petroleum (LP) gas. The size of tanks accepted for disposal is determined by the scrap metal contract.

4. Pieces of scrap metal cannot be longer than ten feet in length.

5. Engine blocks must have the oil pan and the oil filter removed before they can be accepted as scrap metal at a St. Louis County disposal site.

6. Gas tanks must be removed from the vehicle, totally dry and with all spouts open.

7. Oil filters are unacceptable in the scrap metal pile. Oil filters are only accepted at those sites with the proper barrels for storage.

8. After the scrap metal pile has been removed be sure that the site is cleaned up of all residue before putting more scrap metal in the area. The residue should be put in the MSW container.
9. Cars and other vehicle bodies are not acceptable.

10. Consult current salvaging policy for allowed removal of scrap metal from St. Louis County Solid Waste sites.

I. Tires

1. The free disposal of up to four qualifying tires is intended for residential customers only. Businesses do not qualify for free tire disposal. Tires from commercial sources include those used on company vehicles.

2. A garbage hauler may collect up to four qualifying tires from each residential customer, and dispose of them at a solid waste disposal site at no charge. The hauler should give the facility operator advance notice before proceeding.

3. Off-road tires are only accepted at weigh scale sites and the appropriate tipping fee will be charged.

   All terrain vehicle (ATV) tires are an exception, and can be accepted at any site that accepts tires because these tires do not contain steel belts and consequently are easy to grind up.

4. Inner tubes can be accepted at no charge at sites that accept tires.

J. Yardwaste

Yard waste includes soft compostable materials such as grass clippings, leaves, garden waste, weeds, plant trimmings. No branches, wood, rocks, glass, or other materials are approved.

Section 21. Unauthorized/unacceptable waste

For purposes of reporting to the Minnesota Pollution Control Agency, the Solid Waste Department staff needs to track any unacceptable waste or unauthorized (illegal disposal) waste that appears at solid waste facilities in St. Louis County.

A. Follow the protocol on the Unauthorized / Unacceptable Waste flow chart in Attachment #3 .

B. When unacceptable waste (hazardous materials, liquid wastes, paint, etc.) or unauthorized waste is found dumped at the facility illegally, record the requested information on the appropriate form.

Section 22. Salvaging/reuse policy

The Department allows salvaging for reuse of scrap metal, wood, and other reusable items.

Customer must sign waiver before salvaging material (Attachment #15). A new waiver is required for each item._

Only one party may salvage at a time.

Salvaging must take place in designated areas. Salvaging is prohibited in the landfill or from waste containers.

Salvaging only allowed during normal business hours. If attendant does not have the time to monitor the activity, salvaging will not be permitted at that time.

No climbing on the scrap pile. Salvaging allowed only if items are within easy reach.

No dismantling of items allowed.

Any mess created during salvaging must be straightened out.

Bulk salvaging of items for scrap value prohibited.

Salvaging done at customers' own risk. County assumes no responsibility for injuries suffered during salvaging or through use of item.

Salvaging must be conducted in a courteous and environmentally protective manner.

Salvaging rights may be revoked for noncompliance.

Section 23. Personal protective equipment policy

A. Clothing

All attendants shall wear clothing which will protect them from incidental injury during work hours. At a minimum the following is required:

1. Orange safety vest when outside buildings
2. Gloves when handling waste
3. Personal protective equipment as per Personal Protective Equipment Policy.

B. Safety footwear

Employees shall be responsible to wear A.N.S.I approved safety footwear at all times at the work site. Footwear must have steel toes, shanks or other equally impregnable material in the toe and sole area. Any employee not wearing A.N.S.I. approved footwear will be sent home on the employee's time and at his/her expense in order to obtain approved footwear. No safety footwear - no work.

Section 24. Attendance at site

All solid waste facility attendants shall be on duty at the assigned solid waste facility at all times during scheduled shift hours. Employees are not to be absent without the prior approval of the supervisor.

Section 25. Facility permits, emergency, and contingency action plans

Attendants will become familiar with facility permits emergency response, and contingency action plans(located at each site in gray, hard covered 3-ring binder), County Solid Waste ordinances, policies, and procedures.

Notification of supervisors. Attendants shall notify their supervisor immediately of any problems or disrepair occurring at or around the solid waste facility.

Section 26. Accident and incident reports

A. Non-Employee Accident Report Form. (See Attachment #5)

Complete immediately after accident has occurred and mail in to the Solid Waste Department office in Virginia as soon as possible. Notify a supervisor immediately.

B. Incident Report Form (See Attachment #13)

Please fill these forms out as soon as possible after any unusual or out of the ordinary incident such as a fire, computer failure, mechanical difficulties, confrontations with patrons or contract employees, waste problems, etc.

Section 27. Miscellaneous

A. Conformance with current laws. Attendants shall comply with all applicable county, state, and federal statutes, rules, regulations, licenses, and ordinances and all amendments thereto.

B. Conformance with County policies. Solid Waste facility attendants will perform work activities in conformance with all St. Louis County policies and with the procedures set forth in this SOP.

C. Attendants will become familiar with Solid Waste Department Waste Resource guidebook and keep it updated.

D. Discrimination. Attendants are required to perform services on behalf of the County in a professional and ethical manner, providing good service to all customers, regardless of race, creed, color, religion, age, sex, disability, marital status, public assistance status, sexual orientation or national origin.

E. Gifts. No County employee shall accept monetary tips, nor shall they accept gifts of any kind which exceed $25.00 in value.

Section 28. Definitions

Acceptable waste. These waste items are accepted, providing the facility is approved to handle them. Attendant will determine the waste type and charge the appropriate tipping fee.

Construction debris. Construction debris means waste building materials, packaging, and rubble resulting from construction, remodeling, and repair of buildings and roads.

Demolition debris. Demolition means solid waste resulting from the demolition of buildings, roads, and other man-made structures including concrete, brick, bituminous concrete, untreated wood, masonry, glass, trees, rock, and plastic building parts. Demolition does not include asbestos wastes.

Note: The MPCA permit for the Hibbing Demolition landfill also includes cutoffs of gypsum board (sheet rock), and lumber in the materials accepted in these facilities.

Mixed Solid Waste (MSW). MSW means garbage, refuse, and other solid waste from residential, commercial, industrial, and community activities that the generator of the waste aggregates for collection, but does not include auto hulks, street sweepings, ash, construction debris, mining waste, sludges, tree and agricultural wastes, tires, lead acid batteries, motor and vehicle fluids, and filters, and other materials collected, processed, and disposed of as separate waste streams, but does include source-separated compostable materials.

Special Wastes. Attendant will accept approved special wastes providing the disposal site has a designated collection area for these items. Limitations may apply (see Tipping Fee schedule). Special wastes cannot be placed in a transfer trailer, MSW or demolition canister, or buried in the landfill. Approved special wastes include:

- lead acid batteries
- waste oil
- tires
- yard waste
- appliances
- scrap metal
- brush
- engine oil filters
- fluorescent tubes(4 ft.)
- electronics
- antifreeze

Unacceptable waste. These wastes are not acceptable at any site. Advise customers of the options available for proper disposal. Unacceptable wastes include, but are not limited to the following:

- hazardous waste (ignitable, oxidizer, corrosive, reactive, capable of leaching heavy metals or other contaminants, or pesticides)
- free liquids or wastes containing them
- regulated infectious waste - medical or veterinary
- untreated sewage waste (unless approved in the industrial waste plan)

- radioactive waste
- hot wood ashes
- any waste or waste container bearing a hazardous waste placard
- unapproved industrial waste
- MSW incinerator ash (except at the Regional Landfill)
- PUC ash (except at the Regional Landfill)
- asbestos (except at the Regional Landfill)
- * rechargeable batteries
- * button batteries
- * mercury containing wastes

* These items are banned from disposal in MSW landfills. St. Louis County offers household hazardous waste collections which will accept them. Refer to the Solid Waste Resource guide for current disposal information.

TAB D

St. Louis County Regional Landfill

Industrial Solid Waste Management Plan

April 2011

Table of Contents

1 Introduction 4
1.1 General 4
1.2 Plan Objectives 4
1.3 Regulatory Requirements 4
1.3.1 Procedures 4
1.3.2 Special Waste Categories 5
1.3.3 Unacceptable Wastes 5
1.3.4 Plan Amendment 5

2 Disposal Facilities 6
2.1 Background 6
2.2 Facility Description 7
2.3 Facility Construction 7

3 Operating Requirements 8
3.1 Personnel 8
3.2 Waste Transport Trucks 8
3.3 Phase Development 8
3.4 Leachate Collection and Treatment 9
3.5 Cover Requirements 9
3.6 Waste Tire Storage 9
3.7 Classifying Heavy Industrial Waste 9
3.8 Industrial Waste Management 10
3.8 Household Hazardous Waste Plan 10
3.10 Air Quality Protection 10
3.11 Annual Report 10

4 Industrial Solid Waste Management Procedure 10
4.1 Notification Procedures 11
4.1.1 Generator Waste Plan Form 11
4.1.2 Industrial Waste Evaluation Form 11
4.2 Industrial Waste Evaluation Process 11
4.2.1 Industrial Waste Evaluation Classification 12
4.2.1.1 Waste Chemical Evaluation - Annual or More 12
4.2.1.2 Waste Chemical Evaluation - 3 years 12
4.2.1.3 Waste Evaluation - 5 years 12
4.2.2 Reuse of Generated Waste 13
4.2.3 Incompatible Waste 13
4.2.4 Chemical Characteristics of Waste 14
4.2.5 Material Safety Data Sheets 14
4.2.6 Toxicity Characteristic Leaching Procedure (TCLP) Test 14
4.2.7 Synthetic Precipitation Leach Procedure (SPLP) Test 16
4.2.8 Paint Filter Liquids Test 16

4.2.9 Chemical Composition Analysis 16
4.2.10 Ignitability, Corrosivity, Reactivity Characteristics and DRO/GRO 17
4.2.11 Other Chemical Properties Impacting the Spray Field 17
4.2.12 Laboratory Results 18
4.2.13 County Waste Evaluation Decision Tree 19
4.3 Record Keeping 19
4.3.1 Approval Letters 19
4.3.2 Industrial Waste Tracking Forms 19
4.3.3 Waste Inspection 20
4.3.4 Operating Record 21

5 Waste Management Policies 21
5.1 Acceptance Criteria 21
5.2 Unacceptable Waste 22
5.3 Specific Waste Categories 23
5.3.1 Empty Pesticide Containers 23
5.3.2 Asbestos 23
5.3.3 Waste Containing PCB=s 24
5.3.4 Spilled Nonhazardous Materials 24
5.3.5 Spontaneously Combustible or Ignitable Wastes 25
5.3.6 Foundry Wastes 25
5.3.7 Incinerator Ash and Coal Dust 26
5.3.8 Paint Residues and Dust, Sandblasting Waste and Sand Filters 26
5.3.9 Sludges 27
5.3.10 Ink Sludges, Solvents, and Clean-up Materials 27
5.3.11 Rendering, Slaughterhouse and Deer Wastes 27
5.3.12 Fiberglass, Urethane, Polyurethane, and Epoxy Resin Waste 28
5.3.13 Spent Activated Carbon Filters 28
5.3.14 Machining Wastes 29
5.3.15 Oil-Soaked Rags and Towels 29
5.3.16 Burned Out Buildings 29
5.3.17 Medical Wastes, Medical and Veterinary Sharps 29
5.3.18 Railroad Ties, Green-Treated wood 30
5.3.19 Other Wastes 30
5.4 Demolition Waste 30
5.5 Household Hazardous Wastes 31
5.6 Special Wastes 31
5.7 Executive Summary 31

Appendix A	Generator Waste Plan (GWP)
Appendix B	Industrial Waste Evaluation Form
Appendix C	Waste Generator Evaluation Process Flowchart
Appendix D	Industrial Waste Approval Letter
Appendix E	Industrial Waste Rejection Letter
Appendix F	St. Louis County Leachate Threshold Limits
Appendix G	Characteristics of Ignitability
Appendix H	Characteristics of Corrosivity
Appendix I	Characteristics of Reactivity
Appendix J	St. Louis County Industrial Waste Decision Flow Chart
Appendix K	Industrial Solid Waste Tracking Form
Appendix L	Regional Landfill Waste Rejection Form
Appendix M	Regional Landfill Weekly Industrial Waste Inspection Sheet
Appendix N	Empty Pesticide Container Triple Rinse Certificate
Appendix O	MPCA Asbestos Manifest and Instructions

1 Introduction

1.1 General

This Industrial Solid Waste Management Plan has been prepared to conform with Minnesota Pollution Control Agency (MPCA) Rules, Part 7035.2535, Subpart 5. The plan provides a framework specifically for St. Louis County to properly evaluate, document, and handle various industrial solid wastes received at its solid waste management facilities.

The St. Louis County Regional Landfill (RLF) serves all areas of St. Louis County except those areas served by the Western Lake Superior Sanitary District (WLSSD). In the past, the MPCA reviewed and approved industrial solid waste disposal requests on a case-by-case basis through the codisposal program. The rules have now placed the responsibility for industrial solid waste management with the operator or permittee of the landfill site or processing facility. Thus, the responsibility falls solely into the jurisdiction of St. Louis County, with oversight by the MPCA.

St. Louis County=s management policies on waste management are based on the capacity to manage the potential risks associated with the wastes. A more detailed description of the facility is provided in Section 2.

1.2 Plan Objectives

The principle objective of this comprehensive industrial solid waste management plan is for St. Louis County to identify, evaluate, and document industrial solid wastes received and disposed of at the county facility. Another underlying intent is to assure that all industrial solid waste accepted at the RLF site are managed in accordance with acceptable standards of care for employee health, safety, and environmental considerations.

1.3 Regulatory Requirements

Preparation and implementation of this industrial solid waste management plan is required by Minnesota Rules part 7035.2535, subpart 5. St. Louis County has met these as follows:

1.3.1 Procedures

St. Louis County has prepared an industrial solid waste plan to manage all industrial generated waste that is to be received at the facility including:

! Procedures for notifying industrial solid waste generators and haulers of the operation and restrictions for using the facilities for their wastes.

! Procedures for submitting a request for disposal and the measures to be taken to inform generators and haulers of the proper measures to be taken.

! Procedures for tracking all industrial solid wastes to be disposed of at the facility. All wastes must be evaluated and approved prior to transport into the facility. By the way of the notification process, the intent is to have all generators and haulers thoroughly understand the evaluation process thereby minimizing the confusion associated with delivery of unapproved loads.

! Procedures for evaluation of waste characteristics, including specific analyses for designated wastes.

! Procedures for identifying any special management requirements, and the standards for accepting or rejecting a waste based on its analysis, volume, and characteristics.

! Procedures for inspecting industrial solid waste as it is delivered and the standards for accepting or requiring further information and review of previously approved and unapproved waste as it is delivered.

1.3.2 Special Waste Categories

The industrial solid waste management plan addresses how the following categories of waste will be managed to comply with the requirements of item 1.3.1:

! empty pesticide containers;
! asbestos;
! waste containing polychlorinated biphenyls at a concentration of less than 50 ppm;
! spilled non-hazardous materials;
! wastes that could spontaneously combust or that could ignite other waste because of high temperatures;
! foundry wastes;
! ash from incinerators, resource recovery facilities, and power plants;
! paint residues, paint filters, and paint dust;
! sludge-including ink sludge, lime sludge, wood sludge, and paper sludge;
! fiberglass, urethane, polyurethane, and epoxy resin waste;
! spent activated carbon filters;
! rendering and slaughter house wastes;
! demolition wastes; and
! any other wastes that can be identified.

1.3.3 Unacceptable Wastes

St. Louis County will further indicate in the plan those industrial solid wastes that will not be accepted at the facility.

1.3.4 Plan Amendment

The County will amend the industrial solid waste management plan whenever the practices or wastes identified above have changed. It is St. Louis County=s responsibility to submit plan amendments to the MPCA for review. The County will update elements of the plan as needed to assure that the industrial solid waste handling procedures are current with state and federal requirements.

2 Disposal Facilities

2.1 Background

The St. Louis County Regional Landfill, Permit # SW-405, a municipal solid waste land disposal facility, is located in the groundwater region known as the Superior Upland Region. The facility is constructed on a relatively flat-topped series of mine dumps on a 29 acre parcel of land in the northeast quarter of Section 10, Township 58 North, Range 17 West, St. Louis County. The site is 2.5 miles north of the MN Hwy 135 within the city limits of Virginia, adjacent to the east limit of the Virginia Corporate Boundary.

The waste management facility consists of composite lined solid waste cells with leachate collection and leak detection systems, and an on-site leachate treatment with aeration ponds and spray irrigation treatment application. The physical geography of the site consists of bedrock topography, with hills of the Laurentian Divide sweeping south and north on a horseshoe shape, known as the Virginia Horn. The north side of the Divide slopes toward the center of the horseshoe, where the perennial Pike River flows northeast, approximately 1.3 miles east of the site. The area is the headwaters of the Pike River, with headwater wetlands perched on bedrock surfaces. Soils classified as stony drift of loamy sand to sandy loam have been developed on thin glacial deposits. The Pike River drains these forested uplands and forested wetlands with a relatively flat stream gradient as it leaves the area, flowing approximately 34 miles to Lake Vermilion on its way to the lakes along the Minnesota-Ontario Border.

The service area for the St. Louis County Regional Landfill includes all areas of St. Louis County not serviced by the Western Lake Superior Sanitary District. This includes the city of Duluth and surrounding townships. The waste stream generated within this service area is a mix of residential, commercial, and industrial wastes.

Residential waste is defined as the solid waste from an individual homeowner=s residence; commercial waste is solid waste picked up at apartment houses, office buildings, shopping centers, etc.; and industrial waste is generally defined as the waste that is generated from an industrial or manufacturing process and solid waste generated from non-manufacturing activities such as service or commercial establishments.

There are five transfer stations and twenty canister sites located in St. Louis County. In general, canister sites do not accept industrial waste. However, a limited amount of industrial waste can be received at the transfer stations from certain generators on a pre-approved basis.

The St. Louis County Regional Landfill has been in operation since November 1993 and has a currently permitted fill capacity projected through 2010. The facility handles approximately 100,000 cubic yards of solid waste, industrial waste and cover material annually. The fill technique that is used at this facility is referred to as the area method. The waste is spread and compacted over the drainage layer, and usually surrounded by a berm. The landfill operator must exercise control of the waste itself and the moisture in the fill area. This is particularly important with the handling of industrial wastes.

2.2 Facility Description

The facility is permitted by the Minnesota Pollution Control Agency for the disposal of industrial and mixed municipal solid waste. The area permitted for industrial and mixed municipal solid waste disposal is limited to a 29 acre portion of the facility. The 29 acre disposal area design provides for a total development plan capacity of 1,990,000 cubic yards over the life of the current landfill. The design provides that the waste be placed in Cells numbered I through V until the landfill reaches final capacity in approximately 2011 based on current fill rates.

2.3 Facility Construction

A liner and leachate collection system is installed beneath the industrial and mixed municipal solid waste disposal area in accordance with approved plans. The liner is compatible with the waste and leachate system and shall retain its efficiency for at least 20 years after closure.

The disposal area was constructed with a 60 mil thick HDPE synthetic membrane liner placed under the disposal area. A 24 inch layer of compacted clay soil with a permeability not greater than 1×10^{-7} cm/sec was placed below the synthetic membrane for additional leak protection as depicted on the approved plans. This low permeability clay soil layer was compacted at a minimum of 98 percent standard proctor density. A 12 inch thick drainage layer of select soils is placed over the entire liner. The drainage layer has a minimum coefficient of permeability of 1×10^{-3} cm/sec.

At the bottom of the drainage layer, leachate collection lines were installed. These collection lines consist of a network of 6" HDPE pipes which direct leachate into 8" Header Pipes connected to concrete manholes located within the landfill. Leachate collected in the manholes is pumped to the first of two leachate treatment ponds. All leachate collection pipes not within the lined area that are transmitting leachate to a manhole or the storage and treatment ponds consist of HDPE pipe encased inside a second HDPE pipe.

A lysimeter system was installed below the cell liner at the lowest point of each collection pipe trench in each cell of the disposal area to detect possible leakage from the liner.

The Leachate Treatment System consists of a two cell aerated ponds designed to hold approximately 10 million gallons of leachate and provide for 260 days of storage based on the peak generation rate estimates. The ponds have a composite liner consisting of a 60 mil HDPE artificial liner and 2 feet of clay soil having a permeability not greater than 1×10^{-7} cm/sec. A leak detection system is situated beneath the composite liner and consists of a 4 inch SDR 17 perforated HDPE pipe within a drainage layer above a 40 mil HDPE artificial liner which extends beneath the two ponds.

A spray irrigation system for final management of the treatment pond effluent consists of a pump station and forcemain and a 21 acre spray area consisting of 16 spray heads in the north spray field, 6 heads in the south spray field, and 6 auxiliary spray heads lining the west and north perimeter of the leachate aerated treatment ponds. The irrigation area is located immediately north of the solid waste disposal area within the 160 acre facility.

A sedimentation basin is constructed according to approved plans and will adequately settle suspended soil particles from otherwise clean run-off water coming from areas that have intermediate or final cover.

3 Operating Requirements

3.1 Personnel. A certified solid waste disposal operator must be present at the facility during operating hours as required by Minnesota Rules parts 7048.0100 to 7048.1300. At a minimum a Class C certified wastewater treatment facility operator is required to operate the leachate treatment and final disposal system. All facility personnel are trained regarding proper procedures relevant to their positions including Contingency Action Plan implementation and how to deal effectively with solid waste and wastewater problems at the site. Instructions on safety procedures and health risks are provided for all facility personnel.

A copy of the approved Contingency Action Plan is available at the Facility at all times for use by the operator and facility personnel.

3.2 Waste Transport Trucks. The site operator will not accept ash, industrial waste or mixed municipal solid waste from any waste generators that do not meet the requirements of the St. Louis County Industrial Solid Waste Management Plan.

3.3 Phase Development. Filling shall proceed in accordance with the approved plans so as to establish final elevations as soon as practicable.

All areas of the liner system must have at least six feet of solid waste and/or a material with equivalent insulating value in place on the liner prior to December 31 of each year to protect against frost damage to the liner system.

If inclement weather conditions prohibit spreading and compaction of waste, short-term storage areas within the lined area may be used until conditions improve.

If snow removal is necessary within the working area, the snow must be stockpiled within the lined area.

All leachate collection lines must be cleaned and flushed on an annual basis.

3.4 Leachate Collection and Treatment. All leachate is collected and treated in the aerated treatment ponds and then pumped to the spray irrigation disposal area for disposal, or will be treated and disposed of by some other MPCA approved leachate treatment method. The leachate quality will be tested according to the requirements of the permit application and the results submitted to the Commissioner as part of the annual report specified in section 1.5.2 of the permit. Delivery to and introduction into any municipal wastewater treatment facility will be as specified in an MPCA approved Leachate Treatment Agreement between the municipal wastewater treatment facility and county.

3.5 Cover Requirements. All fill areas must be developed and covered according to the approved Development and Closure Plans. The following types of cover must be applied at the site:

! Daily. All areas of working face for the mixed municipal solid waste area are covered on at least a daily basis with six inches of compacted cover.

! Intermediate. Intermediate cover must be placed in areas where waste will not be placed within 30 days. Intermediate cover consists of a foot of low-permeability soils. Areas that will not receive additional waste or final cover for more than 180 days should be seeded and/or mulched to prevent excessive erosion.

! Final. The final cover placement will be an ongoing process as the development of areas of the fill reach final contours. The final cover will consist of a 12 inch thick, compacted intermediate cover/buffer soil layer, a barrier layer of 40 mil very low density polyethylene (VLDPE) flexible membrane, a nine-inch thick lateral drainage layer of high permeability material overlaying the barrier layer, a 9-inch thick general fill layer, and a 6-inch thick topsoil layer. The cover soils overlaying the sand layer must be capable of sustaining shallow-rooted vegetation, and the top portion will consist of at least six inches of topsoil. The final cover must then be seeded and mulched to prevent erosion.

3.6 Waste Tire Storage. Tires will not be accepted at the facility in material quantities. Material quantities of tires will be separated out of the solid waste and directed to separate facilities. No more than 10,000 tires may be stockpiled at the facility without a separate permit for this purpose in accordance with Minnesota Statutes ' '115A to 115A.906. Tires will be stored in a separate marked area.

3.7 Classifying Heavy Industrial Waste. Generally, the waste must meet a criteria of weighing at least 1,500 pounds per cubic yard. To measure this it will be necessary to weigh a load of industrial solid waste, then determine the cubic volume of the load, i.e., (L x W x H) divided by 27 (= cubic yards). If a business= waste is 1,500 pounds per cubic yard or more, it is charged as heavy industrial solid waste (Category 27). The operator can determine if a business= waste will be classified as heavy industrial waste, but usually the business will find the density of the waste after referring a sample to a certified laboratory, before the waste is brought to the RLF. The St. Louis County Solid Waste Office should be notified of any new industrial or heavy industrial solid waste generators in its= service area.

3.8 Industrial Waste Management. All industrial solid waste delivered to the Regional Landfill will be managed in accordance with the approved St. Louis County Industrial Solid Waste Management Plan.

3.9 Household Hazardous Waste Management Plan. A household hazardous waste management plan has been submitted and approved in accordance with Minnesota Statute '115A.96.

3.10 Air Quality Protection. The Operator will operate and maintain the Facility in conformance with MPCA air pollution control rules and in compliance with Minnesota Rules part 7035.2565, subpart 3. Open burning of solid waste is prohibited.

3.11 Annual Report. An annual report is submitted by February 1 of each year for the preceding year. The annual report provides a summary of the year=s activities at the Facility including:

- Permit number, name, and address of the solid waste management facility.
- The year covered by the report.
- Type and quantity of each type of waste handled by the facility.
- A determination of the remaining capacity for storage or disposal based on the amount of waste received at the Facility and the original capacity approved.
- Charge rates at the Facility and anticipated changes for the upcoming year.
- The most recent cost estimates for closure, contingency action, and post closure care.
- A review and discussion of the adequacy of the facility closure, contingency action, and post closure care plans.
- A summary report on the ground and surface water monitoring program.

- Demolition materials records including quantities of wastes received.
- A record of all internal and external personnel training and certification.
- A certification as to the accuracy of the information contained in the annual report.
- Volumetric survey and cross-sections.

4 Industrial Solid Waste Management Plan

The purpose of the Industrial Solid Waste Management Plan (ISWMP) is to outline procedures to identify, document, and dispose of nonhazardous industrial solid waste.

4.1 Notification Procedures

The generators of industrial wastes must notify the County of industrial wastes to be disposed of at the RLF. In an effort to inform generators of their obligations, the County attempts to identify all of the generators of industrial waste in the service area. Generators are identified from:

- Past records
- Waste haulers
- Phone directory
- Staff referrals
- County Auditor records

4.1.1 Generator Waste Plan Form

The County solicits a Generator Waste Plan (GWP) which requests the generators review their waste streams and return an inventory of the types and quantities of wastes produced, and where these wastes are disposed. This GWP (Appendix A) must be completed every five years. If a more specific industrial waste evaluation is needed, the generator is sent an Industrial Waste Evaluation Form for that specific waste stream.

4.1.2 Industrial Waste Evaluation Form

Based on the results of the GWP, the County will require an Industrial Waste Evaluation Form (Appendix B) to be completed for each separate industrial waste stream.

4.2 Industrial Waste Evaluation Process

The generator must supply all pertinent information about the wastes they produce. The information on the Industrial Waste Evaluation Form is divided into four categories:

- Generator Information: company name and address;

! Physical Characteristics of Waste: waste name, generating process, quantity, physical state, and packaging;
! Chemical Properties of Waste: chemical analyses; and laboratory test results for required analytical tests;
! Certification: the generator certifies that the information is complete and accurate.

The generator shall complete a separate Industrial Waste Evaluation Form for each industrial solid waste. Additionally, Material Safety Data Sheets (MSDS=s), appropriate to each waste type shall be submitted to the County, along with any test data confirming the physical and chemical nature of the waste. It is the responsibility of the generator to appropriately evaluate its= own waste. It is also the responsibility of the generator to supply the County with accurate information needed to appropriately evaluate a waste. This can be done by following the Waste Generator Evaluation Process Flowchart(Appendix C).

When the information is received, it is reviewed by County staff for completeness and accuracy. Incomplete forms are returned to the operator and requests for additional information will be made as necessary. If the County questions the validity of analytical data, physical description or quantity information, the County reserves the right to not accept the waste material and to request additional information or clarification.

If the County finds this Industrial Waste is acceptable for disposal at the RLF, an acceptance letter (Appendix D) will be written to the generator. If not, a denial letter (Appendix E) will be written, which states reasons for the wastes= denial.

4.2.1 Industrial Waste Evaluation Classification

Based on the types and quantities of waste produced, generators are given a classification which will determine the minimal frequency of future evaluations. Unless a waste is well known, it will need at least some initial testing.

4.2.1.1 Waste Chemical Evaluation - Annual or More

! Wastes that are highly variable in chemical content.
! Wastes that are close to acceptance standards (such as Leachate limits).
! Wastes created by a deliberately changed generating processes.
! Wastes that require more testing due to other state or federal guidelines.
! Wastes that are brought in a large quantity(+1,000 tons annually).
! Wastes which chemical content is completely unknown.

This will determine if increased testing is needed for these wastes to be accepted at the Regional Landfill. The testing timeline can vary from annual testing of the waste, to each individual batch being tested for acceptability as an industrial waste. For Example: Foundry Wastes (casting sand) being used as Beneficial Use Material will be tested on a

semi-annual basis. Any waste-generating process that is changed by the producer will require a re-submission of the Industrial Waste Evaluation Form, and new chemical testing of that waste generated from that particular changed process.

4.2.1.2 Waste Chemical Evaluation - 3 Years

Some industrial wastes are of higher volumes but generally remain consistent and essentially unchanged over the years. Wastes such as these would include refractory brick, or bar and grit screenings. These wastes will be tested at least every three years.

4.2.1.3 Waste Evaluation - 5 Years

Some industries only generate commercial wastes, or wastes that are relatively inert. The County will minimally require completion of the Generator Waste Plan. Depending on the type of wastes generated, an Industrial Waste Evaluation may need to be completed, as well as MSDS sheets of that waste sent to the County for evaluation.

4.2.2 Reuse of Generated Waste

One of the first items to check is the Areason for disposal.@ If a material is indicated as being off-spec, damaged, or out of date, the material may be of use to some other industry that is not concerned if the material is not in perfect condition. In these cases, the County should refer the generator to the Minnesota Technical Assistance Program (1-800-247-0015) or the Materials Exchange. Either source may find a way to recycle the waste.

4.2.3 Incompatible Waste

If the waste cannot be recycled, the form can be reviewed to determine if any physical properties of the waste are incompatible with the facility design and operation. Some examples of when the physical characteristics of the waste may limit its acceptance are:

- Delivery of a large volume of waste at one time, overloading landfill management capacity;
- Delivery of a wet or bulky waste that cannot be handled with existing facility equipment;
- Delivery of an excessively dusty waste that may create health or air quality problems;
- Delivery of a waste that releases an unacceptable vapor
- Inadequate storage space to stockpile a waste until it can be used if the operator intends to incorporate the waste into the cover system at a land disposal site;

! Wastes containing free liquids must be avoided, and all waste containers shall have holes on the top and bottom.

! Wastes having chemical properties that upon leaching may negatively interfere with the capacity of the RLF and the leachate treatment system field to properly function.

! Waste containers that contain some free liquids or other original wastes and may be legally empty, but still have enough residue to negatively impact the Regional Landfill or its leachate treatment system.

! The physical properties of the waste(ex: dusty, friable, or fumes), may lead to an exposure to the landfill staff or contractor above Personal Exposure Limits (PEL) for that material or its= components.

! The waste contains unacceptable concentrations of contaminants not listed under the Leachate Threshold Limits Table (Appendix F) of the facility solid waste permit.

4.2.4 Chemical Characteristics of Waste

St. Louis County staff reviews the existing information on the chemical properties of the waste to determine whether or not it will cause any potential problems such as incompatibility with liner systems, leachate treatment, air quality, or potential adverse impacts on the general health and safety of facility personnel. This review may be brought to another consultant familiar with lined landfills. The chemical properties of the waste can be determined by accepted analytical procedures. The sampling and testing procedures have been developed and implemented by the EPA and MPCA for characterizing wastes. The generalized list of appropriate analytical tests and information is as follows:

! Material Safety Data Sheet

! Toxicity Characteristic Leaching Procedures (TCLP) Test

! Synthetic Precipitation Leach Procedures (SPLP) Test

! Paint Filter Liquids Test

! Chemical Composition Analysis

An additional explanation of the test procedures or evaluation criteria is in the following.

4.2.5 Material Safety Data Sheets (MSDS=s)

The information on a MSDS can be used to determine the properties of a waste material produced from a known raw or finished product, which includes: physical, chemical, and toxic properties of the material; what to do if a spill occurs; and first aid, disposal and emergency information.

The MSDS must list all hazardous ingredients contained in a raw product and are generally found in Section II of the MSDS. This information can be helpful by identifying what chemicals to test for in a waste. For example, if a MSDS for a paint lists Pb or Cr as ingredients in the paint, then a waste containing that paint should be tested for the two metals.

When no MSDS is available and very little is known about the waste or generating process, broader chemical analysis will be required.

4.2.6 Toxicity Characteristic Leaching Procedure (TCLP) Test

A leach test determines what elements or compounds will move out of a waste into a liquid. Leach tests were designed to simulate what happens when a waste is placed in a landfill disposal facility, and thus assists in the evaluation of potential impacts from land disposal of the waste.

This test is one way to classify a waste as hazardous. If the waste has a potential to leach an unacceptable concentration of toxic chemicals to the ground water and thereby pose a significant hazard to human health or the environment, it is a hazardous waste.

The waste is put into an acetic acidic (pH = 4.9) solution, agitated for 18 hours and the concentrations of various pollutants are measured. The results are compared to established hazardous waste limits. If the test results are higher than the limits, the waste is hazardous. The pollutants and their corresponding limits are listed in Appendix F. The County has TCLP waste limits that are less than MPCA hazardous waste limits. Wastes will be TCLP tested on listed Resource Conservation and Recovery Act (RCRA) chemical wastes, unless it is reliably determined that such chemicals are excluded from the industrial waste.

Any waste identified as hazardous by this procedure will not be accepted at the landfill. A waste can be classified as non-hazardous according to its TCLP test, and still be unacceptable for disposal at St. Louis County=s Regional Landfill, based on the County=s Leachate Threshhold Limits.

RCRA TCLP-listed pollutants can be divided into four categories:

! Metals
! Volatile Organics
! Semi-Volatile Organics

! Pesticides and Herbicides

Metals	Herbicides & Pesticides
Arsenic	2,4,5 - TP (Silvex)
Barium	2,4 - D
Cadmium	Chlordane
Chromium (metal & Cr (VI))	Endrin
Lead	Heptachlor (& Hydroxide)
Mercury	Lindane
Selenium	Methoxychlor
Silver	Toxaphene

Volatile Organic Compounds	Semi-Volatiles
1, 1-Dichloroethylene	2, 4, 5-Trichlorophenol
1, 2-Dichloroethylene	2, 4, 6-Trichlorophenol
1, 4-Dichloroethylene	2, 4-Dinitrotoluene
Benzene	Cresol
Carbon Tetrachloride	m-Cresol
Chlorobenzene	0-Cresol
Chloroform	p-Cresol
Methyl Ethyl Ketone	Hexachloro-1, 3-butadiene
Tetrachloroethylene	Hexachlorobenzene
Trichloroethylene	Hexachloroethane
Vinyl Chloride	Nitrobenzene
	Pentchlorophenol
	Pyridine

Based on existing information (MSDS=s, previous test results, a detailed description of the process generating the waste), some categories may be eliminated from testing because of the unlikelihood that they would be present. If there is very little or no information about the waste or generating process, more or all of the TCLP categories will have to be tested for.

4.2.7 Synthetic Precipitation Leach Procedure (SPLP) Test

The SPLP test is used to simulate the leaching that would result when a waste is placed in a more neutral pH environment. Examples of a neutral environment would be a demolition debris land disposal facility, monofill or a separate area at a mixed MSW facility away from household refuse. In these situations, the environment is normally neutral because the wastes do not form strong acids as they decompose.

These procedures are similar to the TCLP test, the main difference between them is the pH of the extracting solution of sulfuric and nitric acid (pH 4.2 for the SPLP test). However, most regulatory limits are based on TCLP data, and therefore the SPLP test will be sparingly used.

4.2.8 Paint Filter Liquids Test

The EPA has developed a test to determine if a waste contains free liquid. This test is called the paint filter liquids test. The test procedure consist of placing 100 mg of sample in a standard 400 micron conical paint filter for five minutes. If any liquid drains from the sample in five minutes, the material contains free liquid. This test can be useful in evaluating a wet waste like a sludge. The landfill will not accept waste containing any free liquid. Visual inspection by the landfill operator of flowing liquids will also disqualify a waste from disposal at the Regional Landfill.

4.2.9 Chemical Composition Analysis

By knowing the chemical composition of a waste, the operator can identify chemical elements that may be harmful to the environment or facility operations. In this respect, a chemical composition is similar to a MSDS.

Generally, a full scale chemical composition of every element in the waste is not needed. Most waste generators are familiar with their generating process, waste products and have MSDS=s on hand for the raw materials used in the process.

This information helps narrow the type of additional testing necessary, if any. For example, the MSDS=s or a description of the waste generating process may indicate that no organics, nickel, or cyanide are used in the process. Then it is unnecessary to test for these elements in a chemical composition or leach test.

However, a full-scale chemical composition should be performed when:

1. very little is known about the waste;
2. the generating process is unknown;
3. there are no MSDS=s available for the raw product or final waste;
4. a bad batch of product is generated and the generator does not know the raw materials that went into the product; and
5. someone wishes to dispose of some unknown material from a spill cleanup or abandoned drums of waste.

4.2.10 Ignitability, Corrosivity, Reactivity Characteristics and DRO/GRO

Other chemical tests that may be performed to test for hazardous waste characteristics are pH, flashpoint, reactive sulfide, reactive cyanide and DRO(diesel range oils)/GRO(gas range oils). The acceptance limits are as follows:

Test	Acceptance Limits
pH	4.0 - 12.0 units
Flashpoint	+ 140E F
Reactive Sulfides	=< 50mg/l
Reactive Cyanides	=< 5 mg/l
DRO levels	=< 1000 mg/l
GRO levels	=< 1000 mg/l

DRO/GRO limits will be applied only to contaminated soils, and then may only be one of a variety of tests used for that soil. Wastes exhibiting properties above these limits will not be accepted at the landfill.

The characteristics of ignitability, corrosivity, and reactivity are further described in the following appendices:

! Appendix G: Characteristics of Ignitability
! Appendix H: Characteristics of Corrosivity
! Appendix I: Characteristics of Reactivity

4.2.11 Other Chemical Properties Impacting the Leachate Spray Field

It may be determined that the chemical nature of the waste may negatively impact the vegetation on the Leachate Spray Field, thereby diminishing or destroying the ability of the Leachate Spray Field to properly irrigate the landfill=s leachate. Waste containing these properties can be denied permission to be disposed of at the RLF.

4.2.12 Laboratory Results

The reliability of the information gathered during the waste evaluation process depends on the reliability the collected samples, and of the laboratory conducting the tests. Erroneous test data can result in the operator accepting a waste or mismanaging the waste to cause an adverse operational or environmental impact. The operator must have some assurance that the laboratory results are accurate.

Laboratory certification for the procedures used should provide this assurance. Other methods for evaluating the reliability of a laboratory include reviewing a quality assurance plan, checking with other operators regarding the laboratory they use, or relying on the review of the EPA and the Minnesota Department of Health (MDH). The MDH maintains a certified list of testing laboratories and the services they provide. They can be contacted at (612)-676-5200 or on the internet at mdh.lab@health.state.mn.us.

In addition to considering the validity of the laboratory test results, the operator should be aware that the results can be misleading if the test sample is not representative of the entire waste stream.

One way the County can be assured that a test has been performed on a representative sample of the waste is through the Industrial Waste Evaluation Form. The Certification part of the form says that all the information on the form is accurate and that all analyses have been performed on a volumetrically representative sample of the waste. In addition to this certification, the County may want to discuss specific details of the sample collection procedure with the generator if the waste stream is variable.

Leachate TCLP threshold limits are used as a baseline (Appendix F). The County reserves the right to refuse a waste even if the waste is acceptably below TCLP guidelines, depending on current conditions in the landfill, and leachate field conditions. Annual chemical evaluations of the landfill leachate recorded in the RLF=s Annual Report may reveal an elevated chemical level, which may result in the County lowering TCLP or other future guideline acceptance limits. This could exclude some currently accepted industrial wastes from future disposal at the RLF.

4.2.13 County Waste Evaluation Decision Tree

When the various types of documentation are submitted with the Industrial Waste Evaluation Form, a decision making process is used to evaluate whether to accept a waste. This process will take into account many variables about the waste and the capabilities of the facility. The County Industrial Waste Evaluation Decision Flow Chart (Appendix J) is a flow chart used by County landfill managers that summarizes the different variables and decisions involved in evaluating the acceptability of waste.

4.3 Record Keeping

The county tracks and documents all incoming industrial solid waste loads through the use of the waste inventory and evaluation forms, tracking forms and manifests, certification forms, load inspection and rejection forms, letters specifying delivery and handling requirements, rejection letters, and operations logs.

4.3.1 Approval Letters

Waste generators will be notified of the results of the waste evaluation procedure. The approval will be in the form of a letter that includes information regarding each acceptable waste type, the acceptable quantity and frequency of delivery, the packaging and future testing frequency based on a disposal approval letter=s expiration date.

The approval letter will specify the future periodic chemical analyses needed for continued acceptance of the generator=s waste. The frequency

of testing will be based on the type of waste, the generating process, and the chemicals of concern. Some waste materials are consistent in composition while others vary with time and should be tested more periodically. The letter will also inform the generator that they must notify the landfill operator if any conditions in the waste generating process change. Each industrial waste approved for disposal will be issued an approval letter from the county designating the source, type, and character of each industrial waste that will be accepted for disposal. The landfill operator will be provided with copies of all approval letters. These will be kept on file at the site for reference. The conditions set forth in these approval letters will form the basis for acceptance and disposal of all industrial solid waste in the service area. Haulers are required to bring a current copy of the acceptance letter with them to the RLF when disposing of an industrial waste.

4.3.2 Industrial Waste Tracking Forms

An Industrial Waste Tracking Form will be used to document the transfer and disposal of all industrial solid waste. Each hauler will be given a supply of tracking forms. Cooperation from waste haulers is essential to implement an effective management and record keeping system. Haulers will be required to contact industrial solid waste generators in their respective service areas, observe wastes at the time of pickup to insure the wastes they will deliver are approved for disposal, and keep records of the source and type of industrial wastes hauled. An entry will be made on the tracking form for each industrial waste as it is picked up. The entry should include: waste type(as described in the acceptance letter), waste quantity, and physical description of the material including any packing or special handling methods employed.

The Industrial Waste Tracking Form will help provide assurance that the wastes received are those that have been approved. In addition, the tracking forms will provide an operating record of industrial wastes received in compliance with regulations. A copy of the tracking form is shown in Appendix K.

4.3.3 Waste Inspection

The operator is responsible for inspecting all wastes, including industrial wastes at the facility. Inspection of industrial wastes is of critical importance because of the potential for hazardous conditions and contamination from industrial materials. The first level of inspection is at the scale as the load arrives. Each load of industrial waste must be accompanied by a tracking form and its acceptance letter, and the operator should check to determine the waste being delivered is acceptable and approved by an approval letter. If the material in the waste load does not meet with the conditions of the approval letter (ie. visible free liquids, partially filled containers that were evaluated as empty, large containers with no punched holes, or

paint/resin that are not completely cured, etc.), the operator will refuse the load. The landfill operator will immediately fill out a duplicated *Regional Landfill Waste Rejection Form* (Appendix L), giving the reason for the waste rejection, and give one copy to the driver of the rejected load. The Hazardous/Industrial Waste Specialist, Landfill Supervisor or other Solid Waste Supervisor will then be verbally notified of the rejected load, and the reason for its rejection. Waste materials that do not meet the approval standards for packing, testing, or waste category may be rejected or held up until final determination of the acceptability. The landfill operator will complete a visual inspection of each industrial waste load. The landfill operator will also select a random industrial waste load upon which to document that inspection in the *Regional Landfill Weekly Industrial Waste Inspection Form* (Appendix M).

Operators and contractors should also be alerted to inspect loads as they are deposited in the fill areas to determine if any potentially hazardous or harmful wastes have been included or hidden in approved loads. Unauthorized materials discovered in the waste will be separated from the fill before being covered, with the waste load and point of origin determined if possible. Corrective action may be taken in these instances to properly dispose of the material. The County contractors and the operator are responsible for the safety of the workers and users of the RLF. The operator and County will make every effort to meet the needs of the industrial waste generators in the service area, but the concerns for protection of the environment, safety, and effective operating practices will not be compromised. Waste generators can be held financially and physically responsible for the removal and disposal of contaminated waste loads hauled to the RLF.

Acceptable wastes are deposited at the working face and covered by the end of the day.

4.3.4 Operating Record

An operating record is kept at the facility. The written operating record meets the requirements of Minnesota Rules part 7035.2575 subpart 2. The facility operator is responsible for keeping the record up to date on a daily basis. The record can be used to track activities at the facility for future reference in order to establish compliance with the facility permit and to follow up problems. This record is kept for a minimum of five years or until any problem or enforcement action is resolved, whichever is longer. St. Louis County utilizes a detailed computer system to record, store, and summarize much of this data.

Items to be included in the Operating Record include:

- Amount of mixed municipal waste received each day and the location.

- Amount, types, point of generation, and handling method of any industrial or special wastes received each day and the disposal location and elevation of received wastes.

- All summary reports and details of incidents requiring the implementation of the Contingency Action Plan regarding groundwater or surface water pollution.

- All inspection results as conducted by the operator or the regulatory agencies.

- All monitoring, testing, or analytical results generated for the facility.

5 Industrial Waste Management Policies

5.1 Acceptable Waste

The following criteria form a basis for decisions on whether or not to accept a waste. Meeting all the criteria does not guarantee a waste will be accepted.

- Non-Hazardous Waste: Does not exhibit the hazardous characteristics of ignitability, corrosivity, reactivity, toxicity or lethality, or exceed County imposed limits.
- Not a Listed Unacceptable Waste Type: See Section 5.2.

- Liner Compatibility: There are some chemical compounds that, in sufficient concentrations, can be absorbed into a synthetic HDPE liner and cause softening and breakdown, affecting its long-term strength properties. In general, the liner could be oxidized by the strong oxidizing agents under acid conditions. Compounds of concern include: aldehydes; aromatic, aliphatic, and halogenated hydrocarbons; ethers; ketones; acids; and peroxides.

  If these compounds are present, as determined by leach tests, the County will review the waste, taking into account the concentrations, volumes, leaching characteristics, and estimated dilution.

- Air Quality Impacts: Rejection based on this criterion is the result of a determination by the County that the waste may adversely impact the quality of air.

- Handling Methods: Waste characteristics will be reviewed to assure that safe and reasonable handling methods are available. The factors considered are employee health and safety, availability and capability of equipment and the availability of space. The frequency of loads and the packaging of the waste will also be considered.

! Leachate Treatment Field Compatibility: Rejection based on the determination by the County that the leachate from this waste may adversely impact the Leachate Treatment Field.

5.2 Unacceptable Waste

Environmental damage and any resultant liabilities may be lessened by preventing the disposal of unacceptable wastes in the first place. Some wastes are prohibited by state law.

The following wastes are unacceptable for disposal within the St. Louis County Regional Landfill:

! hazardous wastes
! free liquids or wastes containing them
! infectious wastes (see exemption)
! radioactive wastes
! lead acid batteries
! untreated sewage
! used oil/oil filters
! mercury/mercury containing materials
! fluorescent tubes
! yard waste
! rendering and slaughterhouse waste (see exemption)
! ignitable or spontaneously combustible wastes (see exemption)
! waste containing PCB=s such as ballasts
! electronic equipment and screen monitors generated from businesses
! explosives
! wastes with a pH less than 4.0 or greater than 12.0
! tires
! white goods, such as major appliances
! intact compressed gas cylinders (excluding empty aerosols)
! unidentified or unapproved industrial wastes

5.3 Specific Waste Categories

5.3.1 Empty Pesticide Containers

Containers that once held substances regulated under the Federal Insecticide, Fungicide, and Rodenticide Act must be emptied according to label instructions and triple rinsed. To triple rinse is to flush the container three times, each time using a volume of the normal diluent equal to approximately ten percent of the container=s capacity.

The waste hauler must present the triple rinse certification form and the waste tracking form (Appendix N) to the landfill attendant upon arrival at

the landfill. A container is considered empty if all wastes have been removed using practices commonly employed to remove such materials, or an end has been removed for containers in excess of 25 gallons.

If the appropriate waste management forms are completed for the empty pesticide containers and the load of containers pass the visual inspection, the containers will be accepted at the landfill. The empty containers will be placed at the active working face and compacted with the day=s volume of municipal solid waste.

5.3.2 Asbestos

Airborne asbestos fibers are hazardous to human health. Asbestos fibers do not decompose and cannot be burned, making composting or incineration of asbestos poor management methods. Since asbestos fibers do not migrate through the groundwater very easily, burial at a land disposal facility is the accepted disposal method. Asbestos will be accepted at the Regional Landfill provided proper packaging, handling, and notification procedures are followed and care is taken in unloading and covering the asbestos so that the bags are not broken open, allowing the asbestos to become airborne.

The major source of friable asbestos wastes is from demolition projects. Friable asbestos, typically used as pipe insulation, must be wetted and placed into plastic bags at least 6 mils thick. The bags must also contain a warning that identifies the contents of the bag as asbestos and that breathing asbestos is a health hazard. Non-friable asbestos-containing materials will also be accepted at the Regional Landfill; these include ceiling tiles, floor tiles, and wall board and house siding shakes. This material will be accepted in bulk form if it is wetted and covered or packaged.

Asbestos will be accepted only on the days and times established by the County. The asbestos will be placed as designated by the landfill operator on the working face and covered with at least 24 inches of cover or mixed municipal waste prior to driving equipment over it. Landfill personnel will note on the manifest form (Appendix O) when and where the asbestos was placed and will record the location and disposal method of the asbestos on a site development plan, if greater than ten cubic yards is delivered. The horizontal coordinates will be recorded to facilitate location identification. Also identified will be the lift, or vertical placement, of the waste.

Upon arrival, the business hauler (excluding residential self-haulers) must provide a manifest form for the asbestos load. The attendant will ensure that the manifest form is accurate and then notify the operator of the quantity and nature of the incoming load. The operator will check each load prior to dumpingCor at least immediately after dumpingCto ensure that all

friable asbestos is bagged and labeled. If any is found to be improperly bagged or labeled, the load will be rejected. For more information on Asbestos call the Asbestos Information Hotline at the MPCA at 1-651-297-8685 or call toll-free at 1-800-657-3864.

5.3.3 Waste Containing PCB=s

PCB=s are a class of organic compounds generally known as poly-chlorinated biphenyls and includes any of several compounds produced by replacing two or more hydrogen atoms on the biphenyl molecule with chlorine atoms. Products containing PCB=s are added during or after manufacture as: plasticizers, heat transfer media, hydraulic fluids, dielectric fluids, solvents, surfactants, insulators or coating, adhesive, printing or encapsulating materials, or for other uses related to the function of such item, device or material.

PCB=s or wastes contaminated with PCB=s will not be accepted at a concentration of greater than 5 mg/l any St. Louis County Solid Waste facility. Contact a hazardous waste transporter for greater concentrated waste. A current list can be obtained from the Minnesota Department of Transportation Office of Motor Carrier Services, Safety and Compliance Division in St. Paul. The telephone number is (888) 472-3389.

5.3.4 Spilled Nonhazardous Materials

Wastes generated from spilled material first need to be determined if they are indeed nonhazardous. This can be done by referring to the spilled material=s MSDS if it is available. If the concentration of the waste is unknown, or the waste is essentially unknown, it will need to have a full RCRA TCLP analysis, as well as other potential tests such as pH, paint filter test, and flash point test. Refer to the MDH listed analytical laboratories for evaluation.

If the waste can be classified as nonhazardous and meets County criteria for waste disposal, it can be disposed of at the Regional Landfill.

5.3.5 Spontaneously Combustible or Ignitable Wastes

Wastes that could spontaneously combust or that could ignite other wastes because of their high temperature or chemical instability will not be accepted at any St. Louis County Solid Waste facility. A possible exception to this policy that may be accepted is coal dust and coal waste mixed with soil or other non-hazardous material, provided the waste can be rapidly buried.

Contact a hazardous waste transporter with a current list obtained from the Minnesota Department of Transportation Office of Motor Carrier Services, Safety and Compliance Division in St. Paul. The telephone number is (888) 472-3389.

5.3.6 Foundry Wastes

Foundry wastes are almost exclusively generated by the primary metals industry through the sand molding, core making, and metal purifying processes. The composition of this waste is mostly used core and molding sand containing phenolic binders. Metals dross, cupola slag, and butts are also included in this waste class. These wastes have high concentrations of heavy metals so it is important that St. Louis County receive sufficient chemical characterization information.

There are no special handling procedures that are required for disposing of foundry wastes. The waste generator must transport the foundry waste in a covered truck to eliminate the potential for dusting problems.

The waste generator must submit all the applicable physical and chemical waste characterization information for foundry waste. In addition, the waste generator must submit the appropriate waste tracking information for the foundry waste.

Foundry waste can be a high-volume waste, and some may contain high concentrations of heavy metals. For this reason, all foundry waste will be TCLP analyzed for the following constituents:

Arsenic	Lead
Barium	Mercury
Cadmium	Silver
Chromium	Selenium

Only waste with TCLP data below the acceptable levels listed in Appendix E will be accepted. Other testing may be required for more constituents, depending on the foundry waste, such as copper, aluminum or molybdenum. The testing is required at least once per year on all foundry wastes. More frequent testing may be required if the quality of the waste varies during the year or if the contaminant levels in the waste are near the County TCLP limits listed in Appendix F.

An approval letter issued by the County must be received by the generator prior to disposal of foundry wastes at the Regional Landfill. Landfill personnel will be informed of the approval and will have the letter of approval on file. The attendant will review the tracking form and letter of approval to ensure that they are in agreement.

5.3.7 Incinerator Ash

Fly Ash and bottom ash are generated by electric utilities that burn coal and by resource recovery facilities that burn municipal solid waste. The

utility ash will vary somewhat in chemical characteristics and physical conditions depending on the type of coal that is burned. The municipal solid waste ash can vary considerably in chemical characteristics depending on the waste output. Heavy metals can be a source of problems in the fly ash especially for municipal solid waste ash. Currently, the St. Louis County Regional Landfill is only accepting coal ash generated by two local municipal utilities.

The waste generator of the ash is required to supply all physical and chemical properties to the county as required by the industrial solid waste management plan. All applicable forms must be completed including the Industrial Waste Tracking Form to be accompanied with each load of ash that is disposed.

If a dust problem occurs with the disposal of the ash, it must be transported to the landfill in covered trucks and wetted down, as necessary, to eliminate such dust problems during dumping activities and while the ash is begin spread and compacted.

5.3.8 Paint Residues and Dust, Sandblasting Wastes and Sand Filters

Paint wastes (residues and dust) are produced in the manufacture, application, and removal of paints and include cleanup solvents, empty paint containers, sludges from over spray, sandblasting wastes, sand filters, and general cleanup operations. Paint residues are comprised of pigments which include metals, solvents, and filters with traces of anti-foaming agents, dispersants, and fungicides.

Incineration is the preferred management method because of the solvents remaining in the residue. In addition to the solvents, heavy metals such as Cd, Cr, and Pb are also a concern.
The County requires detailed physical and chemical characterization of the paint waste being brought to the facility. Any unknown paint waste considered for disposal must be analyzed by a TCLP test to ensure that none of its components possess hazardous characteristics.

Paint that is disposed of at the Regional Landfill must be thoroughly dry before being accepted for final disposal. If the waste is accepted, an approval letter will be issued to the generator. If the waste is to be shipped in drums or barrels, the generator must punch holes in the top, bottom, and sides of the drums/barrels to ensure that no free liquids are present. The operator will work the paint waste into the active disposal area as soon as being received. The landfill operator will document the quantity of paint waste received each day and the approximate location of the active area.

5.3.9 Sludges

Sludge is generated in a variety of industrial processes. Sludges present two main management problems that include large volumes and high moisture content. Many sludges are composed primarily of water, but may also include solvents. Liquids are banned from land disposal facilities because of the operational problems associated with excess moisture in the working area and the increased amount of leachate generated. Plus, as in the paper industry, the sludge contains pulp and fibrous materials with small amounts of heavy metals, ammonia, phosphorous, various fillers, and clays.

If the sludge meets County criteria, the waste will be accepted and an approval letter provided to the waste generator prior to disposal. Copies of the approval letter will be sent to the RLF attendant and operator.

5.3.10 Ink Sludges, Solvents, and Clean-up Materials

Some inks may contain high concentrations of heavy metals, and some have solvents within. Ink sludge must be in a solid or semi-solid form. Solvents are liquid and may have hazardous properties, therefore, unacceptable at the landfill in that form. Clean-up materials (absorbent and spilled waste) shall go through the same acceptance process as all other industrial wastes.

If the waste is accepted, an approval letter will be issued to the generator. If the waste is to be shipped in drums or barrels, the generator must punch holes in the top, bottom, and sides of the drums/barrels to ensure that no free liquids are present.

5.3.11 Rendering, Slaughterhouse and Deer Wastes

Rendering and slaughterhouse wastes will not be accepted at any St. Louis County Solid Waste facility. The hauler should locate a rendering plant that will accept the waste. Check the yellow pages under ARendering Companies@ for possible disposal outlets.

The County will make an exception for the seasonal generation of processed deer and elk waste. Carcasses and ash waste from deer and elk that have not been confirmed to be infected with chronic wasting disease will be accepted at the RLF. The Department will continue to evaluate the possibility of accepting carcasses or carcass ash waste from animals confirmed to have been infected with chronic wasting disease.

All commercial entities delivering deer and elk carcasses to the RLF will be directed to a designated area on the working face. This designated area will be located on the upper levels of the landfill and carcasses will be immediately covered with one foot of intermediate cover material.

5.3.12 Fiberglass, Urethane, Polyurethane, and Epoxy Resin Waste

The major concern with these products is the organic compounds remaining in the waste. If the wastes have adequate curing time, they harden through evaporation of the organic compounds and are of less concern.

If these wastes are going to be accepted, they must be inspected to assure that they are hard before depositing them in the RLF. A detectable vapor can be cause for rejection of this type of waste. The landfill operator will request the approval letter and Industrial Waste Tracking Form from the waste hauler each time this waste is delivered. Any discrepancies from the approval letter may result in rejection of the load.

Waste delivered in drums must have holes punched by the generator in the top, bottom, and sides of the drums/barrels to verify that no liquids are present. Drums or barrels delivered without holes will be rejected.

5.3.13 Spent Activated Carbon Filters

Carbon filters can be used to treat drinking water or contaminated ground water and they can be used to filter gases and vapor from various media. They remove certain metal and organic compounds by absorbing them onto the carbon particles. Often, the carbon can be processed and reused.

The county recommends recycling of this type of waste. Testing will depend on the compounds that are being removed in the filtration process. MSDS=s of the filtered material should be provided.

Some types of carbon filters may be landfilled, provided they meet the criteria in the Appendix section. If testing shows these wastes meet with the proper criteria, the county will issue a letter of approval and Industrial Waste Tracking Form to the waste generator, with copies of the approval letter going to the RLF staff.

5.3.14 Machining Wastes

Waste material from machining processes is a prime candidate for recycling if the waste is not co-mingled with other metals or contaminated by other materials.

If the waste cannot be recycled, the County will determine if it can be disposed at the RLF. Testing for the Flash Point and TCLP test of the base material and any co-mingled materials may be required. MSDS information of the absorbed material shall also be provided.

If the waste is accepted, an approval letter will be issued to the generator. If the waste is to be shipped in drums or barrels, the generator must punch holes in the top, bottom, and sides of the drums/barrels to ensure that no free liquids are present.

5.3.15 Oil-Soaked Rags and Towels

The following guidelines are for the disposal of oil-soaked rags and towels. These apply only to rags used for oil, not to rags contaminated with solvents, paints, stains, or ink.

Launderable Rags

1. Wring out the rags by hand or by use of a wringer or extractor.
2. Collect the liquid and combine with other used oil for collection and recycling.
3. Send the rags to a laundry discharging to a wastewater treatment plant or
4. Have the rags collected and incinerated at a proper facility.

Disposable Towels

Manage as industrial solid waste.

5.3.16 Uncontrolled Burned Structures & Buildings

Unburned or lightly charred portions of an uncontrolled burned building may be put in a demolition landfill. If a charred board is unable to stand under it=s own weight, or crumbles into pieces when dropped from a standing position, it must be put into a lined MSW landfill. Ashes from an uncontrolled burned building must go into the RLF, or other lined landfill.

Care must be taken to separate out hazardous waste from the ashes. Paint containers, adhesives or cleaners and such cannot be scooped up with the ashes and put into the RLF. Burned paint cans or adhesives from residential homes can be put into the landfill if the contents are completely dry and the cover is off the container. It is up to the generator to separate hazardous waste from the burned building debris before hauling.

5.3.17 Medical Wastes, Medical and Veterinary Sharps

Medical wastes generated from businesses cannot be disposed of at the Regional Landfill. Exceptions to this rule include homeowner-generated medical sharps that are put into a sturdy, sealed container and labeled with a County AMedical Sharps@ sticker, and sharps generated from a veterinary clinic. These veterinary sharps are acceptable for disposal if the sharps are decontaminated with bleach, placed into a sturdy, sealed container labeled as AVeterinary Sharps@, and diseases from these sharps are known not to cross-contaminate into humans. The packaged veterinary sharps shall be delivered in person to the Regional Landfill, not thrown into the normal trash. If veterinary sharps come into contact with

Aresearch animals@ or Aresearch animal waste@, these sharps are not allowed to be disposed of at the RLF.

5.3.18 Railroad Ties, Green-Treated Wood

The RLF will accept limited amounts of railroad ties from businesses. Quantities of up to 48 cubic feet, will be accepted at the Regional Landfill per load, but only if the regional tie-burning facilities currently are not accepting railroad ties for fuel. Larger quantities will be referred to facilities that use these ties for fuel. Contact:

Railworks Wood Waste Energy
5020 Lesure Street
Duluth, Minnesota
(218) 624 - 9356

These ties are put into a 58 cubic yard trailer, and later delivered to Railworks Wood Waste Energy.

Green-treated wood is accepted in limited quantities at the RLF from businesses. A maximum of 24 cubic feet of green-treated wood will be accepted per load from businesses. **Acceptance of loads containing greater than 24 cubic feet of green-treated wood will be evaluated on a case by case basis.** Alternative uses or treatment of this wood would be preferred by the County.

5.3.19 Other Wastes

Wastes not conforming to any previous or following category must first be evaluated by a MDH approved analytical laboratory, and then evaluated on a case by case basis, depending on MSDS=s or other information provided by the waste generator.

5.4 Demolition Waste

The County operates three demolition landfills that do not have an engineered liner and, therefore, are not capable of preventing contaminants from entering the groundwater. Only chemically inert materials such as concrete, glass, etc., can be accepted without adverse groundwater impact. Minnesota Solid Waste Rules part 7035.0300 define demolition debris as:

> *Solid waste resulting from the demolition of buildings, roads, and other man-made structures including concrete, brick, bituminous concrete [i.e., asphalt], untreated wood, masonry, glass, trees, rock, and plastic building parts. Demolition debris does not include asbestos wastes.*

Construction debris differs from demolition debris and cannot be handled in the same manner. *All* adhesives, paints, cleaners, solvents, and other materials containing organic compounds and their containers must be separated from the

other inert wastes because these compounds can readily leach from the waste into the groundwater. These materials must be disposed of as hazardous wastes.

5.5 Household Hazardous Wastes

The County has constructed a household hazardous waste(HHW) collection and storage facility adjacent to the landfill which opened in 1999. This HHW facility is open year round on Tuesdays and Saturdays from 8:00AM to 1:00PM, excluding major holidays. A second facility opened in August of 2002 at the Hibbing Transfer Station and is open on Saturdays from 8:00 AM to 1:00 PM. These facilities accept HHW from household sources, which is then packed and stored temporarily, until transported to the WLSSD facility in Duluth, where it is again transported to approved treatment or disposal facilities. The Virginia HHW Facility incorporates a Materials Exchange Program. The County also schedules multiple household hazardous waste collections at various communities during the spring through fall collection season. Under contract by the County, the Western Lake Superior Sanitary District operates multiple remote hazardous waste collections for Very Small Quantity Generators (VSQG) of business hazardous waste, which accept waste pesticides, thinners, solvents, flammable wastes, acids and bases, unusable paint, chemicals, adhesives, batteries, and fluorescent tubes.

The Solid Waste Department **has** also started collecting hazardous waste from Minimal Quantity Generator businesses (less than 100 pounds of hazardous waste generated per year) beginning in 2003 at the HHW facility at the RLF.

5.6 Special Wastes

Residents are also allowed to dispose of recyclable materials, appliances, scrap metal, lead acid batteries, used automobile oil filters, waste oil, anti-freeze, PCB ballasts, and four foot fluorescent tubes in approved storage containers at the RLF, the five transfer stations, as well as some canister sites. These special wastes are appropriately stored until collected by approved contractors, or by County personnel properly trained for transportation of these materials. Disposal is available to the public during scheduled hours of operation.

5.7 Executive Summary

Any business wishing to dispose of Industrial Waste in St. Louis County should first read Section 4 of the ISWMP. This section best represents the process on how an Industrial Waste becomes accepted for disposal at the Regional Landfill. It is incumbent on the business to properly evaluate its waste, and to accurately present that evaluation and information to the County, so **the County** may determine if the waste can be accepted for disposal at the RLF.

Appendix A - O

Appendix A	Generator Waste Plan (GWP)
Appendix B	Industrial Waste Evaluation Form
Appendix C	Waste Generator Evaluation Process Flowchart
Appendix D	Industrial Waste Approval Letter
Appendix E	Industrial Waste Rejection Letter
Appendix F	St. Louis County Leachate Threshold Limits
Appendix G	Characteristics of Ignitability
Appendix H	Characteristics of Corrosivity
Appendix I	Characteristics of Reactivity
Appendix J	St. Louis County Industrial Waste Decision Flow Chart
Appendix K	Industrial Solid Waste Tracking Form
Appendix L	Regional Landfill Waste Rejection Form
Appendix M	Regional Landfill Weekly Industrial Waste Inspection Sheet
Appendix N	Empty Pesticide Container Triple Rinse Certificate
Appendix O	MPCA Asbestos Manifest and Instructions

Appendix A

GENERATOR WASTE PLAN

Company Name:_____Parcel Code_____
Address:_____City, State, Zip_____
Contact Person:_____ Phone:_____Fax:_____
Nature of Business:_____

Use this form as a guide for the types of materials in your waste plan. Not all wastes will apply to your company and you may identify other wastes not on this list. ACurrent Disposal Method@ must include specific site name and/or company name (i.e., Cook Transfer Station, Regional Landfill, Oil Services, Inc., AXYZ@ Recycling, etc.). Attach additional pages as needed. Return completed forms to St. Louis County Environmental Services Department, 307 First Street South, Suite 115, Virginia, MN 55792.

G Please send me information about reducing waste in my business.

Waste Type/Material Included	Annual Volume (cubic yards, pounds, gallons, etc.)	Current Disposal Method
Mixed Solid Waste (list additional types)		
Aerosol cans (empty)		
Cardboard		
Furniture		
Glass		
Food Wastes		
Packing Material		
Paint containers (empty and dry)		
Paper - all types		
Plastic - all types		
Non-oily rags, gloves, any other textiles		
Demolition (list types)		
Scrap Metal (list additional types)		
Appliances		
Barrels		
Batteries		
Alkaline/General Purpose		
Lead Acid		

ickel Cadmium /Rechargeable
ıtton Batteries

Waste Type/Material Included	Annual Volume	Current Disposal Method
Oil (list additional types)		
Hydraulic fluid		
Lubricating oil		
Grease		
Oil-Contaminated Items (non-PCB)		
Compressed Filters		
Bags, Absorbent Pads, Absorbent Booms		
Hoses		
Septic Treatment Material (list additional types)		
Grit and Bar Screenings		
Sludge		
Hazardous Wastes - (list additional types)		
Asbestos		
Chemical Wastes		
Fluorescent Lamps		
PCB Contaminated		
Paint		
Solvents		
Other (to be evaluated) - (list additional types)		
Ash		
Casting Sands		
Dust		
Floor Sweepings		
Resin		

Sludges		
Welding Rods		

Mail to: St. Louis County Environmental Services Department, 307 First St. S., Ste. 115, Virginia, MN 55792 Or FAX to: 218-749-0650

Appendix B

ST. LOUIS COUNTY ENVIRONMENTAL SERVICES DEPARTMENT
INDUSTRIAL WASTE EVALUATION FORM

Generator of Waste Information

Company Name:_____

Address:_____

Address where waste is generated if different from above:_____
Contact Person:_____ Title: _____

Phone:_____ Fax:_____ E-Mail:_____

Nature of Business:_____

Waste Hauler:_____Phone:_____
Address:_____ Contact Person:_____

Physical Characteristics of Waste

Description of Waste (Name of waste, color, texture, smell, etc.):_____

_____

Process Generating Waste:_____

_____

Reason for Disposal:
( ) By-Product ( ) Off-Spec ( ) Damaged ( ) Spill ( ) Contaminated
( ) Other -
Describe_____

Anticipated Volume
_____Cubic Yards _____Pounds _____Gallons Other_____

Per
( ) Day ( ) Week ( ) Month ( ) One Time Only
( ) Other -
Describe_____

Physical State
( ) Solid ( ) Semi-solid ( ) Liquid ( ) Powder
Color:_____

Packaging
( ) Bulk ( ) Bags ( ) Boxes ( ) Drums - *type/size* _____

Required Special Handling: _____

_____

Chemical Properties of Waste

1. Is this waste a Ahazardous waste@ or a Alisted waste@as defined by State and Federal regulations in the Minnesota Hazardous Waste Rules or 40 Code of Federal Records (CFR) part 261 of the Resource Conservation and Recovery Act (RCRA)?
   ( ) Yes ( ) No

2. Are there other components in your waste not specifically identified in the Minnesota Hazardous Waste Rules or 40 CFR part 261 of the Resource Conservation and Recovery Act that would pose a risk to human health and the environment?
   ( ) Yes ( ) No

3. Does this waste exhibit any of the characteristics of being Ignitable, Reactive, Corrosive, Toxic and/or Spontaneous Combustible, as per the Minnesota Hazardous Waste Rules or 40 CFR part 261 of the Resource Conservation and Recovery Act?
   ( ) Yes ( ) No

4. Please list concentrations of these applicable constituents or other proper characterizations of this waste.

Item	Total(mg/L)	TCLP(mg/L)	Item	Total(mg/L)	TCLP(mg/L)
pH	(0-14)	_____	PCB=s	_____	
Cyanides	_____	_____	Sulfides	_____	_____
Density	pounds/cubic yard	_____	Other	_____	_____

5. Chemical Analysis: Attach all pertinent Material Safety Data Sheets (MSDS) and Laboratory Reports that document the waste and indicate what information is enclosed:
   ( ) Material Safety Data Sheets (MSDS)
   ( ) Chemical Composition
   ( ) Toxicity Characteristic Leaching Procedure (TCLP) Test for RCRA Listed or other constituents
   ( ) SPLP Test
   ( ) Free Liquid Test
   ( ) Other _____

Certification

I hereby certify that all information submitted in this and all attached documents is complete, representative and accurate to the best of my knowledge, that all known or suspected hazards have been accurately disclosed, and that all analysis have been performed on volumetrically representative samples of the waste. I understand that I or another, as an authorized representative of this company, must report any changes in the wastes generated by this company to the St. Louis County Environmental Services Department prior to disposal approval within 30 days of awareness of the new waste generated. I shall provide as soon as possible and prior to disposal documentation on the waste=s composition, amounts generated, and disposal status. I also understand that falsification of information on this waste can result in legal actions and recovery claims against both the waste generator and the signed representative.

Name: _____ Title: _____

Signature: _____ Date: _____

Complete and return the original signed forms and all documentation to:

St. Louis County Environmental Services Department
Northland Office Building Suite 115
307 First Street South
Virginia, MN 55792
1-800-450-9278 or 218-749-9703

Appendix C- Industrial Waste Evaluation Decision Flow Chart

St. LOUIS COUNTY EVALUATION FLOW CHART

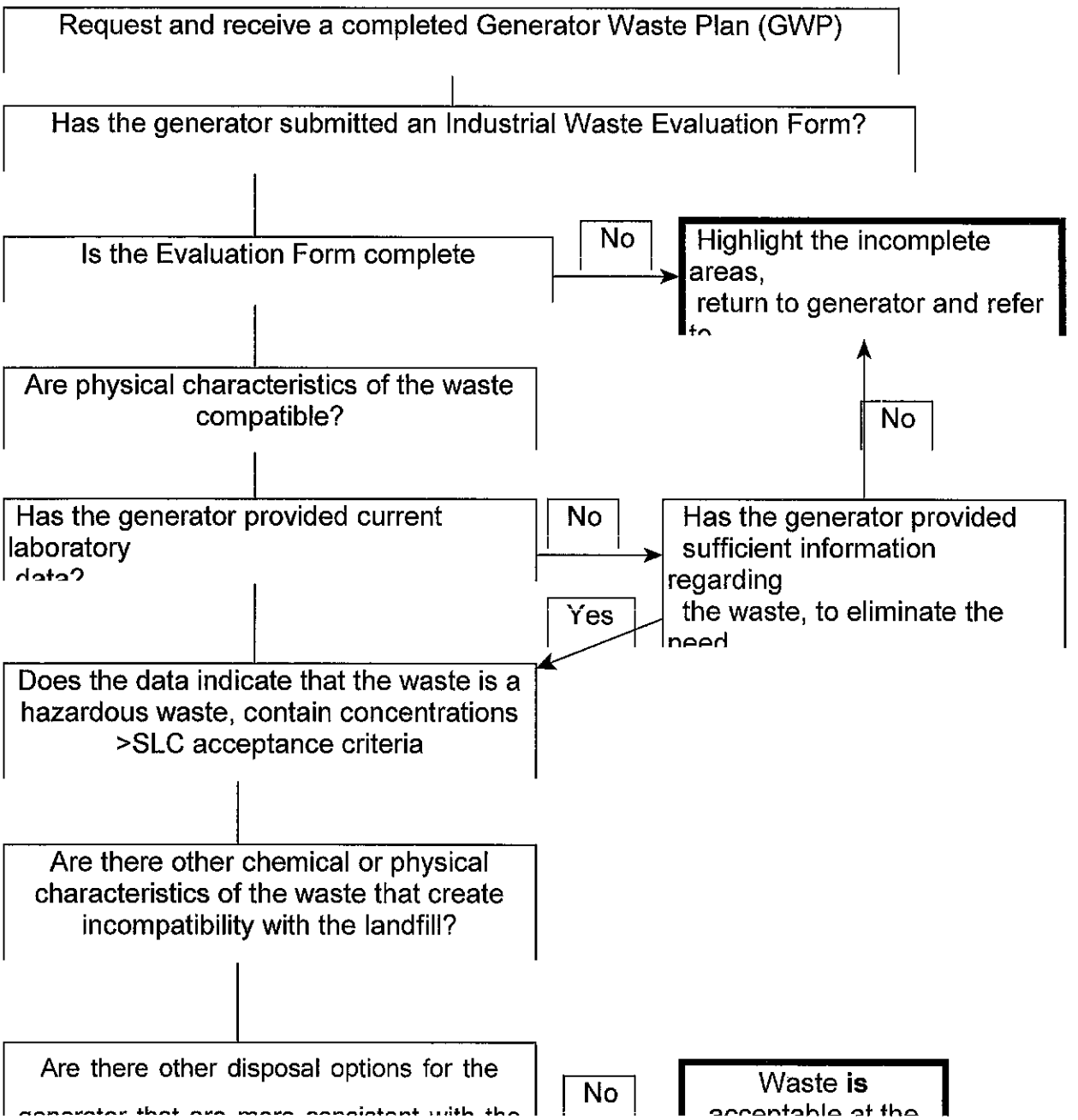

Saint Louis County

Environmental Services Department $ 307 First Street South, Suite 115 $ Virginia, MN 55792
Phone: (218) 749-9703 or 1-800-450-9278$ Fax: (218) 749-0650
Email: troolint@co.st-louis.mn.us

Ted Troolin
Director

Joan Adams
ABC Company
123 Main Street
Hibbing, MN 55746

RE: Widgit Waste

I have received your Industrial Waste Evaluation Form dated Feb 29th, 2011 and the TCLP results for RCRA Metals and Volatile Organic Compounds dated March 14th, 2011. Based on the results of these TCLP tests and the Evaluation Form, I find this waste acceptable material to dispose of at the Regional Landfill in Virginia, Minnesota. You may transport the approximately 4,000 tons of annually created Widget Waste (blue octagon shapes) to the Regional Landfill at your convenience. The disposal cost for this waste will be $39.00 (code 026) per ton plus tax. This waste disposal can be paid for with by check, a credit card or an Environmental Services Department Pre-Paid Card. Have your haulers bring a copy of this acceptance letter and a completed Industrial Waste Tracking Form with them to the Regional Landfill when disposing of this waste. Disposal at the landfill is under the direction of the landfill operator. This waste disposal acceptance letter will *expire on March 14th, 2012.*

Widgit Waste will need to be annually re-evaluated. If your manufacturing process changes, it is necessary to fill out a new Industrial Waste Evaluation Form within 30 days, upon which new chemical evaluations shall be required to determine if this new waste is acceptable for disposal at the Regional Landfill.

If you should have any questions, please call me at 218-741-8831 or on my cell phone at (218) 750-0283.

Sincerely,

Chip Lewis
Hazardous/Industrial Waste Specialist

CC: Regional Landfill

Appendix F

Leachate Threshold Limits
TCLP Limits (mg/L)

Contaminant	St. Louis County Limits	MPCA Limits
Metals		
Arsenic	2.5	5.0
Barium	50.0	100.0
Cadmium	0.5	1.0
Chromium (metal & Cr (VI)	2.5	5.0
Lead	2.5	5.0
Mercury	0.1	0.2
Selenium	0.5	1.0
Silver	2.5	5.0
Herbicides & Pesticides		
2,4,5 - TP (Silvex)	0.5	1.0
2,4 - D	5.0	10.0
Chlordane	0.015	0.03
Endrin	0.01	0.02
Heptachlor (& Hydroxide)	0.004	0.008
Lindane	0.2	0.4
Methoxychlor	5.0	10.0
Toxaphene	0.25	0.5
Volatile Organic Compounds		
1, 1-Dichloroethylene	0.35	0.70
1, 2-Dichloroethylene	0.25	0.5
1, 4-Dichloroethylene	3.75	7.5
Benzene	0.25	0.5
Carbon Tetrachloride	0.25	0.5
Chlorobenzene	50.0	100.0
Chloroform	3.0	6.0
Methyl Ethyl Ketone	100.0	200.0
Tetrachloroethylene	0.35	0.7
Trichloroethylene	0.25	0.5
Vinyl Chloride	0.10	0.2

Appendix F

Leachate Threshold Limits - con=t
TCLP Limits (mg/L)

Contaminant	St. Louis County Limits	MPCA Limits
Semi-Volatiles		
2, 4, 5-Trichlorophenol	200.0	400.0
2, 4, 6-Trichlorophenol	1.0	2.0
2, 4-Dinitrotoluene	0.065	0.13
Cresol	100.0	200.0
m-Cresol	100.0	200.0
0-Cresol	100.0	200.0
p-Cresol	100.0	200.0
Hexachloro-1, 3-butadiene	0.25	0.5
Hexachlorobenzene	0.065	0.13
Hexachloroethane	1.5	3.0
Nitrobenzene	1.0	2.0
Pentchlorophenol	50.0	100.0
Pyridine	2.5	5.0
Others		
Reactive Cyanide*	5.0 mg/l	None
Reactive Sulfide*	50.0 mg/l	None
PCBs	10.0 ppm	50.0 ppm
DRO/GRO	1,000.0 mg/L	None
pH (units)***	4.0 to 12.0 (solid waste)	2.0 to 12.5 (aqueous)
Paint Filter Test	pass/fail	pass/fail
Flash Point Test	>140° F	>140° F

* Limits are not specified. MPCA rules read, Alt is a cyanide or sulfide bearing waste which, when exposed to pH conditions between 2.0 and 12.5 can generate toxic gases, vapors, or fumes in a quantity sufficient to present danger to human health or the environment.@

** Limit is not specified in MPCA rules.

*** MPCA Hazardous Waste rules specify only aqueous solutions as having a pH, whereas, St. Louis County Industrial Solid Waste Plan also specifies solid wastes as having a pH.

Appendix G

Characteristics of Ignitability

A solid waste exhibits the characteristics of ignitability if a representative sample of the waste has any of the following properties:

1. It is a liquid, other than an aqueous solution containing less than 24 percent alcohol by volume and has a flash point less than 60EC (140EF) as determined by a Pensky-Martens closed cup tester, using the test method specified in ASTM standard D-93-79 or D-93-80; or a Setaflash closed cup tester, using the test method specified in ASTM standard D-3278-78; or as determined by an equivalent test method approved by the EPA.

2. It is not a liquid and is capable, at a temperature of 25EC and a pressure of one atmosphere, of causing fire through friction, absorption of moisture, or spontaneous chemical changes and, when ignited, burns so vigorously and persistently that it creates a hazard.

3. It is an ignitable compressed gas as defined in 49 CFR 173.300, November 1, 1985, and as determined by the test methods described in that regulation, ASTM standard D-323, or equivalent test methods approved by the EPA.

4. It is an oxidizer, such as a chlorate, permanganate, inorganic peroxide, nitro carbo nitrate, or a nitrate, that yields oxygen readily to stimulate the combustion of organic matter.

Appendix H

Characteristics of Corrosivity

A solid waste exhibits corrosivity if a representative sample of the waste has either of the following properties:

1. It is aqueous and has a pH less than or equal to 2.5 or greater than or equal to 12.0, as determined by a pH meter using either an EPA test method or an equivalent test method approved by the EPA. The EPA test method for pH is specified as method 9040 in SOLID WASTE-846, ATest Methods for Evaluating Solid Waste,@ second edition, 1982, as amended by update I in April 1984 and update II in April 1985.

2. It is a liquid and corrodes plain carbon steel with a carbon content of 1.2 percent at a rate greater than 6.35 mm (0.250-inch) per year at a test temperature of 55EC (130EF), as determined by the test method specified in NACE (National Association of Corrosion Engineers) standard TM-01-69 as standardized in SOLID WASTE-846, described in number 1 above.

This type of waste is considered hazardous and is not allowed to be disposed of at any county facility.

Appendix I

Characteristics of Reactivity

A solid waste exhibits the characteristic of reactivity if a representative sample of the waste has any of the following properties:

1. It is normally unstable and readily undergoes violent change without detonating.

2. It reacts violently with water.

3. It forms potentially explosive mixtures with water.

4. When mixed with water, it generates toxic gases, vapors, or fumes in a quantity sufficient to present a danger to human health or the environment.

5. It is a cyanide or sulfide bearing waste which, when exposed to pH conditions between 2 and 12.5, can generate toxic gases, vapors, or fumes in a quantity sufficient to present a danger to human health or the environment.

6. It is capable of detonation or explosive reaction if it is subjected to a strong initiating source or if heated under confinement.

7. It is readily capable of detonation or explosive decomposition or reaction at a temperature of 25EC and a pressure of one atmosphere.

8. It is a forbidden explosive as defined in 49 CFR 173.51, November 1, 1985, or a Class A explosive as defined in 49 CFR 173.53, November 1, 1985, or a Class B explosive as defined in 49 CFR 197.88, November 1, 1985.

A solid waste that exhibits the characteristic of reactivity, but is not listed as a hazardous waste in s. NR 181.16, has the hazardous waste number of D003. This type of waste is considered hazardous and is not acceptable for disposal at any county facility.

TAB E

ST. LOUIS COUNTY
HOUSEHOLD HAZARDOUS WASTE MANAGEMENT FACILITY
REGIONAL LANDFILL
OPERATIONS MANUAL
08/02/2010

Section 1. INTRODUCTION

These guidelines describe the policies and procedures for operating the St. Louis County Household Hazardous Waste Management Facility governing the activities of collection, management, and storage of household hazardous waste as part of the Minnesota Pollution Control Agency's (MPCA) Regional Household Hazardous Waste Management Program (Regional Program). This document with attachments details the site's Operational Procedures to be used at the Regional Landfill HHW Building. A copy of this Operational Procedures must be kept on site at all times.

Section 2.0 COLLECTION PROCEDURES

2.1. **Personnel**. Household hazardous waste shall only be received and handled by trained and medically-approved personnel, as outlined in Section 2.0 of the Operations Manual, Regional Household Hazardous Waste Management Program, Minnesota Pollution Control Agency. Only under unusual circumstances shall waste be accepted by unauthorized personnel. Even then, those personnel shall not directly handle the waste. In addition, trained personnel shall wear protective equipment as outlined in the Regional and Local Facility Safety Plan (Section 6.0) whenever they enter the collection area to accept or package waste.

2.2. **Description and Diagram of Collection and Storage Area**. Attachment 1 (to be prepared - site specific) is a description and diagram of the collection and storage area including parking and traffic flow, a floor plan of relevant structures showing facility fixtures including fire extinguishers; personnel protective equipment; other safety and emergency equipment; receiving, sorting, packaging and storage areas; water supply and sanitary facilities; communication system; and other information that applies to the collection and storage area layout and equipment.

2.3. **Procedures for Receiving Participants.** A discussion of the procedures for receiving participants at the collection site is included in Attachment 2. This discussion addresses how participants will approach the collection area; will be directed to the site; will be instructed (verbally or by sign) upon arrival at the collection area; will be instructed of drop-off and safety procedures; and will exit the site, along with other information for receiving the public. This discussion also addresses how facility personnel will be aware of a participant's desire to drop-off waste if appropriate personnel are not present at the collection site at all times. The Regional Landfill HHW site personnel shall be aware of out-of-county waste when possible, and reject this waste immediately so that it may be handled by its= own county program, unless there is a policy of reciprocating waste acceptance between the two or more counties.

2.4. **Receiving the Waste.** Only individuals who are authorized to receive waste (as

described above) will receive waste from the public. Only under unusual circumstances should unauthorized personnel accept household hazardous waste. Even then, those personnel shall not directly handle the waste. When the participant arrives in the collection area and is greeted by the facility staff person, the authorized staff person shall follow these procedures for receiving the waste:

2.4.1. **Instruction to Participants**. Participants should be verbally instructed, to turn off their vehicles. This will decrease exposure to fumes, minimize exposure to a potential heat source, ensure safe vehicle traffic patterns, and allow the participants to get out of their vehicles to help identify wastes.

2.4.2. **Survey.** All participants intending to deliver waste to the collection area shall complete a survey that contains at least the information requested in Figure 1, the Survey Form.

2.4.3. **Screen Participant Waste.** Before removing any waste from the participant's vehicle, question the participant and visually evaluate the waste quantity, type and condition to ensure the following:

- No containers are leaking;
- The waste was not generated by a commercial, institutional or agricultural activity; and
- The participant does not have ammunition, explosives, ether or picric acid.

(See Section 2.4.4. for procedures for dealing with the above potential problem wastes.)

2.4.4. **Procedures for Handling Potential Problem Wastes.**

2.4.4.1. Procedures for Handling Leaking Containers. Leaking containers should be immediately isolated by placing into a larger container (overpack) or a heavy plastic bag. Certain materials, especially solvents, might be capable of dissolving plastic in which case a metal overpack must be used. Containers with very slow leaks (or evidence of a leak, such as residue on the outside of the container) should be handled in the same way. If a liquid is being discharged at a rapid rate, add absorbent material to the outer container into which it was placed. Any open containers of solid or liquid waste should also be placed in a plastic bag and sealed. If fumes or particulate release is noted don an appropriate respirator.

2.4.4.2. Procedures for Handling Business Waste. Any business that generates hazardous waste, regardless of the size of the business or the amount of waste generated, is required by law to properly evaluate and manage its waste. Disposing of wastes generated by a business through a household hazardous waste collection program is therefore a violation of state hazardous waste rules. Businesses include farms, building and painting contractors, maintenance companies and other firms that produce wastes similar to households.

Waste from institutions, schools and government are also handled as business waste. Waste should be suspected as generated by a business or institution if they are: large amounts of the same waste, items not normally intended for residential use, or delivery in a commercial vehicle. If there is any question that the waste is not from a household, ask the participant where it came from. If you still suspect the waste may be from a business, ask the individual to complete a form attesting that the waste is from a household (Figure 2). If the individual indicates the waste is commercial, or if the individual refuses to complete the form, do not accept the waste. Then record the business name and address, the participant's vehicle license plate number, telephone number and any other relevant information. Be sure to provide the participant with information on proper disposal of commercial hazardous waste, including the MPCA Disclosure Unit address and telephone. Submit this information obtained to the MPCA Disclosure Unit for follow-up.

The MPCA Disclosure Unit's address and telephone is:

Minnesota Pollution Control Agency
Hazardous Waste Division/Disclosure Unit
520 Lafayette Road N.
St. Paul, Minnesota 55155
Telephone: (800)657-3864

2.4.4.3.Procedures for Handling Special Waste Fluorescent tubes of various sizes shall be collected and packaged at the Hibbing Facility. Tubes from businesses shall be charged through the scale house operator, as part of their normal operations. Anti-freeze can also be collected at this facility, but it is accepted every operating day at the Hibbing Transfer Station.

2.4.4.4.Procedures for Handling Picric Acid, Ethers, Ammunition and Explosives. Ethers and picric acid are chemicals that may become critically unstable and explosive over time. These items can be detonated by impact. Even though it is advertised that this facility does not accept explosives, the following should be accepted but not stored in the facility: ammunition, fireworks, blasting caps, and other explosives. If ethers, picric acid, ammunition and explosives are brought in, handle as little as possible and with extreme care. Immediately remove these items from the collection area to the

remote area designated for short-term storage of explosives, or if more prudent, have the vehicle drive to a remote area to wait the for the emergency squads. Immediately notify the emergency coordinator(who may be present), and the local law enforcement agencies, and/or the Regional Bomb Squad. These items can be lab packed if they are deemed "stable" by one of the above-mentioned specialists. Arrangements shall be made with the St. Louis County Sheriff=s Office to accept and dispose of explosive material. Attachment 3 documents the Sheriff Department=s agreement of this provision and describes handling and short-term storage procedures for explosives at the St. Louis County Household Hazardous Waste Management Facility.

2.4.5. **Remove Waste From Vehicle.** If the conditions in Section 2.4.4.1. through 2.4.4.3. do not apply, remove the waste from the participant's vehicle and place in the waste sorting area. During this process, be aware of heavy boxes, boxes with weak bottoms, or containers in poor condition. Follow safe lifting procedures and get assistance for heavy items. Items can be unloaded individually. At this time, the participant may be allowed to get out of the vehicle to open a car trunk or otherwise oversee and assist the removal of the waste from the vehicle, as directed by facility staff. Participants should not be encouraged to unload vehicles unless assisted by trained staff. From the vehicle, deliver the waste to the waste sorting area for further review. Alternatively, waste can be delivered onto the receiving carts, or put on the top of the cubic yard boxes for sorting later in the day. It is better to immediately separate reactive, oxididers, organic peroxides, and corrosives immediately from the load.

2.5. **Evaluate the Waste.** In the waste sorting area, evaluate the containers, according to the following criteria while the participant waits:

2.5.1. Discourage Wastes. Many materials that are brought to household hazardous waste collections are nonhazardous, usable or can be safely treated and disposed of by the homeowner. Facility staff should discourage participants from depositing these wastes at the collection site for disposal. A partial list of discouraged wastes includes:

Usable Paint	Cleaning Products
Motor Oil	Car Batteries
Antifreeze	Garbage

As common practice, efforts should be made to either direct the participant to a reuse/recycling outlet or provide the participant with a fact sheet and explanation of disposal alternatives. A detailed listing of disposal options for many products is included in the MPCA's Telephone Advice Guidance Manual.

2.5.2. Unacceptable Wastes. In addition to materials that can be disposed

of or recycled by the homeowner, the following problem wastes cannot be accepted at the facility:

2.5.2.1. Radioactive Material. Radioactive material cannot be disposed of through the MPCA's contractor and, therefore, cannot be accepted at the collection site. If radioactive material is delivered, return the material to the participant, record the participant's name, address and telephone number, and contact the MPCA for further guidance. The exception is that smoke detectors from homeowners which contain small amounts of radioactive material may be placed in the trash or returned to the manufacturer. Businesses do not have this option.

2.5.2.2. Unknown or Unlabeled Materials. Unknown waste must be discouraged for accepted of disposal. Without knowing the material's chemical constituents, it is difficult to store or dispose of safely and properly. A known, but unlabeled material can be accepted if the participant is able to identify it with certainty. If that is the case, label the material accordingly and handle it appropriately. Ask the owner of the waste for what purpose it was used. If not known, try to identify the wastes of the load in general. If a liquid, pH the waste to determine if an acid or a base, and place in proper waste category.

2.5.2.3. Nonhazardous Waste. Nonhazardous waste delivered to the collection site can be rejected and returned to the participant for proper at-home treatment and/or disposal, but will also be accepted if non-typical of municipal solid waste. Solid waste shall be referred to the Solid Waste operators.

2.5.2.4. Business Waste. See Section 2.4.4.2.

2.5.2.5. Explosives and Shock Sensitives. See Section

2.5.4. Acceptable Wastes. Waste accepted for disposal includes all other hazardous materials that cannot be reused, recycled, or safely disposed of by the participant. Such materials are likely to include:

Home and Garden Pesticides

Chlorinated and Flammable Solvents

Corrosives

Contaminated/Unusable Fuels

Unusable Oil Based Paint
Specialty Paints and Coatings
Unusable Solvent-based Products
Car Fluids and Cleaners
Adhesives/Cements/Glues
Aerosols
Other Miscellaneous Items

A more detailed listing of these materials is included in the Hazard Categorization Procedures Section.

2.6. **Presort Waste.** When each container has been evaluated according to the previous criteria and problem wastes have been handled properly, the participant may leave the collection area. Simultaneously or immediately after inventorying the waste, the waste must be grouped into presort categories. The purpose of the presort categories is to separate incompatible materials and group wastes into similar categories to allow for short-term storage. The collected material must be sorted into at least the following categories in the presort area:

1. Acids
2. Bases
3. Flammable Liquids/Solvents
4. Oxidizers
5. Pesticides
6. Aerosols
7. Paint
8. Flammable Products
9. Mercury items
10. Other

Once sorted into the above categories, the materials may be stored in the presort area for up to a week provided some secondary containment is provided and each category is physically segregated from the others. Materials must be placed in drums, bulked, or lab-packed for long-term storage at least weekly.

3.0 CATEGORIZING AND PACKAGING COLLECTED WASTE.

Collected wastes must be further sorted into compatible hazard classes after being presorted and then packaged into the appropriate containers in order to be safely and legally stored and transported.

3.1. Hazard Class Sorting. When some household hazardous waste are mixed, they can produce a dangerous chemical reaction resulting in spontaneous combustion or the production of heat or a toxic gas. The purpose of hazard class sorting is to separate materials into similar categories and keep incompatible materials apart to minimize the possibility of an accident. Based on an evaluation of the product ingredients, label warning, and other factors, the collected materials are separated into one of at least 14 waste categories, which are based on transportation and disposal requirements of the state waste contractor:

1. Latex Paints
2. Oil Paint
3. Aerosols
4. Corrosives (acid)
5. Corrosives (base)
6. Flammable Liquid
7. Flammable Solid
8. Pesticides
9. Flammable Products
10. Poison
11. Organic Peroxides
12. Oxidizers
13. Ballasts with PCB=s
14. Mercury

For the purpose of categorizing wastes, a detailed description of the process, relevant reference materials, and a listing of products and ingredients are compiled in a Appendix A, Hazard Categorization Procedures. Please also refer to the reference manual of the state waste contractor who is: Veolia Environmental Services, LLC for most wastes.

3.2. Packaging the Waste for Storage and Transportation. Once the hazard class has been determined and the material's compatibility with other material has been confirmed, the material can be packaged or poured into the appropriate drum. Only drums or containers that meet the Department of Transportation requirements are used to store and transport the waste.

3.2.1. Preparing Drums for Packaging . Only the current specifications for packaging distributed by the HHW disposal contractor shall be used. See Appendix B.

3.2.2. Complete drum inventory sheet. Drum inventory sheets should be properly completed when required by the waste contractor (refer to Hazard Categorization Training Manual and training supplied by the State Contractor.

3.2.3. Complete hazardous waste label. All drums should be labeled in compliance with UN and DOT standards. Refer to the current Hazard Categorization book supplied by the State Contractor.

3.2.4. Absorbants. Place two to three inches of absorbent on the bottom of each lab pack drum when required. At least one drum for each waste category must be available at all times. When a drum is full, prepare an additional drum for that waste category. Drum type, packing material, hazard label and other information needed to prepare the drums are listed on Figure 6. The absorbent must be compatible with the waste material to be packed.

3.2.5. Log In Waste. Each item placed in a lab pack drum must be listed on an inventory sheet specific to that drum, if required by the waste hauler. Refer to Appendix B for specific information. This inventory sheet must stay with the drum at all times. When the drum is full and ready for

shipment, a copy of the inventory sheet must be placed in a protective covering and attached to the drum as required by the Department of Transportation.

3.2.6. Lab Packing Guidelines. The containers inside a lab pack must be nonleaking and tightly sealed. Leaking or damaged containers are to be repacked in a nonleaking container. Once the material has been entered on the inventory sheet it is placed into the drum. Items should be placed in the drum so they are not in contact with one another. Once a Alayer" of containers has been completed, pour in additional absorbent to cover the layer just completed. Repeat this process until the drum is full. The absorbent used must be inert and not capable of reacting with the waste. There should be enough absorbent in the drum to sufficiently absorb all the liquid in that particular drum. Requirements for drum types and labeling, as well as appropriate types of absorbent for different wastes, are listed in Appendix B.

3.2.7. Bulk Packing Guidelines. Paints, paint-related products, flammable solvents and liquids are poured or bulked into 55-gallon drums and labeled in compliance with DOT regulations and current disposal contracts.

4.0 PROPER WASTE STORAGE PRACTICES AND MANAGEMENT OF CONTAINERIZED WASTE

4.1. General Guidelines. The following guidelines apply to the management of containerized waste and must be followed by all to comply with MPCA guidelines.

4.1.1. Containers holding wastes must be kept closed during storage.

4.1.2. Aisle space must be maintained in the waste storage area to ensure the unobstructed movement of personnel and emergency equipment.

4.1.3. The storage area must be inspected by the facility staff person at least weekly to check the condition of the containers and the storage area. At a minimum, the items listed in Figure 7 (an example of an inspection checklist) must be checked. All inspection checklists must be kept on site. In addition, the MPCA will periodically conduct inspections of storage facilities. A listing of the MPCA inspection criteria is available on request.

4.1.4. An up-to-date inventory of all drums that contain waste must be kept at the Facility. The Drum Inventory Sheet must be used to keep track of the status of drums that contain waste. Also information recorded on the Drum Inventory Sheet can be used as a reference when

completing the quarterly and annual reports. Figure 9 is an example of a Drum Inventory Sheet.

4.1.5. Waste may be stored over 90 days at a the Facility in compliance with the MPCA permit; however, it shall be the policy of the St. Louis County Household Hazardous Waste Management Program to transport full drums to the WLSSD Regional facility at the earliest possible date after they are full.

5.0. TRANSPORTATION MANAGEMENT OF WASTE

5.1. Shipments from the Facility.

5.1.1 **Lab packed and bulked drums**. St. Louis County staff shall transport filled drums to the Western Lake Superior Sanitary District HHW facility in compliance with the SO/CO contract. Lab packed and bulked drums generated at the Hibbing HHW Building shall be transported to the Regional Landfill HHW Facility in Virginia no later than 90 days after the drum has been sealed and dated full. The large HHW truck shall be used to transport these drums.

5.1.2 **Contractor Services**. Under special circumstances (such as a contracted VSQG Collection on site) the Solid Waste Department HHW program administrator may approve pick up, by the disposal contractor or by WLSSD staff, at the Hibbing Facility for packaged waste drums.

5.1.3 **Fluorescent tube pick up.** Fluorescent tubes shall be packaged on site, and shipped by the HHW pick-up to the Regional Landfill HHW site, where they shall be recycled by the County=s Bulb recycler (Veolia Environmental Services), but is usually transported by Retrofit Recycling.

5.2 Receiving waste from mobile collections. In general, The Hibbing HHW Building is not to receive HHW collected from other mobile collections, unless there are unusual circumstances involved that necessitate it to be needed.

6.0 **CLOSURE.** If for any reason the collection facility must be permanently shut down, the Solid Waste Department must implement a maintenance plan to eliminate the possibility of contaminating the environment due to any hazardous materials or debris left at the facility. This section identifies the steps that need to be taken by the Department in closing the facility at the end of its operating life.

6.1. General Closing Procedures.

6.1.1. At least two weeks prior to closing the facility, publicize and notify local media that the facility will no longer accept waste.

6.1.2. Close facility and terminate accepting waste.

6.1.3. Within 10 days of closing the facility, properly package and bulk all accumulated waste.

6.1.4. Within 30 days of closing the facility, send to the WLSSD

HHW facility copies of all completed lab pack inventories for all drums containing waste. After this paper work has been reviewed by WLSSD staff, a date will be scheduled to pick up or deliver the waste.

6.2. Decontamination. Once the facility has been cleared of all waste-containing drums, decontaminate the facility.

6.2.1. Cleanup Materials. The following materials will be needed to properly decontaminate the collection and storage facility:

___1 Industrial mop
___1 Long-handled squeegee
___1 Long-handled plastic shovel
___2 Brooms (different sizes)
___1 Plastic dustpan
___Safety equipment
- ___All purpose Tyveks
- ___Latex gloves
- ___Safety glasses
- ___Rubber booties
- ___Scrub brushes

___Absorbents and neutralizing materials
___Hose and water
___Mild detergent

6.2.2. Wear safety equipment at all times during decontamination.

6.2.3. Absorb spills with appropriate absorbents. Lab pack the contaminated absorbents and properly label for disposal.

6.2.4. Sweep the entire facility. The sweepings collected can be disposed of in a debris drum.

6.2.5. Wash the facility with the industrial mop using a mild detergent. Scrub down any stains or problem areas with the scrub brushes.

6.2.6. Collect all wastewater in a 55-Gallon drum. Sample and analyze the drum contents through the MPCA's contractor. If the contents are deemed hazardous, dispose of the drum as a hazardous waste. If the contents are nonhazardous, the contents most probably can be disposed of in the sewer.

6.2.7. Dispose of all equipment used to decontaminate the facility as a hazardous waste in a debris drum.

6.2.8. The above procedures must be carried out to the satisfaction of the MPCA.

6.3. End of Operating Report. Complete an End of Operation Report. Include all information that would be included in a quarterly report, plus a detailed description of the closing procedures performed. Also include an explanation of why the facility is discontinuing operations.

FIGURES

1. Survey Form
2. Nonbusiness Certification Form
3. Drum Inventory Sheet
4. Hazardous Waste Label Example
5. Hazardous Waste Label Chart
6. Drum Preparation Table
7. Regional Facility Weekly Inspection Checklist
8. Regional Facility Drum Inventory
9. Incoming Drum Log from Local Facilities

ATTACHMENTS (Site Specific - To be Prepared by Regional or Local Facility)

1. Description and Diagram of Collection and Storage Area
2. Site Specific Procedures
3. Explosive & Shock Sensitive Handling Procedures and Arrangements for Disposal

APPENDIX A - Hazard Categorization Procedures

APPENDIX B - Contract with WLSSD

APPENDIX C - St. Louis County Emergency Procedures.

St. Louis County Household Hazardous Waste Management Program

FORM ATTESTING THAT WASTE IS FROM A HOUSEHOLD ACTIVITY

MPCA Regional Household Hazardous Waste Management Program

To be filled out by Receiving Personnel:

Waste:	Type	Amount

Received by: _____ Date: _____

To be filled out by participant:

Name: _____
Address: _____
City/State/Zip: _____

Telephone: _____
Driver=s License number: _____

I CERTIFY THAT THIS MATERIAL IS HOUSEHOLD HAZARDOUS WASTE AND NOT GENERATED BY A BUSINESS, NON-PROFIT ORGANIZATION, SCHOOL, COMMERCIAL FARM, OR OTHER COMMERCIAL OPERATION.

SIGNATURE: _____
Date: _____

WASTE LABELING AND TRACKING GUIDE

Waste Description	DOT Description	DOT Labels	EPA CODES
Acid Organic Loosepack	UN3264, Waste corrosive liquids, acidic, inorganic, nos, 8, , PGII	**8**	**D002** Vermiculite / Clay
Acid Loosepack *	UN1950, Waste aerosols, flammable, 2.1,	8	D002 Vermiculite / Clay
Aerosols	UN1950, Waste aerosols, flammable, 2.1,	2.1	D001 None
Aerosols Pesticide *	NA2212, Waste asbestos, 9, , PGII	2.1	D001 None
Asbestos *	UN3266, Waste corrosive liquids, basic, inorganic, nos, 8, , PGII	9	None Vermiculite / Clay
Base Loosepack *	None	8	D002 Vermiculite / Clay
Batteries NiCd	UN3090, Lithium battery, 9, , PGII	None	none None
Batteries Lithium	UN1935, Waste cyanide solutions, 6.1, , PGII **(Need inventory sheet)**	9	None None
Cyanides Labpack *	Depends on cylinder	6.1	Varies Vermiculite / Clay
Cylinders/extinguishers	UN2813, Waste water reactive solids, nos, 4.3, , PGII **(Need inventory sheet)**	2.1 2.2	None Vermiculite
Dangerous when wet Loosepack *	UN2903, Waste pesticides, liquid, toxic, flammable, nos, 6.1, PGII **(Need inventory sheet)**	4.3	D001, D003 Vermiculite / Clay
Direct Charge	UN 1263, Waste Paint Related Material, nos, 3, PGII	3	D001, U070, U080, U211, U226 Sawdust / Vermiculite
Flammable Loosepack	UN1325, Waste flammable solids, nos, 4.1, PGII	3	D001 Sawdust / Vermiculite
Flammable solid Loosepack	UN3077, Environmentally Hazardous Substances, Solid, n.o.s., (Lamps Containing Mercury) 9, , III Used on Shipping Papers	4.1	D001 Sawdust/Vermiculite
Fluorescent Bulbs	UN2809, Waste mercury, 8, , PGII **(Need inventory sheet)**	None	None None
Mercury *	None	8	D009 Vermiculite / Clay
Oil filters	UN3105, Waste organic peroxide type D liquid, 5.2, , PGII **(Need inventory sheet)**	None	none None
Organic Peroxide Loosepack *	UN3139, Waste oxidizing liquids, nos, 5.1, PGII **(Need inventory sheet)**	5.2	D001, D003 Vermiculite / Clay
Oxidizer Loosepack *	Non DOT Non RCRA Regulated Material (Latex Paint)	5.1	D001 Vermiculite / Clay
Paint B Latex Quarts/Gallons	Non DOT Non RCRA Regulated Material (Latex Paint)	None	None None
Paint B Latex 5 gallon pails	UN1263, RQ Waste paint related material, 3, PGII	None	None None
Paint B oil based	UN2903, Waste pesticides, liquid, toxic, flammable, nos, 6.1, PGII **(Need inventory sheet)**	UN1263	D001, D007, D008 None
Pesticide Liquid Loosepack *	UN2903, Waste pesticides, liquid, toxic, flammable, nos, 6.1, PGII **(Need inventory sheet)**	6.1, 3	Varies Sawdust / Vermiculite
Pesticide Solid Loosepack *	UN2810, Waste poisonous liquids, nos, 6.1, PGII **(Need inventory sheet)**	6.1, 3	Varies None
Poison Loosepack *	UN3190, Waste self heating solids, inorganic, nos, 4.2, PGII **(Need inventory sheet)**	6.1	Varies Vermiculite / Clay
Spontaneously Combustible Labpack *	Antifreeze for recycling	4.2	D001, D003 Vermiculite / Clay

Antifreeze	None	None	None
Driveway sealer B latex	UN1993, RQ waste flammable liquids, nos, 3, PGII	None	None
Solvents	None	3	D001, D018, D035, F002, F003, F005
Used Oil		None	none

* Add AStart Date@, AFill Date@, AWeight@, and ADOT Shipping Name@ to Regulated material=s Inventory

RLF HHW Building & Haz-Store Inspection Report

RECEIVING ROOM **Date**_____ **Name**_____

Fire Extinguisher(in place/pressurized)_____
Bins(which ones full)_____
Tables(orderly/product on top/unsorted waste?)_____
Carts(full/unsorted waste?)_____
Eyewash(functional 3 minutes?)_____
Water Temper Gauge(functional?)_____
Floor Space(cluttered?)_____

PRODUCT EXCHANGE ROOM

Fire Extinguisher(in place/pressurized)_____
Shelves(in order?)_____
Table(adequate waivers/orderly/no trash)_____
Floor Space(uncluttered)_____
Display Racks(orderly/need refilling)_____
Leaky Containers(clean-up needed)_____

LAB PACKING ROOM

Fire Extinguisher(in place/pressurized)_____
Eyewash(functional 3 minutes?)_____
Shower(functional?)_____
Shelves(orderly/not cluttered/waste?)_____
Barrels(labeled/rows/not blocking/#ed/leaking?)_____
Floor Space(adequate to move barrels)_____
Bins(which ones full)_____

BULKING ROOM

Fire Extinguisher(in place/pressurized)_____
Bulking Machine(Cleaned/operational)_____
Barrels(labeled/rows/not blocking/#ed/ leaking?)_____
# of drums & type_____
Floor Space(adequate to move barrels)_____

BATHROOM & OFFICE

Toilet(functioning/clean)_____
Sink(functioning/clean)_____
Shower(functioning/clean)_____
Holding Tank(Green light on?)_____

HAZ-STORE

Barrels(labeled/rows/not blocking/#ed/leaking?)_____
Floor Space(adequate to move barrels)_____
Grounding Straps(Flam Liquid drums grounded to Bldg)_____

TRAILERS

Fluorescent Tubes Secured_____
Aisle(adequate to work)_____
Containers Secure_____
Latex Quarts Secure_____
Rendering Tank secure_____

Site Specific Fill-In Duties for St. Louis County Virginia HHW Bldg

Open Hours 8:00AM - 1:00PM, I would suggest you arrive by 7:30AM

Check the Walkie-talkie on the initial table into the receiving room, as this is one of our safety measures in case you need help. Make sure it functions before taking it. These walkie-talkies have been known to run out of power. Talk to Scale Shack attendant if walkie-talkie doesn=t work.

Most PPE is in the cabinet under the furnace in the rear lab-packing room. Some Tyvek Suits are on upper selves in the same room.

Latex paint(gallons) is packed into the paint room cart, but is also put on the floor next to the cart when it is full. Oil base(gallons/qts) and Latex (Qts) are packed into 55 gall metal open head barrels in lab-packing room. These barrels need to be opened upon arrival and closed before leaving. There are extra barrels outside that can be brought in if one barrel gets filled.

Sorting waste needs to be completed before leaving. There should be plenty of labeled bins for hazardous waste, and some unlabeled to use for odd things.

There are OPEN & CLOSED signs on each side of the Drive-through that will need to be flipped appropriately upon arriving and leaving.

The gate to the HHW entrance is locked with a padlock, which is the same lock as the Haz-Store.

You should have a set of keys which include a main gate key, a HHW Bldg key, a Haz-Store Key, and a padlock key. If not, there is a set of HHW keys in the scale house on the bulletin board with a fluorescent green tab that says AHHW@.

There is a side mechanism on each HHW door which will click to locked or unlocked. Obviously, doors must be locked by the end of the day.

There are snow shovels/scoop/salt available near the canopy entrance to deal with the snow and ice.

Remind customers to watch their step when coming into the Bldg.

First Aid kit is in the bathroom next to the sink.

Sawdust & Vermiculite are in barrels in the Lab-Packing room if you have a spill. There is also clay in 5 gallon buckets next to canopy & rear entrance for spills.

We do use surveys, and there should be plenty on a clipboard on the table at the canopy door entrance.

We do accept Fl. Tubes from businesses for $0.50 per tube, no matter what the tube is (Ex. 4', 8', circular...). Count the # of tubes brought in, and contact the scale house by walkie-talkie(or call 741-8207 if w.t. isn=t working). The customer will pay at the scale house, and get a receipt there. Businesses can also bring in PCB ballasts(2 free, $8.00/ ballast after that, call scale house.)

We take the anti-freeze & put it in our sewerable bin, to be appropriately recycled later.

Customers dump their own oil (if uncontaminated), and can throw away the empty containers in an orange canister or blue trailer for municipal solid waste (msw). Customers also put their own batteries in the battery boxes (next to the oil tanks).

Refer regular garbage to other attendants

Propane Gas & Flammable Liquids are stored in the Haz-Store. The door handle-locks don=t reliably work, so we use padlocks. There is an open 55 gall closed-head Flammable Liquid Drum with a funnel in it available in the Haz-Store to dump out gas cans & such. There is a test bucket next to the open barrel to check compatibility. Dump contents into barrel by end of day. Empty closed head drums are available behind Haz-Store. Grab a 1 QT eyewash solution in the PPE

cabinet & open, so it may be used as a quick eye-wash in the Haz-store.

There is a 5 gallon bucket for Flares in the Haz-Store to the far left.

There is an explosive barrel containing sand, within to the far right of the Haz-Store.

THIS DOCUMENT MUST BE POSTED IN A CONSPICUOUS LOCATION

Event:Household Hazardous Waste Collection
Site Location:Virginia - St. Louis County Regional Landfill - HHW Building
5345 Regional Landfill Road Phone # 218-741-8831

Directions:From Virginia, travel south on Hwy 53. Turn left (east) onto Hwy 135 towards Gilbert. After going over the bridge, turn left immediately after the sign that says ASanitary Landfill@ (just before you get to the County garage). Go through the orange Landfill gates, and then travel approx. 2.5 Miles down the tar road, and you will come to HHW=s left exit before the scale house. If gate is closed, proceed forward to small brown hut and then turn left to get to HHW Building. If Building is locked, the HHW key is with scale attendant (landfill operator), on the bulletin board.

Dates and Hours of Operation:Tuesdays/Saturdays8:00am - 1:00pm

In the event of any emergency - Call 911 - Give all the available information.

Poison Control Telephone number: 800-222-1222
MPCA Spill Unit Telephone number 612-296-8100
Health and Safety Information Telephone number 888-673-7466
National Response Center number 800-424-8802
Chemical Referral (CMA) number 800-262-8200
MN State Duty Officer number 800-422-0798
St. Louis County Solid Waste office 749-9703
Environmental Troubleshooters 800-470-3536

Is the local fire department aware of this operation? YES NO

Is the local police department aware of this operation? YES NO

Is the nearest hospital identified and contacted? YES NO

AGENCIES CONTACTED:
911 Communications
Virginia
Virginia Fire Department
Virginia
St. Louis County Sheriff
Virginia
Virginia Regional Medical Center
Virginia
Virginia Police Department
Virginia

TAB F

ST. LOUIS COUNTY SANITARY LANDFILL, SW-405
APPLICATION FOR PERMIT RENEWAL

LEACHATE MANAGEMENT PLAN

Prepared for:

ST. LOUIS COUNTY, MINNESOTA

Prepared by:

LIESCH ASSOCIATES, INC.
350 ST. PETER STREET, SUITE 230
ST. PAUL, MN 55102
(651) 600-3502

and

NORTHEAST TECHNICAL SERVICES, INC.
526 CHESTNUT STREET
VIRGINIA, MN 55792
(218) 741-4290

JULY 2013
PROJECT NUMBER: SP137998

"I hereby certify under penalty of law that this document and all attachments were prepared under my direct supervision in accordance with a system designed to assure that qualified personnel properly gather and evaluate the information submitted. Based on my inquiry of the person or persons who manage the system, or those persons directly responsible for gathering the information, the information submitted is, to the best of my knowledge and belief, true, accurate and complete."

Eric Hesse, P.E. #22743

7/3/13
Date

TABLE OF CONTENTS

1.0 INTRODUCTION 1
- 1.1 PURPOSE AND SCOPE 1
- 1.2 GENERAL SITE INFORMATION 1
- 1.3 LEACHATE MANAGEMENT BACKGROUND 2
  - 1.3.1 Leachate Generation 3
  - 1.3.2 Leachate Quality 3

2.0 CURRENT LEACHATE COLLECTION AND STORAGE SYSTEM DESIGN 4
- 2.1 GENERAL OPERATION 4
- 2.2 LEACHATE COLLECTION SYSTEM 4
- 2.3 LEACHATE PRE-TREATMENT/STORAGE SYSTEM 7
- 2.4 LEACHATE LAND APPLICATION SYSTEM 7

3.0 PROPOSED LEACHATE LAND APPLICATION SYSTEM EXPANSION DESIGN 8
- 3.1 LEACHATE SPRAY APPLICATION SYSTEM 9
- 3.2 VEGETATIVE COVER CROP 9
- 3.3 PROPOSED SITE SOILS INFORMATION 10
- 3.4 LOADING RATE CALCULATIONS 10
  - 3.4.1 Hydraulic Loading 10
  - 3.4.2 Nutrient Loading 10
  - 3.4.3 Metals Loading 13

4.0 LEACHATE LAND APPLICATION SYSTEM OPERATIONS AND MAINTENANCE 13
- 4.1 APPLICATION TECHNIQUES 14
- 4.2 POTENTIAL AIR EMISSIONS 14
- 4.3 LEACHATE APPLICATION AREAS 15

5.0 LEACHATE LAND APPLICATION SYSTEM MONITORING AND REPORTING 15
- 5.1 LEACHATE MANAGEMENT SYSTEM 15
  - 5.1.1 Raw Leachate 16
  - 5.1.2 Leachate Storage Ponds 16
  - 5.1.3 Pond Liner Leak Detection 16
  - 5.1.4 Leachate Management Reporting 17
- 5.2 LEACHATE LAND APPLICATION SYSTEM 17
  - 5.2.1 Land Application Area Soil Sampling 17
  - 5.2.2 Leachate Monitoring for Land Application Events 18
    - *5.2.2.1 PFCs 18*
- 5.3 SAMPLE HANDLING, PRESERVATION AND MANIFEST 18

6.0 TRAINING AND SAFETY PROCEDURES 19
- 6.1 TRAINING 19
- 6.2 SAFETY PROCEDURES 20

APPENDICES

Appendix A	Table - 1	Actual Leachate Application Volumes
	Table – 2	Predicted vs. Actual Leachate Generation (2000 – 2012)
	Table - 3	Maximum Cumulative Addition Limits for Heavy Metals
	Table - 4	Raw and Treated Leachate Analytical Requirements
	Table - 5	Leachate Land Application Site Soil Parameters
Appendix B	Figure - 1	Landfill Location Map
	Figure – 2	Overall Leachate Management System Map
	Figure – 3	Existing Primary Spray Irrigation Field Layout
	Figure – 4	Proposed Secondary Spray Irrigation Field Layout
Appendix C	Current copy of WLSSD Permit	
Appendix D	Historical Leachate Data Tables	
Appendix E	Hydrogeologic Investigation Work Plan	
Appendix F	Quad Cities Biosolids Disposal Site Information	
Appendix G	Sample Preliminary Loading Calculations	
Appendix H	Leachate Pond Liner Evaluation Sheet	

1.0 INTRODUCTION

1.1 PURPOSE AND SCOPE

This document has been prepared as an update to the September 2007 Leachate Management Plan prepared as part of the previous application to re-permit the St. Louis County Regional Landfill (the Landfill). It is the intention of this document to outline a detailed plan for leachate management through land application of leachate, the Landfill's primary leachate management alternative. This plan will also provides for the emergency management of leachate off-site in case the leachate land application system is temporarily out of service.

This plan summarizes the current design of the leachate management system, proposed updates to the current land application system and the responsibilities and procedures involved with leachate management at the Landfill. Specific aspects of operation and maintenance of the leachate management system are discussed, including: sampling and analysis of leachate, monitoring of leachate volumes managed, transmission and application of leachate, maintenance and monitoring of the leachate land application areas, reporting requirements, and training and safety procedures.

Additional information about the leachate management system is contained in the Design Report, which discusses details of the leachate collection system and leachate generation rates. A summary of the leachate collection system design is given below. The Operations and Maintenance Plan, and Closure, Post-Closure, Contingency Action Plan and financial assurance documents also give supplementary information about the leachate management system as it pertains to the intent of each report.

This plan serves as a stand-alone document for the management of leachate in support of Minnesota Solid Waste Rules, Part 7001.3300, Item R. It will serve as guidance to the owner and operator of the facility, along with other necessary guidance material.

1.2 GENERAL SITE INFORMATION

The Landfill is located on a 637-acre piece of property in the City of Virginia, St. Louis County, Minnesota. The Landfill is used for the disposal of mainly mixed municipal solid waste but also accepts a limited amount of industrial, demolition and asbestos waste. The Landfill is lined and encompasses a permitted fill area of 42 acres. The original 5-year permit was issued on April 30, 1993 with initial operation beginning on November 15, 1993. The permit was reissued in 1999, 2003 and 2008 for additional 5-year permit cycles. Delineation of the current Landfill property boundary is indicated on **Figure 1** in **Appendix A** as well as on the Engineering Drawings. The

layout of the permitted lined area and existing overall leachate collection system is illustrated on **Figure 2** in **Appendix A**.

The waste disposal area consists of the total of 10 lined cells. Construction of Phase 1A was completed in 1993. Construction of lined cells is currently completed through Phase 6 which was completed in summer of 2012.

1.3 LEACHATE MANAGEMENT BACKGROUND

The first lined cell of the Landfill (Phase 1) was constructed in 1993 with a leachate management system based upon storage in aerated leachate storage/treatment ponds and spray application. Land application continues to be the primary leachate management alternative for the Landfill. The County also obtained a permit from the Western Lake Superior Sanitary District (WLSSD) to dispose of leachate within the WLSSD sanitary sewer disposal system in case the spray application facility was unavailable or excessive leachate volumes are generated. Refer to a copy of the current WLSSD permit included in **Appendix C**. To date, however, the County has managed all leachate generated at the Landfill through spray irrigation from the commencement of operations of the Phase 1 to the present. The Landfill will also continue to maintain its permit with WLSSD in order to have the option to haul leachate to the designated disposal point on an emergency basis.

Since 1994, leachate has been treated by an on-site spray irrigation system which included the 22.5-acre Primary Spray Irrigation Field. In 1999, a temporary spray irrigation field south of the Primary Spray Irrigation Field was constructed to provide additional, but temporary, leachate spray irrigation capacity within the permitted footprint of the Landfill. In 2008, the six (6) sprinkler nozzles and irrigation lines within the southern temporary spray irrigation field were removed to allow for the development of future Landfill cells.

In 2009, the County upgraded its leachate spray irrigation system. The major components of the upgrade included the installation of a larger vertical turbine pump, seven (7) electronically actuated valves, and an electromagnetic flow meter. Additionally, upgrades to the Primary Spray Irrigation Field included installation of 6-inch pipe throughout the 22.5-acre land application field and five (5) additional fixed head rotary gun-type sprinkler nozzles, increasing the total number of sprinkler nozzles to 21. These upgrades maximized spray coverage throughout the Primary Spray Irrigation Field and significantly reduced the amount of maintenance required to keep the system operating efficiently. Leachate has been applied over the entire 22.5-acre site since 2010.

Land application continues to be an effective, environmentally suitable technique for leachate disposal at the Landfill. The principals of treatment involve the physical and biological

processes of attenuation, adsorption, oxidation, photolysis, volatilization, microbial action, and crop recovery to assimilate and eliminate the contaminants of concern from the leachate. The design parameters for the leachate management system discussed in this Plan were based upon the MPCA's April 2011 *Land Treatment of Landfill Leachate* guidance document, MPCA's stabilization pond design criteria, Minnesota Rules Chapter 7040 Sewage Sludge Management, agronomics, leachate characteristics and annual leachate generation.

1.3.1 Leachate Generation

The amount of leachate generated at the Landfill is dependent on many factors. These factors include, but are not limited to, the amount of precipitation received at the Landfill, the size of the open and closed portions of the Landfill, and the types of wastes received.

The Landfill initiated land application of leachate in 1994, and since then approximately 80-million gallons of leachate have been successfully land applied to date. **Table 1** in **Appendix B** presents data on actual annual leachate application since 1994.

The potential quantity of leachate generation at the Landfill has been estimated using the Hydrologic Evaluation of Landfill Performance (HELP) model in conjunction with the observance of actual leachate generation volumes recorded since the collection of leachate began in 1994. A detailed discussion of these predicted leachate volumes are presented in the Design Report submitted as part of this permit application.

The volume of leachate generation predicted by the HELP model following the 3.8 acre closure of Phase 1A in 2000, and the open cell modeling for the remainder of Phases 1 and 1A, and Phases 2, 3, 4 and 5 yielded a total predicted leachate volume of 66,167,124 gallons for the years 2000 - 2012. When accounting for annual storage volumes in the ponds, this compares favorably to the volumes of actual leachate land applied during the same time period (60,304,000 gallons). **Table 2** in **Appendix B** presents a comparison of the leachate volume predicted by the HELP model from 2000-2012 to the actual volume of leachate land applied from 2000-2012.

1.3.2 Leachate Quality

The principal contaminants of concern in landfill leachate are generally nitrogen, BOD, volatile organic compound (VOCs), semi-volatile organics, metals, and salts. A summary of leachate quality data collected from the leachate manhole between the leachate storage/treatment ponds since 1993 is contained in **Appendix D**. In addition, leachate samples collected for nitrogen during spray application events in 2012 are included in **Appendix D**. The concentrations of the majority of the parameters identified in the Landfill's leachate are typically less than the mid-range values listed in the MPCA's April 2011 *Land Application of Landfill Leachate*.

Parameters exceeding the high end range of values listed include salts, Ammonia nitrogen in the ammonia form (restricted to untreated leachate), and nitrogen in the nitrate – nitrite form.

2.0 CURRENT LEACHATE COLLECTION AND STORAGE SYSTEM DESIGN

2.1 GENERAL OPERATION

The leachate collection systems for Phases 1/1A, Phases 2/3, Phase 4/5 and 6 (2012) were constructed to collect and convey leachate over the composite liner to single collection sumps located within Phase 1, Phase 2, Phase 4 and Phase 6. The sumps incorporated side-slope risers to eliminate penetration of the liner. The side-slope riser pump-out system for Phases 1/1A did not perform as originally designed. The County believes that was due in part to the lack of a direct piping connection between the manhole and the side-slope riser pump. To address this, the County installed an additional pumping system in the Phase 1 manhole to pump leachate directly from the manhole. This second system handles the majority of leachate from Phases 1 and 1A.

The manhole system for Phase 2 was re-designed to incorporate a direct connection between the manhole and side slope riser. A manhole was not utilized in the Phase 4 or Phase 6 sump designs.

Leachate collected in each of the four sumps is conveyed via a single leachate force main to the leachate storage ponds where it is aerated as part of pre-treatment prior to land irrigation. After treatment in the ponds, the leachate is pumped to the spray irrigation area for crop uptake. The following discusses the current leachate collection and storage system in more detail.

2.2 LEACHATE COLLECTION SYSTEM

Collection Pipes

The collection pipes are six-inch diameter, perforated, Standard Dimension Ratio (SDR)-11, HDPE pipe. Locations and inverts of collection pipes are shown on Plan Sheet 3 of 18 in the Engineering Drawings.

Access to the leachate collection pipes is provided by cleanout risers, which extend up the side slopes to allow easy access. As with the construction of Phases 2/3, Phases 4/5 and Phase 6, future cell construction will provide cleanout risers on the east and west side slopes of the landfill to ensure access from either direction. Cleanout of the collection pipes is conducted as required in the Operations and Maintenance Plan.

A 6-inch diameter HDPE pipe at 1.0 percent slope has a hydraulic capacity of 273 gallons per minute. The pipe in this design is not sized for flow capacity, but to provide sufficient strength and to allow for use of standard sewer pipe cleaning and maintenance equipment. The peak flow expected in any leachate pipe was calculated using the HELP model leachate generation rates, in the active condition, at 4.1 gallons per minute.

The collection pipes are placed in trenches. Coarse aggregate is used as bedding and also mounded over the pipes to protect them from loadings from landfill equipment and the waste mass.

Special care is taken to properly align the pipes according to the invert elevations and locations. The perforations are oriented to be on the bottom of the collection pipe during construction.

A graded filter consisting of a layer of coarse aggregate and intermediate aggregate, as specified in the Technical Specifications for construction, is placed over the placed collection pipe to keep waste materials from significantly affecting the collection pipe flow. A layer of coarse aggregate 3 inches thick is placed in the trench and the pipe is placed and aligned. The remaining coarse aggregate followed by the intermediate aggregate layer are placed after the pipe is fully installed. The granular drainage layer material is then graded over the trench. Refer to Plan Sheet 7 of 18, Detail 1 of 7 in the Engineering Drawings illustrating the cross-section of the standard leachate collection trench.

Leachate Storage Sump

Leachate collection pipes convey the leachate to storage sumps at the low elevation of the easterly end of the Landfill cells 1, 2, 4 and 6. The sump area and manhole serve as a wet well for the side slope. The sump consists of a 6-foot deep depression in the liner system and will be filled with coarse aggregate. Leachate in the landfill that flows to the sump area will then be pumped to the leachate ponds.

Leachate Head Build-Up

HELP calculation of the estimated leachate head build-up in the granular drainage layer over the liner indicates a peak daily leachate head build-up of 0.3 inches for the part of Phase 1A that is closed, 7.9 inches for Phases 1 & 1A that are currently open, 8.2 inches for Phase 2, 8.4 inches for Phase 3, 8.5 inches for Phase 4, 8.5 inches for Phase 5. Leachate head will be monitored continuously at the riser in accordance with the operations and maintenance plan.

Leachate Sump Manhole

The manholes in Phases 1 and 2 provide redundancy for removing leachate if the sideslope risers fail. They also provide a means of direct measurement of leachate head and a means of

calibrating the leachate pressure transducer. The manholes were placed on top of a 1-inch thick sheet of HDPE flatstock to protect the liner. In addition, the lower section of the manhole was perforated to allow leachate to flow in.

As indicated above, no manholes were incorporated into the sump designs for Phases 4 and 6. However, each sump has been constructed with two 18-inch sump pump access pipes for redundancy. Leachate head is measured via digital readout through the PLC system in the blower building for these phases.

Side-Slope Risers

In Phase 2, a side-slope leachate riser connects to the manhole in the leachate storage sump. The riser is installed above the 60-mil HDPE liner and up the side-slope to a riser vault and consists of an 18-inch, SDR-11, HDPE perforated pipe that houses the leachate extraction pump.

The side-slope riser design for Phase 4 and Phase 6 are similar to the Phase 2 design, except that the side-slope riser is located in a side-slope riser trench.

Leachate Sump Leak Detection

A leak detection system for Phase 6 was installed beneath the leachate storage sump similar to Phases 1, 2 and 4. The leak detection system consists of horizontal 4-inch perforated SDR 11 pipe connected to 4-inch non-perforated SDR 11 pipe approximately 5 feet inside the secondary liner system. This ensures that no leachate is transmitted outside the secondary liner system by the leak detection system. Coarse aggregate was placed around the perforated pipe. The horizontal, non-perforated, leak detection pipes are connected to vertical 6-inch non-perforated riser pipes that extend approximately 3 feet above the top of the berm.

Leachate Lift Station and Forcemain

Leachate collected in the sump area is pumped via a side slope riser system to the riser vault located on top of the east berm. At this point, the system is connected to the existing 3-inch SDR-11 force main, encased in a 6-inch HDPE protective pipe which conveys leachate to the leachate ponds. A manhole will be installed at the connection point along with check valves to allow proper operation of existing and proposed pumps. See Plan Sheet 13 of 18, Detail 5 of 13 in the Engineering Drawings for more detail.

Refer to **Figure 2** in **Appendix A** illustrating the overall layout of the overall leachate management system.

2.3 LEACHATE PRE-TREATMENT/STORAGE SYSTEM

Leachate Storage Ponds

Two leachate storage ponds were constructed with a composite liner system in 1993. Both ponds are aerated and are operated, in series, with leachate treated in the first pond and then flowing into the second pond. Aeration for the treatment process is provided by two 50 HP, 908 LFM blowers, and piping to diffusers in the pond bottoms. The blowers are housed in the adjacent blower building. Piping and manholes at the ponds allow for each of the ponds to be isolated. The ponds were designed to hold approximately 6 million gallons of leachate and have approximately 260 days storage based for peak generation rate estimates.

Effluent from the leachate treatment ponds is pumped to the irrigation site by a 250 gpm, 30 HP, vertical turbine pump, and through a force main consisting of 6-inch High Performance PE 4710 piping, installed during the 2009 leachate spray irrigation system upgrade.

Refer to **Figure 2** in **Appendix A** illustrating the location of the leachate storage ponds relative to the overall leachate management system.

2.4 LEACHATE LAND APPLICATION SYSTEM

Leachate Spray Irrigation Area

The Primary Spray Irrigation Area is approximately 22.5 acres in size and is shown on Figure 1 in the Design Report. The Primary Spray Irrigation Area consisted of 16 fixed head rotary gun-type sprinkler nozzles which distribute the leachate to the soil. The spray irrigation site was originally seeded with a variety of perennial grasses containing smooth brome grass, switch grass, birdfoot trefoil, reed canary, and perennial rye grass. Teed canary has become the dominant grass within the leachate spray radius. The begetation is harvested twice annually between June and September. The harvested grass is baled and applied as frost protection to new landfill cell construction areas.

In the summer of 1999, the leachate management system was upgraded by the addition of a Programmable Logic Controller (PLC), modifications to the existing sprayers and the installation of six additional fixed head rotary gun-type sprinkler nozzles installed around the perimeter of the leachate ponds. Soil water balance sheets were calculated for irrigation control of the spray irrigation areas.

Also in 1999, St. Louis County installed six fixed head rotary gun-type sprinkler nozzles on 9 acres within the current permitted footprint of the Landfill. This spray site was designed to provide the Landfill with additional, but temporary, leachate spray irrigation capacity.

In 2008, the six (6) sprinkler nozzles and irrigation lines from the temporary spray fiel were removed to allow for the development of future landfill cells.

In 2009, the County upgraded its leachate spray irrigation system. The major components of the upgrade included the installation of a larger vertical turbine pump, seven (7) electronically actuated valves, and an electromagnetic flow meter. Additionally, upgrades to the Primary Spray Irrigation Field included installation of 6-inch pipe throughout the 22.5-acre land application field and five (5) additional fixed head rotary gun-type sprinkler nozzles, increasing the total number of sprinkler nozzles to 21. These upgrades maximized spray coverage throughout the field and significantly reduced the amount of maintenance required to keep the system operating efficiently. Leachate has been applied over the entire 22.5-acre Primary Spray Irrigation Field since 2010. The Primary Spray Irrigation Field is illustrated on **Figure 3** in **Appendix A**.

3.0 PROPOSED LEACHATE LAND APPLICATION SYSTEM EXPANSION DESIGN

As discussed above and summarized in **Table 2** in **Appendix B**, the Landfill is currently applying leachate to the Primary Spray Irrigation Field in quantities ranging from approximately 4,000,000 to almost 6,000,000 gallons per year. With the addition of Phase 6 – 9 to the Landfill's footprint, over time this quantity is anticipated to increase. In an effort to maintain compliance with requirements for hydraulic, heavy metal and nutrient loading rates, the County is proposing the installation of up to an additional 38 acres of spray application area on property north of the Primary Spray Irrigation Field, referred to from now on as the Secondary Spray Irrigation Field. Refer to **Figure 4** in **Appendix A** illustrating the proposed layout of the Secondary Spray Irrigation Field.

The Secondary Spray Irrigation Field is proposed immediately north of the existing Primary Spray Irrigation Field on 160 acres currently administered for land application of waste water treatment biosolids by the Quad Cities Biosolids Disposal Site Authority (the Authority). The Authority administers land application of waste water treatment biosolids from the cities of Virginia, Eveleth, Gilbert and Mountain Iron. Each city each individual land application permits originally obtained in 1998 through the MPCA.

Each Authority has approved a proposal from the County to proceed with the formulation of a land purchase agreement for part, or all, of the 160 acres. Virginia currently produces dewatered class B biosolids that can be applied to agricultural fields as a beneficial use resulting in less acreage required at the Authority property. The proposed Secondary Spray Field is located on

Virginia's portion of the biosolids lands. After accounting for 100 foot buffer strips along the west and north, the proposed size of the Secondary Spray Application Field is 38.31 acres.

Prior to 1990, the proposed Secondary Spray Irrigation Field was an overburden and waste rock stockpile originally placed in association with the mining of the Rochleau Open Pit complex during the 1940s.

The following is a discussion of the preliminary design and loading calculations of the Secondary Spray Irrigation Field. Although some soils information is available from investigations and reports generated from the use of the Secondary Spray Irrigation Field as a biosolids disposal site, additional soils and groundwater data will be required to finalize loading requirements. A Hydrogeologic Investigation Work Plan (Work Plan) for the Secondary Spray Irrigation Field has been prepared by Northeast Technical Services, Inc. to be implemented upon its approval. Implementation of this work plan will further define soil conditions at the proposed Secondary Spray Irrigation Field in accordance with the MPCA's Land Treatment of Landfill Leachate guidance document dated April 2011. A copy of this Work Plan is included in **Appendix E** of this report.

3.1 LEACHATE SPRAY APPLICATION SYSTEM

The leachate spray application system for the Secondary Spray Application Field will be similar to the system installed on the Primary Spray Application Field. Distribution lines will be connected to the existing seven (7) stubbed out lines that were installed in 2009 at the blower building as part of the upgrades completed at the Primary Spray Application Field. Fixed head, rotary type sprinklers will be placed symmetrically over the Secondary Spray Application Field and connected to the distribution lines. Groups of rotary sprinkler heads will be designated as zones and operated separately from other zones by PLC controlled valves located within the blower building. Refer to **Figure 4** in **Appendix A** and the Engineering Drawings for a detailed layout of the proposed spray application system.

3.2 VEGETATIVE COVER CROP

The vegetative crop proposed for the Secondary Spray Application Field will be consistent with the vegetative crop implemented at the Primary Spray Application Field. The initial seeding will consist of a mixture of smooth brome grass, switch grass, birdfoot trefoil, reed canary, and perennial rye grass. As with the Primary Spray Application Field, reed canary grass is anticipated to become the dominant grass within the leachate spray radius. The vegetation will be harvested at least twice annually. The harvested grass will be baled and applied as frost protection and/or erosion control to new landfill cell construction areas.

3.3 PROPOSED SITE SOILS INFORMATION

Based on the review of the City of Virginia's Application Form for a Biosolids Site, soils at the Secondary Spray Application Field consist of medium, sandy, clay loam. Samples were collected from the soils at the time of the City's application and identified an organic content of 2.9%, Extractable Phosphorus ranging from 92 to 117 ppm, Exhangeable Potassium ranging from 100 to 130 ppm, pH ranging from 7.2 to 7.5 and Soluble Salts ranging from 0.3 to 0.4 mmhos/cm. Slopes at the site are less than 2%. Refer to **Appendix F** for information on the Quad Cities Biosolids Disposal Site.

As indicated previously, further investigation of soils will be completed in accordance with the MPCA's Land Treatment of Landfill Leachate guidance document dated April 2011. Refer to **Appendix E** for a copy of the work plan.

3.4 LOADING RATE CALCULATIONS

3.4.1 Hydraulic Loading

It is anticipated that hydraulic loadings will be similar to those typically applied to the Primary Spray Application Field. Leachate will be applied directly from the leachate manhole located between the leachate storage/treatment ponds. Leachate will be applied at a rate of approximately 250 gpm by the vertical turbine pump located on top of the leachate manhole. As indicated above, volumes of leachate applied over the Primary Spray Irrigation Field (22.5 acres) have ranged from 4,000,000 to 6,000,000 gallons over the past 5 years. Operations of the Primary Spray Application Field to date have not identified a problem with this hydraulic loading rate. Therefore the additional 38 acres of the Secondary Spray Application Field is anticipated to accommodate similar hydraulic loading rates, thereby at least doubling the current hydraulic loading capacity for the Landfill. For purposes of preliminary design, a typical hydraulic loading for the Secondary Spray Application Field is assumed to be 6,000,000 gallons.

3.4.2 Nutrient Loading

Nutrients of concern for leachate land application include total Nitrogen, Boron, Chloride, Cadmium, and Sodium Adsorption Ratio. The following is a brief discussion of the proposed loadings for each of the above discussed nutrients.

Nitrogen

The nitrogen loading rate proposed for the Secondary Spray Application Field will be the same as allowed under the current permit for the Primary Spray Application Field and is as follows:

- Nitrogen loading will not exceed 55 lbs/acre/year unless the vegetation is cut and removed once per year.

- Nitrogen loading will not exceed 110 lbs/acre/year unless the vegetation is cute and removed twice per year.

- Nitrogen loading will not exceed 165 lbs/acre/year unless the vegetation is cut and removed three times per year.

Historically, vegetation management on the Primary Spray Application Field has been to cut the vegetation two times per year. This cutting schedule will be maintained at the Secondary Spray Application Field. The material will be removed and utilized for frost protection for future liner construction and/or slope stabilization for the Landfill.

A sample calculation of nitrogen loading has been completed based on an assumed hydraulic loading rate of 6,000,000 gallons for the Secondary Spray Application Field. Leachate samples collected for nitrogen during application events from the spray sites (pan samples) were used for purposes of this calculation because they are believed to be more representative of what is actually applied to the spray sites. Calculations indicate that nitrogen loading will not exceed 165 lbs/acre at an hydraulic loading rate of 6,000,000 gallons. Refer to **Appendix G** for sample nitrogen loading calculations.

Boron

Per the MPCA's Land Treatment of Landfill Leachate guidance document dated April 2011, leachate spray site operator's must attempt to limit annual boron loading to 4 lbs/acre/year. The 4 lb/acre/year limit is the agronomic rate for boron. The vegetation in the Primary and Secondary Spray Application Fields will not harvested for consumption, so plant toxicity is not an issue.

The County will monitor the loading rate of boron on a per lb/acre basis. This will be done per event to each land application area and totaled. If a particular land application area has reached 4 lbs/ac the County will inspect the vegetation for evidence of toxicity, i.e. vegetative stress. The County will also collect a composite soil sample of the upper six inches of the application area for boron analysis. If the boron concentration in the soil is less than 2 mg/kg, and there is no vegetative stress, the County will apply boron to the land application area up to another 4 lbs/acre (a total of 8 lbs/acre). The same cycle of assessing plant and soil conditions will be utilized for another 4 lb/acre limit should the Landfill determine that additional land application may be necessary on a singular land application area. The maximum boron concentration to be applied is 12 lbs/acre. If it appears that grass suffers from the application of leachate or soils

accumulation of boron exceeds 2 mg/kg, land application will cease and be reassessed at that time.

A sample calculation of boron loading has been completed based on the assumed hydraulic loading rates of 6,000,000 gallons over the Secondary Spray Application Field as well as the combined Primary and Secondary Spray Application Fields. Results indicate predicted boron loadings are potentially greater than 4 lbs/acre/year. However, the robust monitoring program discussed above will allow the County to determine potential issues with the boron loadings before they become problems. Refer to **Appendix G** for sample boron loading calculations.

Cloride Loading

Typical chloride concentrations in 2012 treated leachate at the Landfill averaged approximately 1,000 ppm. This typical concentration results in a loading rate of 1,143 lbs/acre using the assumed hydraulic loading rate of 6,000,000 gallons over the Secondary Spray Application Field. The Landfill will monitor the vegetation for signs of stress due to chloride application and modify the application strategy as necessary. Refer to **Appendix G** for sample chloride loading calculations.

Cadmium Loading

The MPCA's Land Treatment of Landfill Leachate guidance document dated April 2011 requires a maximum annual cadmium loading of 2 lbs/acre for crop used as feedstock. The Landfill does not utilize the crop from either the Primary or Secondary Spray Application Fields for feedstock. Therefore cadmium loading rates based on toxicity do not apply at the Landfill.

Sodium Adsorption Ratio

The Sodium Adsorption Ratio (SAR) reflects the amount of sodium in the leachate in relation to calcium and magnesium. The method for calculating the SAR is included in Appendix D of the MPCA's Leachate Land Application Guidance document dated April 2011. The MPCA's guidance indicates that leachate with an SAR with 8.5 or less be used for leachate land application. SAR levels observed at the South Spray Site since 2009 have ranged from 6 to 9.25.

The MPCA guidance does not include discussion regarding the interaction of specific conductance and SAR and how it may affect the suitability of leachate for use as irrigation water. The resource titled "Water Quality for Agriculture, by Ayer, R.S., and Westcot, D.W. Food and Agriculture Organization (FAO) of the United Nations, Rome 1985, Revised 1989, 1994" contains a detailed discussion of how the SAR value is more indicative of potential infiltration issues if the specific conductance is taken into account. The infiltration properties of a soil are affected by the salinity of the water (as represented by specific conductance) and the sodium

content relative to the magnesium and calcium content as determined by the SAR. A high salinity water increases infiltration and a high SAR will decrease infiltration. These two factors may operate at the same time. The FAO publication indicates that an irrigation water that has a SAR between 12 and 20 and a specific conductance value of 4 mmho/cm (or 4000 umhos/cm) or less is a suitable irrigation water and requires no restriction.

The specific conductance of the Landfill's leachate since 2009 has ranged from 0.89 to 1.45. Based on the above discussion, the Landfill's leachate appears to be an acceptable irrigation water.

The County will continue to monitor the Primary and Secondary Spray Application Fields to measure the electrical conductance to ensure that the soils have an electrical conductance below 4 mmhos/cm. If the limit is exceeded, an assessment of the spray sites will be conducted to determine if any corrective action is necessary.

3.4.3 Metals Loading

The maximum allowable cumulative cadmium and heavy metal addition are specified in Minn. Rules, Chapter 7040.2900, Subparts 3 and 4 and in the MPCA's April 2011 Land Treatment of Landfill Leachate guidance document. These maximum cumulative addition limits are presented in **Table 3** in **Appendix B** of this report for the Secondary Spray Application Field. Calculations for the loading rates are shown on **Table 3.** Calculations assumed current cumulative heavy metals loadings calculated to date for the Secondary Spray Application Field based on its use as a biosolid disposal site.

These calculations indicate that even with the base line loadings from past biosolid applications, the minimum theoretical life of the Secondary Spray Application Field is greater than 300 years. These calculations indicate that the theoretical life of the land application areas is more than adequate to suit the future land application needs of the landfill. Refer to **Appendix G** for sample heavy metals loading calculations.

4.0 LEACHATE LAND APPLICATION SYSTEM OPERATIONS AND MAINTENANCE

Mr. Mike Appelwick with Northeast Technical Services, Inc. oversees operations of the leachate spray sites. Mr. Appelwick maintains Waste Water Treatment Facility Operator, Class A license (Certification Number A-4059; expires 9/11/13) and a Waste Disposal Facility Certificate – Type V (Certification Number 50-4059; expires 7/1/14). Maintenance of theses certifications is necessary for those charged with operating the leachate land application systems at all times.

Leachate will be applied primarily during daylight hours to maximize evaporation effects. Application of leachate is permitted by the MPCA from May through September, conditions permitting.

4.1 APPLICATION TECHNIQUES

Land application of treated landfill leachate will be conducted between the spring and fall. As mentioned previously, the layout of the current and proposed leachate spray sites is illustrated on **Figures 3** and **4** in **Appendix A** and in the Engineering Drawings.

The existing spray head application system is operated to maximize the land application volume of leachate and minimize the potential for applied leachate to infiltrate beyond the root depth of the reed canary grass cover. Effluent from the treatment ponds is pumped to the spray heads using the existing pump at a total flow rate of 250 gpm. The PLC station controls each zone by automatically opening and closing valves located in the blower building.

Leachate will be pumped from the leachate storage ponds via the pump located on top of the leachate manhole between the leachate storage/treatment ponds, through buried HDPE irrigation pipe to one of the leachate land application sites. Leachate will be applied to the spray sites using a fixed head irrigation system at a rate appropriate for each spray site, dependent upon calculated loading rates, parameter soil concentrations, soil moisture conditions, and climatic conditions.

Conditions will be maintained so the treated leachate can infiltrate into the soil and to allow the cover crop to deplete the liquid via transpiration. The soil is not allowed to become saturated, resulting in leachate run-off and/or depletion of the root zone oxygen supply.

The leachate land application areas are inspected during application events, as well as during scheduled quarterly inspections of the landfill. If erosion problems are detected, rutting or gullying will be repaired and areas of significant erosion reinforced with erosion-control devices such as silt fence and hay bales, if necessary.

During the last application event for each land application site, leachate will be drained from the laterals and forcemains.

4.2 POTENTIAL AIR EMISSIONS

As discussed in the MPCA's April 2011 Land Application of Landfill Leachate guidance document, volatile organic compounds not biologically reduced by pre-treatment may be volatilized either in the pretreatment process (aerated ponds) or at the spray sites. Potential air emissions due to leachate treatment and land application have been evaluated and compared to

the MPCA Division of Air Quality's proposed maximum allowable air emission limits at the property line. Assuming 100% removal efficiency and leachate water quality similar to that in the mid-range concentration of Minnesota Landfill leachate, none of the proposed air quality standards (emission rates) would be exceeded with the exception of vinyl chloride at the assumed hydraulic loading rates. However, historical testing data of the Landfill's untreated leachate indicates a maximum vinyl chloride concentration of 16 ug/l with the next highest detection being 3.3 ug/l. Refer to **Appendix D** for historical vinyl chloride detections of raw leachate. Emission rates calculated for a concentration of 16 ug/l are well below the MPCA's maximum allowable emission rates. Refer to **Appendix G** for predicted air emission rate calculations.

4.3 LEACHATE APPLICATION AREAS

Land application of leachate from the Landfill is permitted by the MPCA during the months of May through September, weather conditions permitting. Actual dates of application events will be determined on an on-going basis as dictated primarily by soil moisture content and climatic conditions.

The crop to be utilized for uptake purposes in the leachate application area will be a mixture of smooth brome grass, switch grass, birdfoot trefoil, reed canary, and perennial rye grass at initial planting. As with the Primary Spray Application Field, Reed canary grass is anticipated to become the dominant grass within the leachate spray radius. This seed mix has performed well over the past 18 years of Primary Spray Application Field operations. Leachate application will be scheduled to follow as soon after cuttings as possible to allow for a maximum water usage condition of the crop.

The application areas are inspected during application events, as well as during scheduled quarterly inspections of the Landfill. If erosion problems are detected, they will be repaired and areas of significant erosion will be reinforced with erosion-control devices such as silt fences and hay bales to prevent recurrence.

5.0 LEACHATE LAND APPLICATION SYSTEM MONITORING AND REPORTING

5.1 LEACHATE MANAGEMENT SYSTEM

The primary elements of leachate management and the proposed monitoring include the following tasks:

- Sampling from Phases 1, 2, 4 and 6 on an annual basis to determine raw leachate concentrations;
- Monitoring of the volumes of leachate land applied;

- Soil sampling of the land application area soils annually.
- Sampling of the leachate effluent prior to each land application.

In addition to the above elements that relate directly to leachate treatment and disposal, additional monitoring is completed to verify the physical integrity of the leachate storage facilities. This monitoring includes pond liner leak detection testing of lysimeters and observation of the overall leachate management system on a regular basis to verify it is operating within the permitted parameters.

5.1.1 Raw Leachate

A grab sample of leachate will be collected from stations 1, 2 and 4 once during the winter to document raw leachate quality (worst case) and help assess the treatment efficiency of the ponds. Parameters to be analyzed for are included in **Table 4** in **Appendix B**.

5.1.2 Leachate Storage Ponds

The leachate storage/treatment ponds have historically been operated in series mode. However, depending on the County's needs, the ponds could be operated in batch or parallel mode. The multiple treatment options give the Landfill some flexibility in the method used to treat leachate. It is anticipated that this will allow the Landfill to achieve the most efficient levels of leachate treatment possible prior to application to the land application area.

A leachate sample will be collected prior to each application event from the manhole between the leachate ponds. The results of this sample will be used to evaluate metals and nutrient loadings to the spray application sites on an annual basis. Parameters to be analyzed for are included in **Table 4 in Appendix B**.

5.1.3 Pond Liner Leak Detection

The leachate holding ponds were constructed with a double-liner system to enable secondary containment and leak detection in the event of a leak in the primary liner. The leak detection pipe is located between the primary liner and the secondary liner at the lowest elevation of the holding pond. A riser pipe is located along the sideslope of the pond.

Automatic pumps are currently installed in the lysimeters that pump accumulated liquid back to the ponds. During July through October, 2013, the pumps will be operated manually to allow an evaluation of the liner integrity. Water levels in each lysimeter and the volume per unit time will be recorded on the Leachate Pond Liner Evaluation Sheet in **Appendix H**.

If leaks are discovered during the liner evaluation or during any other regular maintenance activity, necessary repairs would be conducted as soon as reasonably possible. Any areas needing repairs will be made by the Landfill.

5.1.4 Leachate Management Reporting

Operations and maintenance records for the leachate management system will be maintained at the Landfill and submitted to the MPCA in accordance with the annual reporting requirements. In general, the Annual Operating Report will include the following:

- Description of the leachate treatment system including a description of expansions or modifications to the system.
- A summary of the volume of leachate collected, land applied and disposed of by other methods (if necessary).
- A summary of raw and pre-treated leachate quality.
- A summary of individual spray site soil loadings.
- Crop management.
- Groundwater monitoring results.
- Operational problems, if any.
- Contingency actions in regard to the leachate treatment system, if any.
- A summary of leachate management strategy.

5.2 LEACHATE LAND APPLICATION SYSTEM

5.2.1 Land Application Area Soil Sampling

Soils in each land application area are sampled on an annual basis prior to the first leachate application event of the leachate application season and the concentrations of metals and other parameters are reviewed to confirm nutrient loading rates.

One composite soil sample per 40 acres of each leachate land application site (two are collected from the CAS 1 site) consisting of 15-20 sub-samples is collected in accordance with the soil sampling guidelines provided in the MPCA's April 2011 Land Treatment of Landfill Leachate guidance document. Samples will be taken from the site at depths between 0 and 12 inches and will be submitted to a laboratory for analysis of percent organic matter, extractable phosphorous (lb/acre), exchangeable potassium (lb/acre), soil pH, and specific conductance cation exchange capacity (meq/100 g) or CEC, although CEC testing is required every three years. In addition, soil samples will be analyzed for the metals, major anions and major cations required in the MPCA's April 2011 Land Treatment of Landfill Leachate guidance document. Soil samples are

collected and analyzed each year to document the annual parameter concentrations in the land application area soils.

Parameters to be analyzed for are included in **Table 5** in **Appendix B**.

5.2.2 Leachate Monitoring for Land Application Events

Two samples of leachate are obtained during spray irrigation events. The first is collected in the manhole prior to the pump at the beginning of the irrigation event and consistent with historical sampling practices. The second is a composite prepared from leachate collected in three large, cleaned Rubbermaid® (or equivalent) containers placed on the ground within the irrigation radius of three sprinkler heads. As indicated above, samples are analyzed for the parameters listed in **Table 4** in **Appendix B**.

Accurate quantities of land-applied leachate and leachate constituent levels in the storage ponds are compiled for each application event by use of flow meters. The irrigation system is equipped with a flow meter to allow for the recording of discharge volumes. The flow meter also records cumulative flows from the leachate ponds.

5.2.2.1 PFCs

Perflourochemical Compounds (PFCs), specifically: perflourooctane acid (PFOA), perflourooctane sulfonate (PFOS), perflurorbutyric acid (PFBA) and perforlourobutane sulfonate (PFSB) are sampled in the spring and fall from the raw leachate as required in Section VI of the MPCA document *Land Treatment of Landfill Leachate (MPCA, 2011)*. In addition the spray irrigation field monitoring wells will also sampled in response to one or more of the leachate PFCs exceeding health risk limits (HRLs) of 0.3 ug/L for FPOA and PFOS or the health based value (HBV) of 7.0 ug/l for PFBA and PFBS.

The Landfill may also choose to limit the land application to one specific site and sample the ground water monitoring wells for that specific land application site.

5.3 Sample Handling, Preservation and Manifest

Monitoring for the leachate management system includes the collection of numerous soil and leachate samples using the documented sampling protocols. All samples collected shall be placed into the appropriate sample containers provided by the analytical laboratory completing all required analyses. Sample containers provided by a State approved laboratory shall include preservatives as appropriate for the required parameters.

Each sample container shall be labeled with the following: sample identifier, site name, name of sampler, date and time collected, analysis to be performed, and preservative. All sample

containers should be placed in an ice filled cooler upon collection for transmittal to the analytical laboratory. A Chain of Custody form should be filled out on-site and accompany the samples to the laboratory. Samples should be delivered to the analytical laboratory within forty-eight (48) hours of sample collection. Typically, sample delivery is accomplished within 36 hours or less.

6.0 TRAINING AND SAFETY PROCEDURES

6.1 TRAINING

Mr. Mike Appelwick is the designated operator of the leachate recirculation and land application systems. Mr. Appelwick has been involved with the development of the design and operations of the leachate management system existing at the Landfill since inception. Mr. Appelwick will be responsible for training other employees on the operations of the leachate recirculation and land application systems.

Training will be conducted for leachate recirculation and/or land application at the Landfill on an annual basis. Attendance of the training sessions will be mandatory for all employees charged with operations of any portions of the leachate management system.

Each training session will involve a discussion of system design, operations, monitoring and reporting requirements. An agenda identifying specific topics of discussion will be provided at the beginning of each meeting and used as a guide to the discussion. The following is a sample agenda of general discussion topics typical of a training session.

- Introduction – Summarize specific topics of discussion and purpose of training.
- System Design – Discuss general design and layout of the system. Highlight any changes to the system design since the last training session.
- System Operations - Discuss operations of the leachate recirculation and land application systems including dosing rates and volumes, leachate management system valving configurations, spray irrigation over the working face, operations of the center pivot system, application site observations and any necessary safety procedures.
- System Monitoring – Discuss system monitoring and procedures including volumes of leachate recirculated per cell, volume of leachate land applied, leachate sampling from cells, leachate sampling from application site, and odor monitoring.
- System Inspections – Discuss monthly inspection requirements and daily inspection requirements during irrigation.

- Reporting Requirements – Discuss frequency and content of reporting requirements for operations of the leachate management system.

- Problems and Corrective Actions – Discuss any operational problems encountered during the year and the actions taken to correct the problem. Discussion of the success of the corrective actions will be taken and a determination made as to whether or not the Contingency Action Plan will require updating.

6.2 SAFETY PROCEDURES

Leachate may contain constituents potentially harmful to human health and the environment. Certain safety procedures should be adhered to in order to maintain a safe working situation. Landfill personnel shall be provided with a range of values from the analytical results of leachate sampling to apprise them of the potential hazards of handling leachate.

Landfill personnel must maintain caution at all times when handling leachate. Caution should be exercised when leaning over the storage pond for the purpose of obtaining a sample. Entry to the tank or any valve manhole is unnecessary for sampling, valve manipulation or pump maintenance purposes. Should entering these structures be necessary, applicable enclosed space entry procedures will be followed.

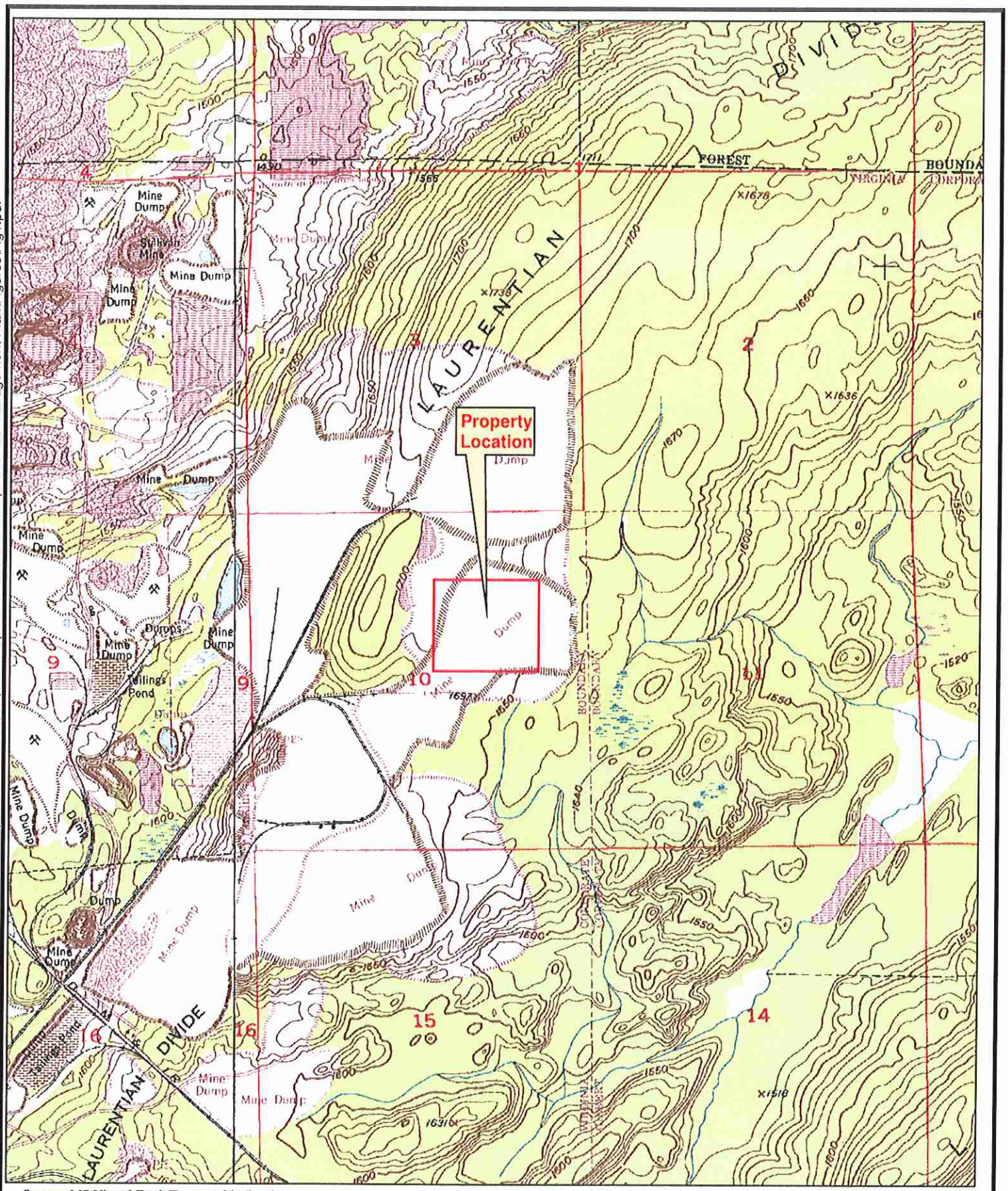

Source: MS Virtual Earth Topographic Quads
Projection: NAD83 UTM Zone 15N

0 2,000 4,000 Feet 1:24,000
1 Inch = 2,000 Feet

LIESCH
A Terracon COMPANY

SLC Leachate Management Plan	Jul 13
Landfill Location	Figure 1

W:\f\59092\GIS\Fig1.mxd N:\Projects\2013\SP137998\Working Files\DRAFTS (Proposal-Reports-Communications)\Leachate Management Plan\Figures\Fig1.pdf

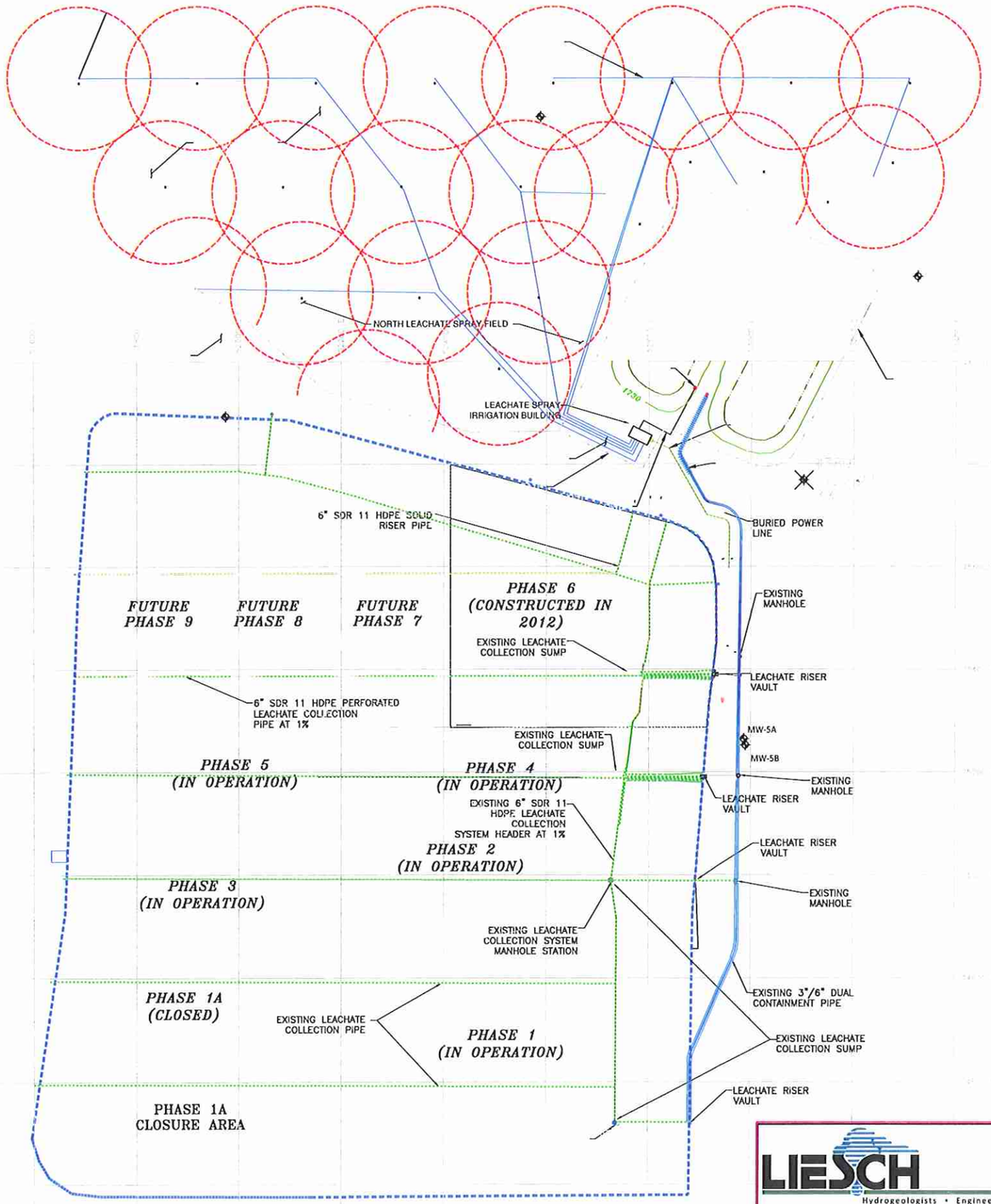

0 125 250

LEGEND

- 1700 — EXISTING CONTOUR
- EXISTING TREE LINE
- FENCE LINE
- SERVICE ROAD
- ASPHALT ROAD
- BUILDING/STRUCTURE
- MW-10 — MONITORING WELL
- 52036.2600 E, 74159.0900 N, ELEV. 1720.12 — PERMANENT CONTROL POINT

NOTES:

1. PROJECT COORDINATE GRID SHOWN.
2. ELEVATIONS ARE BASED ON PROJECT SPECIFIC DATUM (NOT U.S.G.S.)
3. BASE MAP DEVELOPED FROM NOVEMBER, 1994 AERIAL PHOTO, UPDATED WITH ANNUAL SURVEY AND MAPPING ALSO UPDATED WITH CONSTRUCTION DRAWINGS LAST SURVEY COMPLETED BY ST. LOUIS COUNTY ON NOVEMBER 15, 2011.

www.liesch.com

LIESCH
Hydrogeologists • Engineers • Environmental Scientists
Minneapolis • Los Angeles • Milwaukee • Phoenix

SLC Leachate Management Plan	Jun 13
2013 Application for RePermit Overall Leachate Management System Map	Figure 2

BAL 06-26-13 1=1 n:\liesch_projects\FL59124\cad\2013 repermit\lmp figures\figure 2

www.liesch.com

LIESCH

Hydrogeologists • Engineers • Environmental Scientists

Minneapolis • Los Angeles • Milwaukee • Phoenix

SLC Leachate Management Plan	Jun 13
2013 Application for RePermit Existing Primary Spray Field Irrigation Field Laoyout	Figure 3

BAL 06-27-13 1=1 n:\liesch_projects\VR\59124\cad\2013 repermit\rmp figures\figure 3

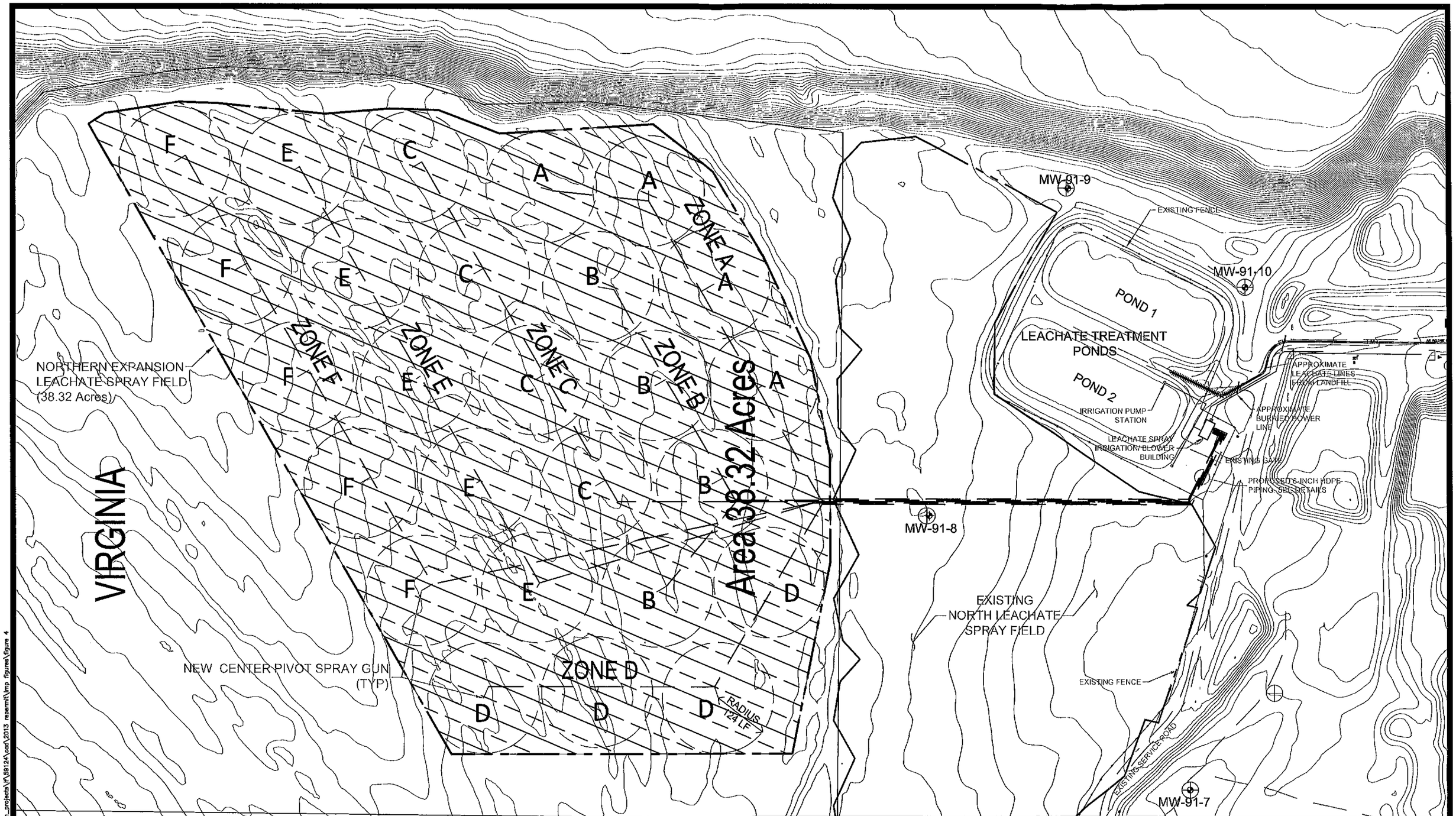

www.liesch.com

LIESCH

Hydrogeologists • Engineers • Environmental Scientists

Minneapolis • Los Angeles • Milwaukee • Phoenix

SLC Leachate Management Plan	Jun 13
2013 Application for RePermit Proposed Secondary Spray Field Layout	Figure 4

BAL 06-27-13 1=1 n:\liesch_projects\VA\59124\cad\2013 repermit\lmp figures\figure 4

APPENDIX B

Table 1. Actual Annual Leachate Volumes Applied

Year	Development Scenario (Phase)	Actual Leachate Applied (Gallons)
1994	1	1,280,000
1995	1/1A	3,520,000
1996	1/1A	3,860,000
1997	1/1A	3,970,000
1998	1/1A	4,450,000
1999	1/1A/2	3,160,000
2000	1/2/1A C	5,770,000
2001	1/2/1A C	6,740,000
2002	1/2/3/1A C	4,080,000
2003	1/2/3/1A C	4,320,000
2004	1/2/3/4/1A C	3,150,000
2005	1/2/3/4/1A C	6,030,000
2006	1/2/3/4/1A C	3,380,000
2007	1/2/3/4/1A C	2,760,000
2008	1/2/3/4/1A C	3,880,000
2009	1/2/3/4/5/1A C	5,252,000
2010	1/2/3/4/5/1A C	5,205,000
2011	1/2/3/4/5/1A C	3,989,000
2012	1/2/3/4/5/1A C	5,748,000
Total		80,544,000

Table 2. Leachate Volumes Applied and Predicted (2000-2012)

Year	Development Scenario (Phase)	Actual Leachate Applied (Gallons)	Predicted Leachate Applied* (Gallons)
2000	1/2/1A C	5,770,000	3,376,587
2001	1/2/1A C	6,740,000	3,376,587
2002	1/2/3/1A C	4,080,000	4,302,338
2003	1/2/3/1A C	4,320,000	4,302,338
2004	1/2/3/4/1A C	3,150,000	5,232,202
2005	1/2/3/4/1A C	6,030,000	5,232,202
2006	1/2/3/4/1A C	3,380,000	5,232,202
2007	1/2/3/4/1A C	2,760,000	5,232,202
2008	1/2/3/4/1A C	3,880,000	5,232,202
2009	1/2/3/4/5/1A C	5,252,000	6,162,066
2010	1/2/3/4/5/1A C	5,205,000	6,162,066
2011	1/2/3/4/5/1A C	3,989,000	6,162,066
2012**	1/2/3/4/5/1A C	5,748,000	6,162,066
Total***		60,304,000	66,167,124

* Based on 2013 HELP Model Runs for Phases 1 - 5. Using 90% Average Annual + 10% Peak Daily.

**No waste has been placed in Phase 6 so no leachate volume was calculated.

Table 3
St. Louis County Landfill
Cumulative Effect of Leachate Land Application

Table 3 Heavy Metals Loading Rates

Metal of Concern	Maximum Addition* lb/ac	Typical Concentration** mg/L	Observed Concentration*** mg/L	Annual Loading lb/acre/yr	Cumulative Loading lb/acre *****	Site Life North Years
Cadmium	35	0.008-0.07	0.00094	0.001	0.678	34332
Lead	268	0.3-1.4	0.002	0.011	12.899	23191
Zinc	2500	4.0-18	0.08	0.105	79.786	23050
Copper	1339	0.03-0.14	0.012	0.016	69.991	79313
Nickel****	375	0.1-0.2	0.2	0.263	3.069	1414
Arsenic	37	0.5-1.7	0.011	0.015	0.360	2443
Mercury	15	0.0007-0.002	0.0002	0.0003	0.076	49750
Selenium****	89	0.1-0.2	0.2	0.263	0.184	337

Notes:
* Maximum Cumulative Heavy Metal Addition (5 meq/100grams) from MN Rules 7041.1100 Subp. 4B. Cumulative Loading Rates
** Typical Concentration of these metals from Appendix C of *Land Treatment of Landfill Leachate*, April 2011
*** Observed concentration based on the concentration seen in the treatment ponds at the Landfill, based on sampling (in 2012).
**** Nickel and Selenium based on LTLL Guidance
***** Cumulative addition based on total loading to date per 2012 Annual Report for City of Virginia biosolids site.

TABLE 4
St. Louis County Landfill
Leachate Management System
Raw and Pre-Treated Effluent Parameters Required for Analysis

Field Parameters
Appearance
Temperature
Specific Conductance
pH
Eh
Alkalinity

Metals
Arsenic
Barium
Cadmium
Chromium
Cobalt
Copper
Lead
Mercury
Molybdenum
Nickel
Selenium
Silver
Zinc

Major Anions
Bicarbonate
Bromide
Carbonate
Chloride
Nitrate Nitrogen
Nitrite Nitrogen
Sulfate

Major Cations
Boron
Calcium
Magnesium
Potassium
Sodium
Iron
Manganese
Ammonia Nitrogen

Other Parameters
Total Suspended Solids
Total Dissolved Solids
B.O.D.
C.O.D.
Cyanide
TKN
Total Coliform Bacteria
Total Phosphorus
PFCs – (PFOS, PFOA, PFBA & PFBS)

Organic Compounds
Use MDH 465D List

Table 5 - Land Application Site Soil Sampling Parameters

	Units	Timing
USDA textural classification		Annual
Percent organic matter	%	Annual
Extractable phosphorus	lbs/acre	Annual
Exchangeable potassium	lbs/acre	Annual
pH	(s.u.)	Annual
CEC		Annual
Specific conductance	(µhos/ cm)	Annual
Metals		Annual
Arsenic	mg/kg	Annual
Boron	mg/kg	Annual
Cadmium	mg/kg	Annual
Copper	mg/kg	Annual
Lead	mg/kg	Annual
Nickel	mg/kg	Annual
Selenium	mg/kg	Annual
Zinc	mg/kg	Annual
SAR calculation		Annual
EC meter	(µhos/ cm)	Monthly

Each land app site will have composited soil samples for every 40 acres.

APPENDIX C

STATE OF MINNESOTA

Minnesota Pollution Control Agency

Municipal Division

National Pollutant Discharge Elimination System (NPDES)/
State Disposal System (SDS) Permit MN0049786

PERMITTEE:	Western Lake Superior Sanitary District (WLSSD)
FACILITY NAME:	WLSSD Wastewater Treatment Plant
RECEIVING WATER:	St. Louis Bay (Class 2B,3B,4A,4B,5,6 water)

CITY OR TOWNSHIP:	Duluth	**COUNTY:**	St. Louis
ISSUANCE DATE:	March 22, 2007	**EXPIRATION DATE:**	February 29, 2012
MODIFICATION DATE:	June 1, 2009		

The state of Minnesota, on behalf of its citizens through the Minnesota Pollution Control Agency (MPCA), authorizes the Permittee to operate a disposal system at the facility named above and to discharge from this facility to the receiving water named above, in accordance with the requirements of this permit.

The goal of this permit is to protect water quality in accordance with Minnesota and US statutes and rules, including Minn. Stat. chs. 115 and 116, Minn. R. chs. 7001, 7041, 7050, 7053, 7060, and the US Clean Water Act.

This permit is effective on the issuance date identified above, as modified on June 1, 2009. This permit expires at midnight on the expiration date identified above.

Signature: _____

Paul C. Scheirer, Supervisor
Northeast Regional Office
Municipal Division

for The Minnesota Pollution Control Agency

Submit DMRs to:
Attention: Discharge Monitoring Reports
Minnesota Pollution Control Agency
520 Lafayette Rd N
St Paul, MN 55155-4194

Submit Other WQ Reports to:
Attention: WQ Submittals Center
Minnesota Pollution Control Agency
520 Lafayette Rd N
St Paul, MN 55155-4194

Questions on this permit?

- For DMR and other permit reporting issues, contact: Tamara Dahl, 507-476-4252.
- For specific permit requirements or permit compliance status, contact: Jaramie Logelin, 218-302-6640.
- General permit or NPDES program questions, contact: MPCA, 651-282-6143 or 1-800-657-3938.

Table of Contents

Permitted Facility Description	3-4
Topographic Map of Permitted Facility	5
Wastewater Schematic Diagram	6
Location of Off-Site Biosolids Storage Facility	7
Summary of Stations and Station Locations	8
Limits and Monitoring Requirements	9-14
Chapter 1. Compliance Schedule	15
Evaluate Sewage Effluent Disinfection Practices	
Construction – Multi-Media Filter Refurbish Project	
Chapter 2: Special Requirements	15-16
Disinfection Requirements at SD-001	
Disinfection Requirements at Surface Water Stations	
Pesticide Monitoring	
Large Volume/Concentration Sample Plan	
Pollutant Minimization Plan	
Chapter 3: Mercury Management Plan (Lake Superior Basin)	16-17
Chapter 4: Total Residual Oxidants (Chlorine, Bromine)	18
Chapter 5: Facility Specific Definitions	18
Chapter 6: Surface Water Stations	19
Requirements for Specific Stations	
Special Requirements	
Discharge Monitoring Reports	
Sampling Location	
Winter Sampling Conditions	
Chapter 7: Surface Discharge Stations	19-22
Requirements for Specific Stations	
Sampling Location	
Surface Discharges	
Winter Sampling Conditions	
Chronic Toxicity Testing	
Positive Toxicity Result for WET	
Chronic Toxicity Testing – Species & Procedural Requirements	
Chronic Toxicity Testing – Quality Control & Report Submittals	
Priority Pollutants – Monitoring Requirements	
Discharge Monitoring Reports	
Reporting Requirements	
Chapter 8: Waste Stream Stations	22
Requirements for Specific Stations	
Sampling Location	
Chapter 9: Domestic Wastewater – Mechanical System	22-23
Bypass Structures	
Sanitary Sewer Extension Permit	
Operator Certification	
Chapter 10: Biosolids Land Application	23-27
Chapter 11: Pretreatment	27-32
Chapter 12: Total Facility Requirements	32-40

Facility Description

The Western Lake Superior Sanitary District (WLSSD) Wastewater Treatment Plant (Facility) is located at E 1/4 of NW 1/4 of Section 4, Township 49 North, Range 14 West, Duluth, St. Louis County, Minnesota. This is a Class A facility.

Major components of the Facility include:
1 Collection system with gravity and/or Pressure Sewer
2 Bar Screens - mechanical
2 Grit Removal Tanks
4 Activated Sludge Tanks- pure oxygen
4 Secondary Clarifiers
4 Flocculation Tanks
12 Mixed Media Filters – anthracite/silica/gravel with backwash
2 Chlorination Tanks
1 Dechlorination Tank
4 Dissolved Air Flotation Systems
1 Anaerobic Digester - complete mixed, heated - thermophilic
3 Anaerobic Digesters - complete mixed, heated - mesophilic
2 Sludge Storage Tanks
2 Centrifuges
1 Off-Site Biosolids Storage Facility
1 Land Application

The Facility has a continuous discharge (SD-001) to the St. Louis Bay (a Class 2B, 3B, 4A, 4B, 5, 6 receiving water). The Facility is designed to treat an average wet weather design flow of 48.4 million gallons per day (MGD) with a 5-day carbonaceous biological oxygen demand ($CBOD_5$) of 300 milligrams per liter (mg/L).

WLSSD is the operator an off-site biosolids storage facility located on Highway 210, approximately one mile west of Interstate 35, in the NE¼ Sec. 9, T48N, R17W. The address is 1948 Highway 210, Carlton, Carlton County, Minnesota.

The wastewater treatment plant site only has on-site biosolids cake storage for approximately 19-22 days. WLSSD built an off-site storage facility to operate in conjunction with the land application program for those instances when weather or site conditions preclude access for land application activities and more space is needed than is available at the wastewater treatment plant site. Biosolids are land applied by WLSSD on approved sites. Land application sites consists of farmland primarily located in Carlton and St. Louis counties.

The off-site biosolids storage facility is sized to accommodate stabilized biosolids. Tractor-trailer combinations of 80,000 GVW will haul biosolids to and from the facility. The structure is fully enclosed and is covered with a metal roof to the top of the concrete containment walls. Ventilation fans will provide ventilation for the storage facility. A trench drain system collects liquid released from stored biosolids. The capacity of the off-site facility is based on the following: 41 days of storage based on the year 2020 maximum month production of anaerobically digested biosolids (29 dry tons per day) at 25 percent total solids and 0.85 ton per cubic yard cake density.

This permit includes a compliance schedule requiring additional mercury monitoring and treatment investigation and interim effluent mercury limits. At the end of the compliance schedule, the Permittee must attain final mercury limits.

The off-site biosolids storage facility was previously permitted as SDS Permit MN0064653 and is now incorporated into this wastewater treatment plant NPDES/SDS Permit.

This permit includes a compliance schedule requiring treatment investigation for disinfection options. At the end of the compliance schedule, the Permittee must attain final fecal coliform effluent limits.

The January 1, 1988, calculated design average wet weather flow for this facility has been estimated to be 48.4 mgd. In accordance with MPCA rules regarding nondegradation for all waters, the design average wet weather flow of the facility as of January 1, 1988, and associated mass loading are the baseline design flow and mass loading. This baseline flow and mass loading will be used to determine whether nondegradation review is required for any change in the discharge. Any change that results in an increase in design flow greater than 0.2 mgd and an increased loading of one or more pollutants, or any change in a discharge containing a toxic pollutant that results in a mass loading rate likely to increase the concentration of the toxicant in the receiving water by greater than one percent over the baseline quality, is subject to nondegradation review in accordance with Minn. R. 7050.0185.

Location of Permitted Facility

Topographic Map of Permitted Facility
MN0049786 - Western Lake Superior Sanitary District
T49N, R14W, Section 4
Duluth, St. Louis County, Minnesota

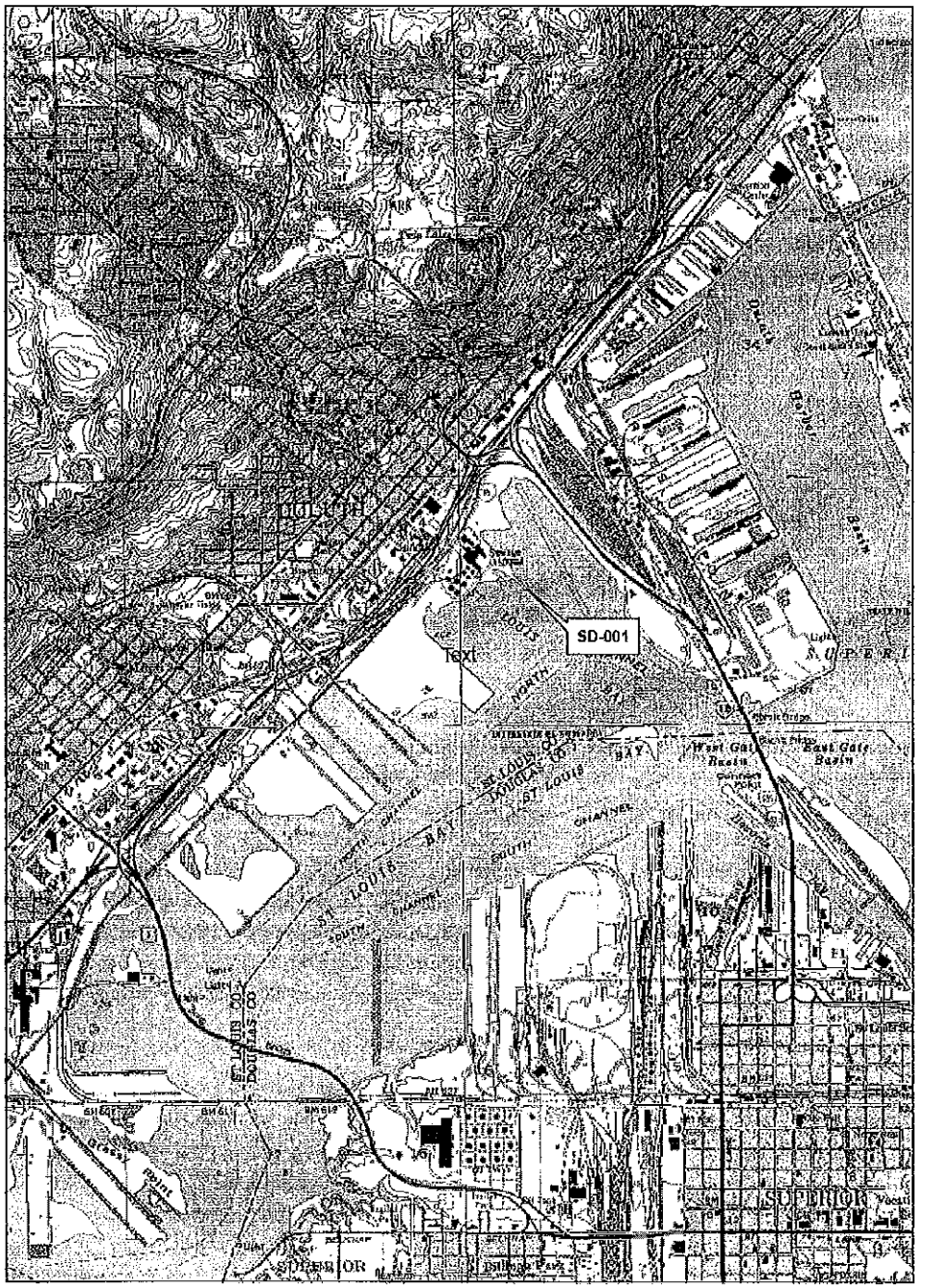

Map produced by MPCA Staff 1/18/07
Source: Duluth, Duluth Heights, Superior and West Duluth Quads
Scale: 1:24,000

Wastewater Schematic Diagram

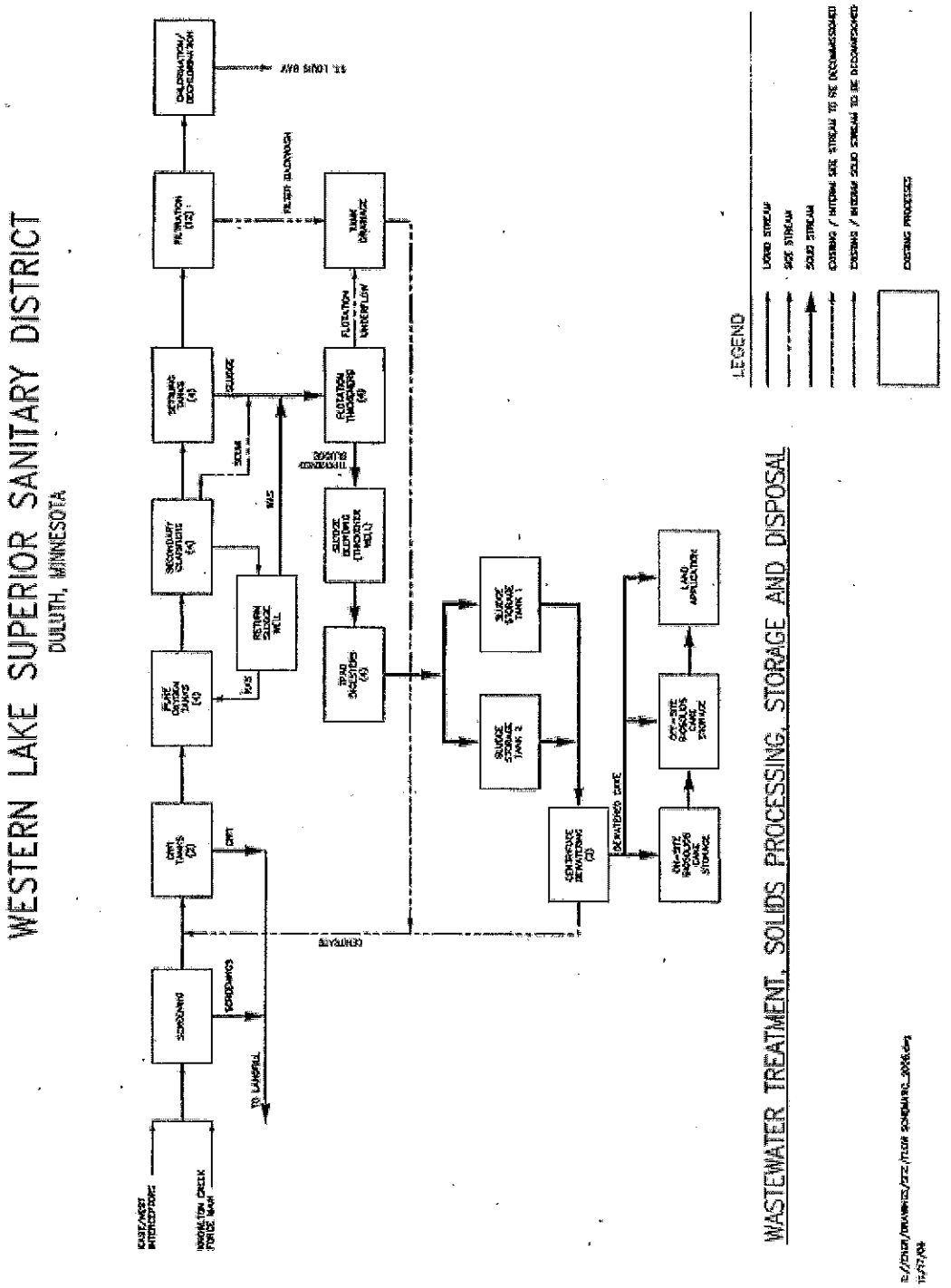

Location of Off-Site Biosolids Storage Facility

MN0049786, WLSSD Off-Site Biosolids Storage Facility
T48N, R17W, Section 9
Carlton, Carlton County, Minnesota

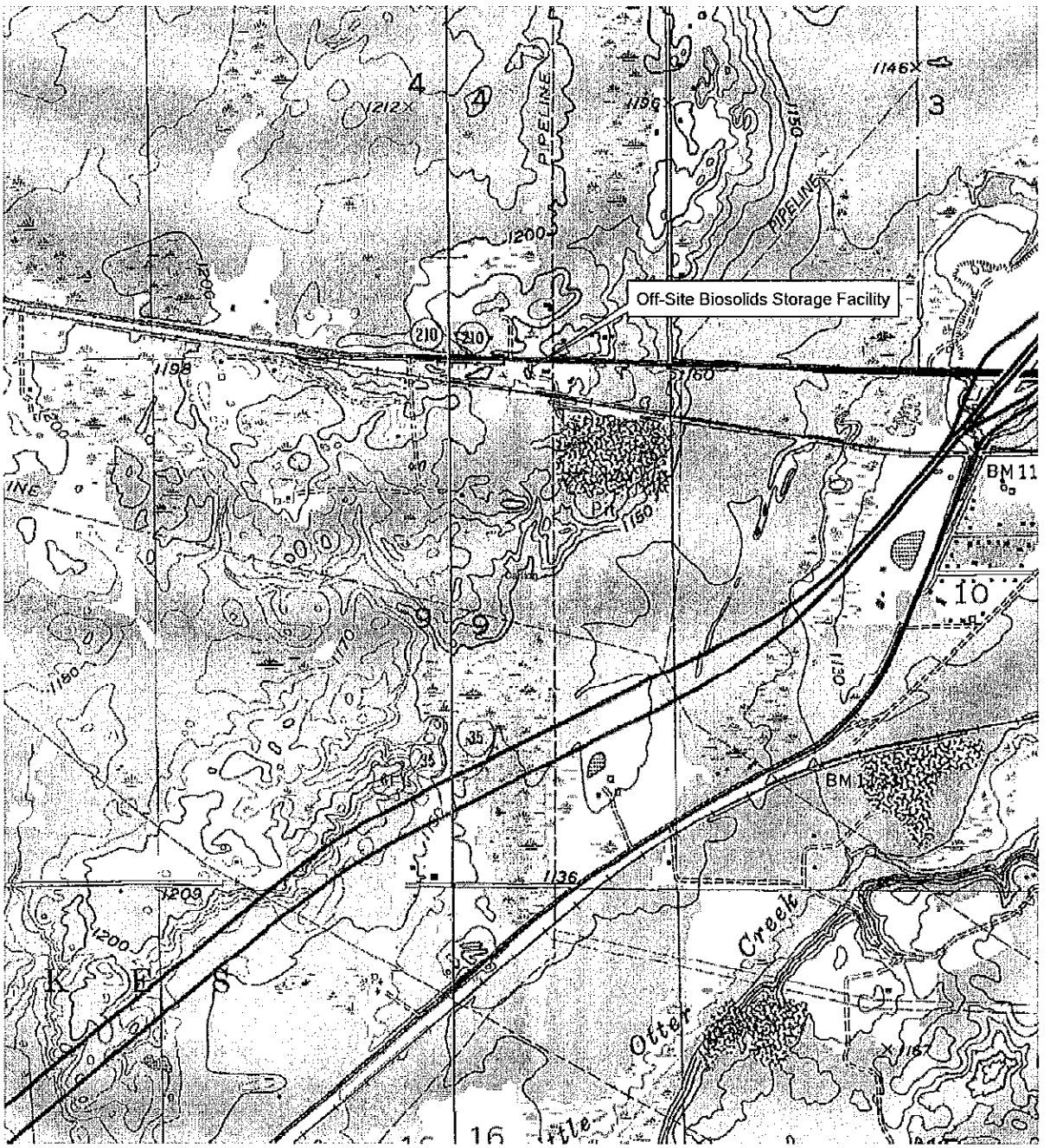

Map producted by: MPCA Staff, 4/15/09
Scale: 1:15,000

0 0.125 0.25 0.5 Miles

N

The Permittee shall comply with the limits and monitoring requirements as specified below.

Period: Limits Applicable in the Interim Period

SD 001: 001 Main Facility Discharge

Parameter	Limit	Units	Limit Type	Effective Period	Sample Type	Frequency	Notes
2,3,7,8,-Tetrachlorodibenzofuran	6.1	pg/L	Daily Maximum	Jan-Dec	5-Day Composite	1 x Quarter	8
2,3,7,8-Tetrachlorodibenzo-p-dioxin (TCDD)	0.087	pg/L	Daily Maximum	Jan-Dec	5-Day Composite	1 x Quarter	8
BOD, Carbonaceous 05 Day (20 Deg C)	4574	kg/day	Calendar Month Average	Jan-Dec	24-Hour Flow Composite	3 x Week	2
BOD, Carbonaceous 05 Day (20 Deg C)	25	mg/L	Calendar Month Average	Jan-Dec	24-Hour Flow Composite	3 x Week	
BOD, Carbonaceous 05 Day (20 Deg C)	8538	kg/day	Maximum Calendar Week Average	Jan-Dec	24-Hour Flow Composite	3 x Week	3
BOD, Carbonaceous 05 Day (20 Deg C)	40	mg/L	Maximum Calendar Week Average	Jan-Dec	24-Hour Flow Composite	3 x Week	
BOD, Carbonaceous 05 Day (20 Deg C) Percent Removal	85	%	Minimum Calendar Month Average	Jan-Dec	Calculation	3 x Week	
Chlorine, Total Residual	0.038	mg/L	Daily Maximum	Jan-Dec	Grab	1 x Day	15
Chloroform	Monitor Only	ug/L	Calendar Quarter Maximum	Jan-Dec	Grab	1 x Quarter	11
Copper, Total (as Cu)	Monitor Only	ug/L	Calendar Quarter Maximum	Jan-Dec	24-Hour Flow Composite	1 x Quarter	9
DDT (p,p'-Dichlorodiphenyltrichloroethane)	Monitor Only	ug/L	Calendar Quarter Maximum	Jan-Dec	5-Day Composite	1 x Quarter	12
Dieldrin	Monitor Only	ug/L	Calendar Quarter Maximum	Jan-Dec	5-Day Composite	1 x Quarter	12
Escherichia coli	Monitor Only	#100ml	Calendar Month Geometric Mean	Jan-Dec	Grab	3 x Week	6
Fecal Coliform, MPN or Membrane Filter 44.5C	Monitor Only	#100ml	Calendar Month Geometric Mean	Apr-Oct	Grab	3 x Week	4
Lead, Total (as Pb)	Monitor Only	ug/L	Calendar Quarter Maximum	Jan-Dec	24-Hour Flow Composite	1 x Quarter	10
Mercury, Total (as Hg)	1464	mg/day	Calendar Month Average	Jan-Dec	Grab	2 x Month	7
Mercury, Total (as Hg)	8	ng/L	Calendar Month Average	Jan-Dec	Grab	2 x Month	7
Mercury, Total (as Hg)	2561	mg/day	Daily Maximum	Jan-Dec	Grab	2 x Month	7
Mercury, Total (as Hg)	14	ng/L	Daily Maximum	Jan-Dec	Grab	2 x Month	7
Oxygen, Dissolved	Monitor Only	mg/L	Calendar Month Minimum	Jan-Dec	Grab	1 x Day	1
PCBs (Polychlorinated biphenyls)	0.2	ug/L	Daily Maximum	Jan-Dec	5-Day Composite	1 x Quarter	12
pH	9.0	SU	Calendar Month Maximum	Jan-Dec	Grab	1 x Day	1
pH	6.0	SU	Calendar Month Minimum	Jan-Dec	Grab	1 x Day	1
Phosphorus, Total (as P)	182	kg/day	Calendar Month Average	Jan-Dec	24-Hour Flow Composite	1 x Week	2
Phosphorus, Total (as P)	1.0	mg/L	Calendar Month Average	Jan-Dec	24-Hour Flow Composite	1 x Week	
Solids, Total Suspended (TSS)	5489	kg/day	Calendar Month Average	Jan-Dec	24-Hour Flow Composite	3 x Week	2
Solids, Total Suspended (TSS)	30	mg/L	Calendar Month Average	Jan-Dec	24-Hour Flow Composite	3 x Week	
Solids, Total Suspended (TSS)	9605	kg/day	Maximum Calendar Week Average	Jan-Dec	24-Hour Flow Composite	3 x Week	3

The Permittee shall comply with the limits and monitoring requirements as specified below.

Period: ***Limits Applicable in the Interim Period***

SD 001: 001 Main Facility Discharge

Parameter	Limit	Units	Limit Type	Effective Period	Sample Type	Frequency	Notes
Solids, Total Suspended (TSS)	45	mg/L	Maximum Calendar Week Average	Jan-Dec	24-Hour Flow Composite	3 x Week	
Solids, Total Suspended (TSS) Percent Removal	85	%	Minimum Calendar Month Average	Jan-Dec	Calculation	3 x Week	
Temperature, Water (C)	Monitor Only	Deg C	Calendar Month Maximum	Jan-Dec	Measurement, Continuous	1 x Day	
Temperature, Water (C)	Monitor Only	Deg C	Calendar Month Minimum	Jan-Dec	Measurement, Continuous	1 x Day	
Toxaphene	Monitor Only	ug/L	Daily Maximum	Jan-Dec	5-Day Composite	1 x Quarter	12

SW 002: Duluth Water Intake

Parameter	Limit	Units	Limit Type	Effective Period	Sample Type	Frequency	Notes
Fecal Coliform, MPN or Membrane Filter 44.5C	100	#100ml	Instantaneous Maximum Intervention	Nov-Mar	Grab	1 x Day	5

SW 003: Cloquet Water Intake

Parameter	Limit	Units	Limit Type	Effective Period	Sample Type	Frequency	Notes
Fecal Coliform, MPN or Membrane Filter 44.5C	100	#100ml	Instantaneous Maximum Intervention	Nov-Mar	Grab	1 x Day	5

SW 004: Superior Water Intake

Parameter	Limit	Units	Limit Type	Effective Period	Sample Type	Frequency	Notes
Fecal Coliform, MPN or Membrane Filter 44.5C	100	#100ml	Instantaneous Maximum Intervention	Nov-Mar	Grab	1 x Day	5

WS 001: Influent waste stream

Parameter	Limit	Units	Limit Type	Effective Period	Sample Type	Frequency	Notes
BOD, Carbonaceous 05 Day (20 Deg C)	Monitor Only	mg/L	Calendar Month Average	Jan-Dec	24-Hour Flow Composite	3 x Week	
BOD, Carbonaceous 05 Day (20 Deg C)	Monitor Only	mg/L	Calendar Month Maximum	Jan-Dec	24-Hour Flow Composite	3 x Week	
Flow	Monitor Only	mgd	Calendar Month Average	Jan-Dec	Measurement, Continuous	1 x Day	
Flow	Monitor Only	mgd	Calendar Month Maximum	Jan-Dec	Measurement, Continuous	1 x Day	
Flow	Monitor Only	MG	Calendar Month Total	Jan-Dec	Measurement, Continuous	1 x Day	
Mercury, Total (as Hg)	Monitor Only	ng/L	Single Value	Jan, Mar, May, Jul, Sep, Nov	Grab	1 x Month	7
pH	Monitor Only	SU	Calendar Month Maximum	Jan-Dec	Grab	1 x Day	1
pH	Monitor Only	SU	Calendar Month Minimum	Jan-Dec	Grab	1 x Day	1
Phosphorus, Total (as P)	Monitor Only	mg/L	Calendar Month Average	Jan-Dec	24-Hour Flow Composite	1 x Week	

The Permittee shall comply with the limits and monitoring requirements as specified below.

Period: Limits Applicable in the Interim Period

WS 001: Influent waste stream

Parameter	Limit	Units	Limit Type	Effective Period	Sample Type	Frequency	Notes
Precipitation	Monitor Only	in	Calendar Month Total	Jan-Dec	Measurement	1 x Day	
Solids, Total Suspended (TSS)	Monitor Only	mg/L	Calendar Month Average	Jan-Dec	24-Hour Flow Composite	3 x Week	
Solids, Total Suspended (TSS)	Monitor Only	mg/L	Calendar Month Maximum	Jan-Dec	24-Hour Flow Composite	3 x Week	
Temperature, Water (C)	Monitor Only	Deg C	Calendar Month Maximum	Jan-Dec	Measurement, Continuous	1 x Day	
Temperature, Water (C)	Monitor Only	Deg C	Calendar Month Minimum	Jan-Dec	Measurement, Continuous	1 x Day	

Period: Limits Applicable in the Final Period

SD 001: 001 Main Facility Discharge

Parameter	Limit	Units	Limit Type	Effective Period	Sample Type	Frequency	Notes
2,3,7,8-Tetrachlorodibenzo-p-dioxin (TCDD)-TECs	0.0043	pg/L	Calendar Quarter Average	Jan-Dec	5-Day Composite	1 x Quarter	14
2,3,7,8-Tetrachlorodibenzo-p-dioxin (TCDD)-TECs	0.0075	pg/L	Daily Maximum	Jan-Dec	5-Day Composite	1 x Quarter	14
BOD, Carbonaceous 05 Day (20 Deg C)	4574	kg/day	Calendar Month Average	Jan-Dec	24-Hour Flow Composite	3 x Week	2
BOD, Carbonaceous 05 Day (20 Deg C)	25	mg/L	Calendar Month Average	Jan-Dec	24-Hour Flow Composite	3 x Week	
BOD, Carbonaceous 05 Day (20 Deg C)	8538	kg/day	Maximum Calendar Week Average	Jan-Dec	24-Hour Flow Composite	3 x Week	3
BOD, Carbonaceous 05 Day (20 Deg C)	40	mg/L	Maximum Calendar Week Average	Jan-Dec	24-Hour Flow Composite	3 x Week	
BOD, Carbonaceous 05 Day (20 Deg C) Percent Removal	85	%	Minimum Calendar Month Average	Jan-Dec	Calculation	3 x Week	
Chlorine, Total Residual	0.038	mg/L	Daily Maximum	Jan-Dec	Grab	1 x Day	15
Chloroform	Monitor Only	ug/L	Calendar Quarter Maximum	Jan-Dec	Grab	1 x Quarter	11
Copper, Total (as Cu)	Monitor Only	ug/L	Calendar Quarter Maximum	Jan-Dec	24-Hour Flow Composite	1 x Quarter	9
DDT (p,p'-Dichlorodiphenyltrichloroethane)	Monitor Only	ug/L	Calendar Quarter Maximum	Jan-Dec	5-Day Composite	1 x Quarter	12
Dieldrin	Monitor Only	ug/L	Calendar Quarter Maximum	Jan-Dec	5-Day Composite	1 x Quarter	12
Escherichia coli	Monitor Only	#100ml	Calendar Month Geometric Mean	Jan-Dec	Grab	3 x Week	6
Fecal Coliform, MPN or Membrane Filter 44.5C	200	#100ml	Calendar Month Geometric Mean	Apr-Oct	Grab	3 x Week	13
Lead, Total (as Pb)	Monitor Only	ug/L	Calendar Quarter Maximum	Jan-Dec	24-Hour Flow Composite	1 x Quarter	10
Mercury, Total (as Hg)	329	mg/day	Calendar Month Average	Jan-Dec	Grab	2 x Month	7
Mercury, Total (as Hg)	1.8	ng/L	Calendar Month Average	Jan-Dec	Grab	2 x Month	7
Mercury, Total (as Hg)	585	mg/day	Daily Maximum	Jan-Dec	Grab	2 x Month	7
Mercury, Total (as Hg)	3.2	ng/L	Daily Maximum	Jan-Dec	Grab	2 x Month	7

The Permittee shall comply with the limits and monitoring requirements as specified below.

Period: Limits Applicable in the Final Period

SD 001: 001 Main Facility Discharge

Parameter	Limit	Units	Limit Type	Effective Period	Sample Type	Frequency	Notes
Oxygen, Dissolved	Monitor Only	mg/L	Calendar Month Minimum	Jan-Dec	Grab	1 x Day	1
PCBs (Polychlorinated biphenyls)	0.035	ng/L	Calendar Month Average	Jan-Dec	5-Day Composite	1 x Month	12
PCBs (Polychlorinated biphenyls)	0.061	ng/L	Daily Maximum	Jan-Dec	5-Day Composite	1 x Month	12
pH	9.0	SU	Calendar Month Maximum	Jan-Dec	Grab	1 x Day	1
pH	6.0	SU	Calendar Month Minimum	Jan-Dec	Grab	1 x Day	1
Phosphorus, Total (as P)	182	kg/day	Calendar Month Average	Jan-Dec	24-Hour Flow Composite	1 x Week	2
Phosphorus, Total (as P)	1.0	mg/L	Calendar Month Average	Jan-Dec	24-Hour Flow Composite	1 x Week	
Solids, Total Suspended (TSS)	5489	kg/day	Calendar Month Average	Jan-Dec	24-Hour Flow Composite	3 x Week	2
Solids, Total Suspended (TSS)	30	mg/L	Calendar Month Average	Jan-Dec	24-Hour Flow Composite	3 x Week	
Solids, Total Suspended (TSS)	9605	kg/day	Maximum Calendar Week Average	Jan-Dec	24-Hour Flow Composite	3 x Week	3
Solids, Total Suspended (TSS)	45	mg/L	Maximum Calendar Week Average	Jan-Dec	24-Hour Flow Composite	3 x Week	
Solids, Total Suspended (TSS) Percent Removal	85	%	Minimum Calendar Month Average	Jan-Dec	Calculation	3 x Week	
Temperature, Water (C)	Monitor Only	Deg C	Calendar Month Maximum	Jan-Dec	Measurement, Continuous	1 x Day	
Temperature, Water (C)	Monitor Only	Deg C	Calendar Month Minimum	Jan-Dec	Measurement, Continuous	1 x Day	
Toxaphene	Monitor Only	ug/L	Daily Maximum	Jan-Dec	5-Day Composite	1 x Quarter	12

SW 002: Duluth Water Intake

Parameter	Limit	Units	Limit Type	Effective Period	Sample Type	Frequency	Notes
Fecal Coliform, MPN or Membrane Filter 44.5C	100	#100ml	Instantaneous Maximum Intervention	Nov-Mar	Grab	1 x Day	5

SW 003: Cloquet Water Intake

Parameter	Limit	Units	Limit Type	Effective Period	Sample Type	Frequency	Notes
Fecal Coliform, MPN or Membrane Filter 44.5C	100	#100ml	Instantaneous Maximum Intervention	Nov-Mar	Grab	1 x Day	5

SW 004: Superior Water Intake

Parameter	Limit	Units	Limit Type	Effective Period	Sample Type	Frequency	Notes
Fecal Coliform, MPN or Membrane Filter 44.5C	100	#100ml	Instantaneous Maximum Intervention	Nov-Mar	Grab	1 x Day	5

The Permittee shall comply with the limits and monitoring requirements as specified below.

Period: ***Limits Applicable in the Final Period***

WS 001: Influent waste stream

Parameter	Limit	Units	Limit Type	Effective Period	Sample Type	Frequency	Notes
BOD, Carbonaceous 05 Day (20 Deg C)	Monitor Only	mg/L	Calendar Month Average	Jan-Dec	24-Hour Flow Composite	3 x Week	
BOD, Carbonaceous 05 Day (20 Deg C)	Monitor Only	mg/L	Calendar Month Maximum	Jan-Dec	24-Hour Flow Composite	3 x Week	
Flow	Monitor Only	mgd	Calendar Month Average	Jan-Dec	Measurement, Continuous	1 x Day	
Flow	Monitor Only	mgd	Calendar Month Maximum	Jan-Dec	Measurement, Continuous	1 x Day	
Flow	Monitor Only	MG	Calendar Month Total	Jan-Dec	Measurement, Continuous	1 x Day	
pH	Monitor Only	SU	Calendar Month Maximum	Jan-Dec	Grab	1 x Day	1
pH	Monitor Only	SU	Calendar Month Minimum	Jan-Dec	Grab	1 x Day	1
Phosphorus, Total (as P)	Monitor Only	mg/L	Calendar Month Average	Jan-Dec	24-Hour Flow Composite	1 x Week	
Precipitation	Monitor Only	in	Calendar Month Total	Jan-Dec	Measurement	1 x Day	
Solids, Total Suspended (TSS)	Monitor Only	mg/L	Calendar Month Average	Jan-Dec	24-Hour Flow Composite	3 x Week	
Solids, Total Suspended (TSS)	Monitor Only	mg/L	Calendar Month Maximum	Jan-Dec	24-Hour Flow Composite	3 x Week	
Temperature, Water (C)	Monitor Only	Deg C	Calendar Month Maximum	Jan-Dec	Measurement, Continuous	1 x Day	
Temperature, Water (C)	Monitor Only	Deg C	Calendar Month Minimum	Jan-Dec	Measurement, Continuous	1 x Day	

The Permittee shall comply with the limits and monitoring requirements as specified below.

Notes:
1 -- Analyze immediately.
2 -- Based on 48.4 mgd average wet weather design flow.
3 -- Based on previously permitted estimated Jan. 1988 average wet weather design flow of 56.47 mgd.
4 -- Disinfection of plant effluent is required when the fecal coliform results is greater than 200 #/100 mL AND the E. Coli result is greater than 126 #/100 mL. Refer to Chapter 2 - Disinfection Requirements for further information.
5 -- Disinfection of plant effluent required if surface water station exceeds limit for fecal coliform. See Chapter 2 - Disinfection Requirements for further details.
6 -- Disinfection of the plant effluent is required any time the E. Coli results are greater than 126 #/100 mL during the period of April - October. Refer to Chapter 2 - Disinfection Requirements for further details.
7 -- EPA method 1631, with clean techniques method 1669, and any revisions to those methods. Please refer to Chapter 3 Mercury Minimization plan for further information.
8 -- EPA test method 1613. Sample type shall be a five-day compoiste.
9 -- EPA test method 220.2.
10 -- EPA test method 239.2.
11 -- EPA test method 601.
12 -- EPA test method 608. Sample type shall be a five-day composite.
13 -- Limit applies upon expiration of this permit.
14 -- USEPA Method 1613 or National Council of Air and Stream Improvement (NCASI) Method 551. The detection limit must be a minimum of 10 pg/L. Method to calculate 2,3,7,8-TCDD Toxicity Equivalence Concentration (TEC) is found in Minn. R. 7052.0230 subp. 5 B. Sample shall be a five-day composite.
15 -- Whenever chlorine is added. Analyze immediately. This means within 15 minutes or less of sample collection. A Method Detection Limit and a Reporting Limit must be established for this parameter. The Reporting Limit cannot be greater than 0.1 mg/L.

Chapter 1. Compliance Schedule

1. Compliance Schedule

Evaluate Sewage Effluent Disinfection Practices

1.1 Submit a progress report on the WLSSD sewage effluent disinfection practices. Submit a progress report by December 31, 2007.

1.2 Submit a report summarizing any studies or changes in disinfection activities that took place during the year. Submit a progress report by December 31, 2008.

1.3 Submit a report summarizing any studies or changes in disinfection activities that took place during the year. Submit a progress report by December 31, 2009.

1.4 Submit a final report. The final report should include a description of Data Analysis, Interpretation and Reporting for any disinfection studies conducted during the past 3 years. Submit a final report by December 31, 2010.

1.5 The interim period for this permit is the date of permit issuance until the date of permit expiration. The Permittee shall attain compliance with final fecal coliform effluent limits by permit expiration.

2. Special Requirements

Construction - Multi-Media Filter Refurbish Project

2.1 The Permittee shall notify the MPCA within 14 days of completion of construction of Phase I of the multi-media refurbish project.

2.2 The Permittee shall notify the MPCA within 14 days of completion of construction of Phase II of the multi-media refurbish project.

Chapter 2. Special Requirements

1. Special Requirements

Disinfection Requirements at SD-001

1.1 A high percentage of the influent at the WLSSD WWTF comes from the pulp and paper industry. In wastewater that is high in vegetative waste, such as in the pulp and paper industry, Klebsiella bacteria interference causes false high fecal coliform readings. In such cases, Escherichia Coli (E. Coli) is a much better indicator of the possible presence of pathogenic organisms than the standard fecal coliform test. Because of interference from the paper waste influent, the Permittee is required to sample for E. Coli bacteria as well as fecal coliform bacteria and provide disinfection of the effluent at SD-001 any time the effluent E. Coli results are greater than 126 MPN/100 mL as calculated by a geometric mean for at least 5 days from the period of April 1 through October 31 of each year during the interim period of this permit

Due to pulp and paper waste interference, disinfection is NOT required if the fecal coliform results are greater than 200 MPN/100 mL AND the E. Coli results are less than 126 MPN/100 mL.

During the disinfection period beginning April 1 through October 31, both fecal coliform and E. Coli samples shall be collected daily at SD-001 (excluding weekends and holidays) until the geometric mean of five consecutive grab samples show E. Coli results less than 126 MPN/100 mL.

Disinfection Requirements at Surface Water Stations (SW-002, SW-003 and SW-004)

Chapter 2. Special Requirements

1. Special Requirements

1.2 The Permittee shall begin disinfection (clorination/dechlorination) of the effluent (SD-001) when the fecal coliform analysis for the Duluth, Cloquet or Superior water treatment plant intakes (SW-002, SW-003 and SW-004 respectively) exceeds a count of 100 MPN/100 mL as determined by the daily grab sample. Disinfection may be discontinued when the fecal coliform result is less than this value for SW-002, SW-003 or SW-004.

1.3 The Permittee shall notify the cities of Duluth, Cloquet and Superior if grab samples of the water treatment plant intakes are greater than 100 MPN/100 mL.

1.4 Grab samples for fecal coliform organisms at the water treatment plant intake stations are not required on weekends and holidays.

Pesticide Monitoring

1.5 Pesticide monitoring for p,p-Dichlorodipheynltrichloroethane (DDT), Dieldrin, and Toxaphene is required quarterly. After one year of monitoring, the Permittee may submit a request to the Agency for a reduction in monitoring for p,p-Dichlorodipheynltrichloroethane (DDT), Dieldrin, and Toxaphene. The Permittee shall be notified in writing if a reduction in monitoring has been authorized. A reduction in monitoring frequency shall not occur until written authorization has been given.

Large Volume/Concentration Sample Plan

1.6 Submit a Large Volume/Concentration Sample Plan within 180 days of permit reissuance. The plan shall address using a "large volume/concentration sample analytical technique" (as a substitute for fish tissue sampling) or other method which meets Minn. R. 7052.0250, subpart 4 on an annual testing and reporting basis, to assess the current levels of TCDD-TEQ and PCBs in the treatment facility's effluent. Reporting shall also discuss the progress of achieving reductions for these constituents.

Pollutant Minimization Plan

1.7 Submit a Pollutant Minimization Plan by 360 days after permit issuance. The Pollutant Minimization Plan shall follow the requirements of Minn. R. 7052.0250, subpart 4 that includes quarterly monitoring of the influent, semi-annual monitoring of significant TCDD-TEQ and PCB sources with an annual review of those facilities, and an annual status report.

1.8 Submit an annual report describing the annual monitoring required by the Large Volume/Concentration Plan and the Pollutant Minimization Plan by September 30 of each year following permit reissuance.

Chapter 3. Mercury Minimization Plan (Lake Superior Basin)

1. Mercury Pollutant Minimization Plan

1.1 Mercury is present in all municipal and many industrial wastewater discharges. Mercury is a powerful neurotoxin that affects human health and the environment. A naturally-occurring element, mercury does not break down into less-harmful substances over time. Instead, mercury released into the environment accumulates in fish and animal tissues, a process known as bioaccumulation. Widespread mercury contamination has prompted the Minnesota Department of Health (MDH) to issue fish consumption advisories throughout the state. Most of Minnesota's impaired waters are contaminated by mercury and other bioaccumulative toxins. The MPCA is carefully evaluating all mercury discharges in the state.

Chapter 3. Mercury Minimization Plan (Lake Superior Basin)

1. Mercury Pollutant Minimization Plan

1.2 In addition to the sampling required in the Limits and Monitoring section of this permit, the Permittee shall sample effluent from the total facility discharge station for Dissolved Mercury and TSS on a quarterly basis throughout the life of this permit. The sampling method is a concurrent grab sample for the two parameters. Dissolved Mercury shall be analyzed using an EPA approved low level mercury analysis method. Samples shall be taken at any time during the calendar quarter and reported on the custom supplemental form provided by the MPCA. The custom supplemental form must be submitted with the DMR for the last month of each quarter.

1.3 The Permittee is required to complete and submit a Mercury Pollutant Minimization Plan (MMP) to the MPCA as detailed in this section. If the Permittee has previously submitted a MMP, it must update its MMP and submit the updated MMP to the MPCA. The purpose of the MMP is to evaluate collection and treatment systems to determine possible sources of mercury as well as potential mercury reduction options. Guidelines for developing a MMP are detailed in this section.

1.4 The specific discharge limits for mercury assigned to this facility are detailed in the limits and monitoring section of this permit. Information gained through the MMP process can be used to reduce mercury concentrations to achieve the specified discharge limit. If the facility is currently achieving this limit, the information gained through the MMP can be used to further reduce mercury in the facility's discharge. As part of its mercury control strategy, the Permittee should consider selecting activities based on the potential of those activities to reduce mercury loadings to the wastewater treatment facility.

1.5 The Permittee shall submit an annual update of the MMP to the MPCA Water Quality Submittals Center by March 1 of each year following MPCA approval of the MMP. The annual report shall include, but is not limited to:

a) All minimization program monitoring results for the year.

b) A list of potential sources of mercury.

c) A summary of all actions taken to meet the effluent limit for mercury.

d) Any updates of the control strategy.

e) Status of the multi-media-filter refurbishment project.

f) Status of any research projects or studies conducted regarding mercury reduction and removal, any analysis of mercury related research, results of any bench scale testing, discussion of any operational changes or descriptions of modifications to the treatment facility.

1.6 The interim period for this permit is the date of permit issuance until the date of permit expiration. The Permittee shall attain compliance with final mercury limits by permit expiration.

Chapter 4. Total Residual Oxidants - Domestic

1. General Requirements

1.1 "Daily Maximum" for Total Residual Chlorine (TRC) concentration limits means:

a. The value of a single sample in a 24-hour period if the concentration of TRC in that sample is 0.038 mg/L or less, or below the Reportable Limit (RL).

b. If the concentration of TRC in the first sample is greater than 0.038 mg/L or greater than the RL, reporting the average of two to twelve samples analyzed in a 24-hour period is allowed. The second sample must be taken two hours after the first sample and subsequent samples are to be taken at one-hour intervals thereafter, not to exceed a total of twelve samples in a 24-hour period. Values below the Reportable Limit for TRC are assumed to be zero for averaging purposes only. Whenever daily TRC values are averaged, the 0.038 mg/L limit must be met and the average value must be reported, not < the RL.

c. The average value of multiple daily TRC effluent sample analyses must meet the 0.038 mg/L limit to be in compliance.

1.2 Total Residual Chlorine must be analyzed immediately. This means within 15 minutes or less of sample collection.

1.3 A Method Detection Limit (MDL) must be established for this parameter.

1.4 The Reportable Limit must be established for this parameter. This should be based on the Method Detection Limit and laboratory, analyst, and equipment used in the analysis. The Reportable Limit cannot be greater than 0.1 mg/L.

1.5 The Method Detection Limit and Reportable Limit should be reassessed when the method, equipment, laboratory, or analyst changes.

1.6 Monitoring results for a single daily maximum value below the Reportable Limit should be reported as "<" the Reportable Limit. For example, if the Reportable Limit is 0.1 mg/L and a parameter is not detected at a value of 0.1 mg/L or greater, the concentration shall be reported as "<0.1mg/L." The symbol "<" means "less than." If sampling is averaged per 1.1 b. above, the 0.038 mg/L limit must be met and the average value must be reported, not < the RL.

1.7 The equipment should be checked against a known standard at least monthly.

Chapter 5. Facility Specific Definitions

1. Definitions

1.1 Please refer to the 'Permit Users Manual' included with the permit for standard definitions.

1.2 "Chronic Toxicity Test" is a static renewal test conducted on an exponentially diluted series of effluent. The purpose is to calculate appropriate biological effect endpoints (NOEC/LOEC and IC25), specified in the referenced chronic manual (Item 6.1). A statistical effect level less than or equal to the Receiving Water Concentration (RWC) constitutes a positive test for chronic toxicity. The RWC equals the 41 percent effluent concentration (based on dilution in 25% of the stream 7Q10 design flow) or 2.4 chronic toxic units, expressed as a monthly average permit limitation.

1.3 "Chronic toxic unit (TUc)" is the reciprocal of the effluent dilution that causes no unacceptable effect on the test organisms by the end of the chronic exposure period.

Chapter 6. Surface Water Stations

1. Requirements for Specific Stations

1.1 SW 002: Submit a monthly DMR monthly by 21 days after the end of each calendar month following permit issuance.

1.2 SW 003: Submit a monthly DMR monthly by 21 days after the end of each calendar month following permit issuance.

1.3 SW 004: Submit a monthly DMR monthly by 21 days after the end of each calendar month following permit issuance.

2. Special Requirements

Cloquet Water Intake

2.1 The Permittee may submit a request to remove the surface water monitoring station for the Cloquet water intake (SW-003) once the city of Cloquet removes all drinking water users from the Lake Superior intake. The Permittee shall submit documentation from the city of Cloquet verifying that all drinking water users have been removed from the Lake Superior intake at SW-003 with it's request for this station's removal.

3. Discharge Monitoring Reports

3.1 The Permittee shall submit monitoring results in accordance with the limits and monitoring requirements for this station. If flow conditions are such that no sample could be acquired, the Permittee shall check the "No Flow" box and note the conditions on the Discharge Monitoring Report (DMR).

4. Sampling Location

4.1 Samples for Station SW-002 shall be taken at the Duluth water treatment plant intake.

4.2 Samples for Station SW-003 shall be taken at the Cloquet water treatment plant intake.

4.3 Samples for Station SW-004 shall be taken at the Superior water treatment plant intake.

5. Winter Sampling Conditions

5.1 The Permittee shall sample flows at the designated monitoring stations including when this requires removing ice to sample the water. If the station is completely frozen throughout a designated sampling month, the Permittee shall check the "No Flow" box on the Discharge Monitoring Report (DMR) and note the ice conditions in Comments on the DMR.

Chapter 7. Surface Discharge Stations

1. Requirements for Specific Stations

1.1 SD 001: Submit a monthly DMR monthly by 21 days after the end of each calendar month following permit issuance.

2. Sampling Location

2.1 Samples for Station SD-001 shall be taken at a point representative of the discharge to the receiving water.

2.2 Samples and measurements required by this permit shall be representative of the monitored activity.

3. Surface Discharges

3.1 Floating solids or visible foam shall not be discharged in other than trace amounts.

3.2 Oil or other substances shall not be discharged in amounts that create a visible color film.

3.3 The Permittee shall install and maintain outlet protection measures at the discharge stations to prevent erosion.

Chapter 7. Surface Discharge Stations

4. Winter Sampling Conditions

4.1 The Permittee shall sample flows at the designated monitoring stations including when this requires removing ice to sample the water. If the station is completely frozen throughout a designated sampling month, the Permittee shall check the "No Discharge" box on the Discharge Monitoring Report (DMR) and note the ice conditions in Comments on the DMR.

5. Chronic Whole Effluent Toxicity (WET) Testing

5.1 The Permittee shall conduct annual chronic toxicity test batteries on Discharge SD-001 beginning with the issuance date of the permit. Any test that exceeds 2.4 TUc shall be re-tested according to the provisions of Chapter 6, Section 5.6 to determine if toxicity is still present above the monthly average limit of 2.4 TUc.

5.2 Submit the first test battery results within one (1) year of permit reissuance.

5.3 Submit the second test battery results within two (2) years of permit reissuance.

5.4 Submit the third test batter results within three (3) years of permit reissuance.

5.5 Submit the fourth or final test battery results with the application for permit reissuance within 180 days prior to the expiration date of this permit.

Chapter 7. Surface Discharge Stations

5. Chronic Whole Effluent Toxicity (WET) Testing

Positive Toxicity Result for WET

5.6 Should a test exceed the monthly average limit for whole effluent toxicity, the permittee shall conduct two repeat test batteries to be completed within thirty (30) days after completion of the positive test. These tests will be used to determine if toxicity exceeding the monthly average limit remains present, based on the average of the two repeat tests. If no toxicity is present above the monthly average limit, the Permittee shall return to the test frequency specified by the permit. If the repeat test batteries indicate toxicity above the monthly average limit, the Permittee shall submit for Agency review a plan for conducting a Toxicity Reduction Evaluation (TRE), and at a minimum provice quarterly reports regarding progress towards the identity, source, and any plans for the removal of the toxicity. The TRE shall be consistent with EPA guidance (Toxicity Reduction Evaluation Protocol for Municipal Wastewater Treatment Plants - EPA/600/2-88/062, April 1989; Toxicity Identification Evaluation: Characterization of Chronically Toxic Effluents, Phase I - EPA 600/6-91/005F, May 1992), or subsequent procedures approved by the Agency in attempting to identify and remove the source of the toxicity.

6. Chronic Toxicity Testing - Species and Procedural Requirements

6.1 Tests shall be conducted in accordance with procedures outlined in EPA-821-R-02-013 "Short-term Methods for Estimating the Chronic Toxicity of Effluents and Receiving Waters to Freshwater Organisms" - Fourth Edition (Chronic Manual), any revisions to the Manual. Any test that is begun with an effluent sample that exceeds a total ammonia concentration of 5 mg/L shall use the carbon dioxide-controlled atmosphere technique to control pH drift.

6.2 Test organisms for each test battery shall include the fathead minnow (Pimephales promelas)-Method 1000.0 and Ceriodaphnia dubia-Method 1002.0.

6.3 Static renewal chronic serial dilution tests of the effluent shall consist of a control, 12, 25, 50, 75 and 100% effluent. A 41% Receiving Water Concentration (RWC) may be substituted for the 50% effluent concentration or provided in addition to the above dilution series.

6.4 All effluent samples shall be flow proportioned, 24-hour composites. Test solutions shall be renewed daily from each fresh composite. Testing of the effluent shall begin within 36 hours of sample collection. Receiving water collected outside of the influence of discharge shall be used for dilution and controls.

6.5 Any deviation from the requirements of this section shall first be approved by the MPCA.

7. Chronic Toxicity Testing - Quality Control and Report Submittals

7.1 Any test that does not meet quality control measures, or results which the Permittee believes reflect an artifact of testing shall be repeated within two (2) weeks. These reports shall contain information consistent with the report preparation section of the Chronic Manual. The MPCA shall make the final determination regarding test validity.

Chapter 7. Surface Discharge Stations

8. Priority Pollutants - Monitoring Requirements

8.1 The Permittee shall monitor the effluent annually for the following specified priority pollutants.

Monitoring shall be for the organic priority pollutants identified under the volatile, acid, base/neutral, and pesticide fractions using EPA methods 603, 624, 625 and 608 (40 CFR Part 136, October 25, 1984) as listed in Table II of 40 CFR Part 122, Appendix D.

The following priority pollutant total metals shall also be monitored using either EPA method 200.7 or EPA method 200.8 or their corresponding graphite furnace method found in Table IB of 40 CFR Part 136: antimony, arsenic, beryllium, cadmium, chromium, copper, lead, nickel, selenium, silver, thallium, and zinc. In addition, the Permittee shall monitor for Total Cyanide (EPA method 335), Total Phenolic Compounds (EPA method 420), and Hardness (total as CaCO3) (EPA method 130 or AA method). Total Mercury shall be monitored by EPA method 1631, if not already required by the permit.

The sampling results shall be submitted to the MPCA within 30 days of completion of the analysis.

8.2 Submit the annual priority pollutant sample results by December 31 of each year following permit reissuance.

9. Discharge Monitoring Reports

9.1 The Permittee shall submit monitoring results for discharges in accordance with the limits and monitoring requirements for this station. If no discharge occurred during the reporting period, the Permittee shall check the "No Discharge" box on the Discharge Monitoring Report (DMR).

10. Reporting Requirements

10.1 The analytical techniques for analysis of dioxin shall be the US Environmental Protection Agency (EPA) method 1613. If the dioxin measurement is below the detection level of 10 pg/L, the measurement shall be considered to be in compliance with the permit effluent limit. If the dioxin measurement is equal to or greater than 10 pg/L, the measurement shall be reported as the actual value on the monthly Discharge Monitoring Report, otherwise, the measurement shall be reported as less than (<) 10 pg/L.

10.2 The analytical technique for analysis of Total Aroclor PCB's shall be the U.S. EPA method 608. If the PCB measurement is below the detection level of 0.2 ug/L, the measurement shall be considered to be in compliance with the permit effluent limit. If the PCB measurement is greater than or equal to 0.2 ug/L, the measurement shall be reported as the actual value on the Discharge Monitoring Report, otherwise, the measurement shall be reported as less than (<) 0.2 ug/L.

Chapter 8. Waste Stream Stations

1. Requirements for Specific Stations

1.1 WS 001: Submit a monthly DMR monthly by 21 days after the end of each calendar month following permit issuance.

2. Sampling Location

2.1 Grab and composite samples at Station WS-001 shall be collected at a point representative of total influent flow to the system.

Chapter 9. Domestic Wastewater -- Mechanical System

1. Bypass Structures

1.1 All bypass structures shall be manually controlled and kept locked at all times.

Chapter 9. Domestic Wastewater -- Mechanical System

2. Sanitary Sewer Extension Permit

2.1 The Permittee is required to obtain a Sanitary Sewer Extension Permit from the MPCA prior to the start of construction of any addition, extension or replacement to the sanitary sewer.

3. Operator Certification

3.1 The Permittee shall provide a Class A state certified operator who is in direct responsible charge of the operation, maintenance and testing functions required to ensure compliance with the terms and conditions of this permit.

3.2 The Permittee shall provide the appropriate number of operators with a Type IV certification to be responsible for the land application of biosolids or semisolids from commercial or industrial operations.

3.3 If the Permittee chooses to meet operator certification requirements through a contractual agreement, the Permittee shall provide a copy of the contract to the MPCA. The contract shall include the certified operator's name, certificate number, company name if appropriate, and evidence that the operation is being adequately supervised by a properly certified operator.

3.4 The Permittee shall notify the MPCA within 30 days of a change in operator certification or contract status.

Chapter 10. Biosolids Land Application

1. Authorization

1.1 This permit authorizes the Permittee to store and land apply domestic wastewater treatment biosolids in accordance with the provisions in this chapter and Minnesota Rules, ch. 7041.

1.2 This permit authorizes the Permittee to store and manage domestic wastewater treatment biosolids at the off-site biosolids storage facility in accordance with the provisions in this chapter and Minnesota Rules, ch. 7041. There shall be no processing of biosolids at the biosolids storage facility. The Permittee will need a permit modification before any processing of biosolids can occur at this site.

1.3 Permittees who prepare bulk biosolids must obtain approval of the sites on which bulk biosolids are applied before they are applied unless they are exceptional quality biosolids. Site application procedures are set forth in Minnesota Rules, pt. 7041.0800.

2. Compliance Responsibility

2.1 The Permittee is responsible for ensuring that the applicable requirements in this chapter and Minnesota Rules ch. 7041 are met when biosolids are prepared, distributed, or applied to the land.

3. Notification Requirements

3.1 The Permittee shall provide information needed to comply with the biosolids requirements of Minnesota Rules, ch. 7041 to others who prepare or use the biosolids.

Chapter 10. Biosolids Land Application

4. Pollutant Limits

4.1 Biosolids which are applied to the land must not exceed the ceiling concentrations in Table 1 and must not be applied so that the cumulative amounts of pollutant in Table 2 are exceeded.

Table 1 Ceiling Concentrations (dry weight basis)

Parameter in units mg/kg
Arsenic 75
Cadmium 85
Copper 4300
Lead 840
Mercury 57
Molybdenum 75
Nickel 420
Selenium 100
Zinc 7500

Table 2 Cumulative Loading Limits

Parameter in units lbs/acre
Arsenic 37
Cadmium 35
Copper 1339
Lead 268
Mercury 15
Molybdenum not established*
Nickel 375
Selenium 89
Zinc 2500

*The cumulative limit for molybdenum has not been established at the time of permit issuance

5. Pathogen and Vector Attraction Reduction

5.1 Biosolids shall be processed, treated, or be incorporated or injected into the soil to meet one of the vector attraction reduction requirements in Minnesota Rules, pt. 7041.1400.

5.2 Biosolids shall be processed or treated by one of the alternatives in Minnesota Rules, pt. 7041.1300 to meet the Class A or Class B standards for the reduction of pathogens. When Class B biosolids are applied to the land, the site restrictions in Minnesota Rules, pt. 7041.1300 must also be met.

Chapter 10. Biosolids Land Application

5. Pathogen and Vector Attraction Reduction

5.3 The minimum duration between application and harvest, grazing or public access to areas where Class B biosolids have been applied to the land is as follows:

a. 14 months for food crops whose harvested parts may touch the soil/biosolids mixture (such as melons, squash, tomatoes, etc.), when biosolids are surface applied, incorporated or injected.

b. 20 months or 38 months depending on the application method for food crops whose harvested parts grow in the soil (such as potatoes, carrots, onions, etc.). The 20 month time period is required when biosolids are surface applied or surface applied and incorporated after they have been on the soil surface for at least four (4) months. The 38 month time period is required when the biosolids are injected or surface applied and incorporated within four (4) months of application.

c. 30 days for feed crops, other food crops (such as field corn, sweet corn, etc.), hay or fiber crops when biosolids are surface applied, incorporated or injected.

d. 30 days for grazing of animals when biosolids are surface applied, incorporated or injected.

e. One year where there is a high potential for public contact with the site, (such as a reclamation site located in populated areas, a construction site located in a city, turf farms, plant nurseries, etc.) and 30 days where there is low potential for public contact (such as agricultural land, forest, a reclamation site located in an unpopulated area, etc.) when biosolids are surface applied, incorporated, or injected.

5.4 Biosolids stored at the off-site biosolids storage facility shall have already met Minnesota Rules, pt. 7041.1300 to meet the Class A or Class B standards for the reduction of pathogens.

6. Management Practices

6.1 The management practices for the land application of biosolids are described in detail in Minnesota Rules, pt. 7041.1200 and must be followed unless specified otherwise in a site approval letter or a permit issued by the MPCA.

6.2 Overall management requirements:

a. Biosolids must not be applied to the land if it is likely to adversely affect a threatened or endangered species listed under Section 4 of the Endangered Species Act or its designated critical habitat.

b. Biosolids must not be applied to flooded, frozen or snow covered ground so that the biosolids enter wetlands or other waters of the state.

c. Biosolids must be applied at an agronomic rate unless specified otherwise by the MPCA in a permit.

d. Biosolids shall not be applied within 33 feet of a wetland or waters of the state unless specified otherwise by the MPCA in a permit.

7. Monitoring Requirements

7.1 Representative samples of biosolids applied to the land must be analyzed by methods specified in Minnesota Rule pt. 7041.3200 for the following parameters: arsenic, cadmium, copper, lead, mercury, molybdenum, nickel, selenium, zinc, Kjeldahl nitrogen, ammonia nitrogen, total solids, volatile solids, phosphorus, potassium and pH.

Chapter 10. Biosolids Land Application

7. Monitoring Requirements

7.2 At a minimum, biosolids must be monitored at the frequencies specified in Table 3 for the parameters listed above, and any pathogen or vector attraction reduction requirements in Minnesota Rules, pts. 7041.1300 and 7041.1400 if used to determine compliance with those parts.

Table 3 Minimum Sampling Frequencies

Biosolids Applied* (metric tons/365-day period)	Biosolids Applied* (tons/365-day period)	Frequency (times/365-day period)
>0 but <290	>0 but <320	1
>=290 but <1,500	>=320 but <1,650	4
>=1,500 but <15,000	>=1,650 but <16,500	6
>=15,000	>=16,500	12

* Either the amount of bulk biosolids applied to the land or the amount of biosolids received by a person who prepares biosolids that are sold or given away in a bag or other container for application to the land (dry weight basis).

7.3 Representative samples of biosolids that are transferred to storage units and are stored for more than two years shall be analyzed by methods specified in Minnesota Rule pt. 7041.3200 for each cropping year they are stored for the following parameters: arsenic, cadmium, copper, lead, molybdenum, nickel, selenium, and zinc. Mercury is specifically NOT included in the stored biosolids analysis because of the short holding time [28 days] required between sampling and analysis.

7.4 Increased sampling frequencies are specified for the parameters listed in Table 4. Sampling at a frequency at twice the minimum frequencies in Table 3 is required if concentrations listed in Table 4 are exceeded (based on the average of all analyses made during the previous cropping year).

Table 4 Increased Frequency of Sampling

Parameter (mg/kg dry weight basis)	
Arsenic	38
Cadmium	43
Copper	2150
Lead	420
Mercury	28
Molybdenum	38
Nickel	210
Selenium	50
Zinc	3750

8. Records

8.1 The Permittee shall keep records of the information necessary to show compliance with pollutant concentrations and loadings, pathogen reduction requirements, vector attraction reduction requirements and management practices as specified in Minnesota Rules, pt. 7041.1600, as applicable to the quality of biosolids produced.

9. Reporting Requirements

9.1 By December 31 following the end of each cropping year, the Permittee shall submit a Biosolids Annual Report for the land application of biosolids on a form provided by or approved by the MPCA. The report shall include the requirements in Minnesota Rules, part 7041.1700.

Chapter 10. Biosolids Land Application

9. Reporting Requirements

9.2 If, during any cropping year, biosolids were transferred, or not land applied, the Permittee shall submit a Biosolids Annual Report by December 31 following the end of the cropping year. The report shall state that biosolids were not land applied, how much was generated, and where they were transferred to.

9.3 For biosolids that are stored for more than two years, the Biosolids Annual Report must also include the analytical data from the representative sample of the biosolids generated during the cropping year.

9.4 The Permittee shall submit the Biosolids Annual Report to:

Biosolids Coordinator
Minnesota Pollution Control Agency
520 Lafayette Road North
St. Paul, Minnesota 55155-4194

9.5 The Permittee must notify the MPCA in writing when 90 percent or more of any of the cumulative pollutant loading rates listed for any Land Application Sites has been reached for a site.

9.6 The Biosolids Annual Report must include the quantity of biosolids transported to and removed from the off-site biosolids storage facility on a monthly basis.

This land application report for the land application of biosolids from this facility may be attached to the Biosolids Annual Report. The land application report must indicate what land application sites received biosolids from this facility and the quantity.

Chapter 11. Domestic Wastewater -- Pretreatment

1. Pretreatment - Definitions

1.1 For the purposes of these pretreatment requirements, "Significant Industrial User" (SIU) shall mean any industrial user (IU) which:

a. is subject to Categorical Pretreatment Standards, under 40 CFR 403.6 and 40 CFR Chapter I, Subchapter N;

b. discharges an average of 25,000 gallons per day or more of process wastewater to the POTW;

c. contributes a process wastestream which makes up five percent or more of the average dry weather hydraulic or organic capacity of the POTW treatment plant; or

d. is designated as significant by the Permittee on the basis that the Industrial User has a reasonable potential for adversely affecting the POTW's operation or for violating any pretreatment standard or requirement.

2. Exemption

2.1 Industrial users qualifying as significant solely on the basis of criteria b. or c. above may be exempted from consideration as a SIU if the Permittee finds that they have no reasonable potential to adversely affect the POTW's operation or to violate pretreatment standards or requirements.

2.2 The Permittee must notify the MPCA in writing of any Industrial User so exempted and provide justification for their exemption.

Chapter 11. Domestic Wastewater -- Pretreatment

3. Pretreatment - Delegated Authority

3.1 Under the authority of the General Pretreatment Regulations (40 CFR 403), the Permittee's pretreatment program was approved on June 24, 1985 and as ammended through November 29, 2006. The Permittee has been delegated authority to operate as the Publicly Owned Treatment Works (POTW) control authority under the General Pretreatment Regulations. The Permittee shall fully and effectively implement and operate the approved pretreatment program according to the legal authorities contained therein and the General Pretreatment Regulations.

3.2 In addition to the Prohibitions contained in the General Pretreatment Regulations and the approved program, the Permittee shall prohibit new discharges of non-contact cooling waters to the POTW unless there are no cost-effective alternatives.

3.3 Existing discharges of non-contact cooling water to the wastewater treatment facility shall be eliminated where elimination is cost effective, or where an infiltration/inflow analysis and sewer system evaluation survey indicate the need for such removal.

3.4 Pollutants of concern in the administration of the Permittee's pretreatment program shall be considered in the determination of the Significance of Industrial Users, monitoring of Significant Industrial Users, establishment of limitations on users, and communications with users. The following pollutants shall be considered to be pollutants of concern: pollutants limited in this permit, pollutants for which monitoring is required in this permit, pollutants that are likely to cause inhibition of the Permittee's POTW, pollutants that are likely to interfere with sludge disposal, pollutants for which the Permittee's treatment facility has limited capacity, pollutants of concern to the Permittee, Mercury and Phosphorus.

4. Legal Authority

4.1 The Permittee shall maintain the legal authority that allows it to fully implement its approved pretreatment program in conformance with the requirements of the General Pretreatment Regulation.

5. Industrial Users Inventory

5.1 The Permittee shall update its inventory of Industrial Users at least annually and as needed to ensure that all SIUs are properly identified, characterized and categorized. The Permittee shall:

a. identify Industrial Users which may be subject to the POTW pretreatment program;

b. characterize the discharge of pollutants to the POTW by the Industrial User; and

c. determine the applicable categories for industrial users subject to National Categorical Pretreatment Standards.

5.2 Within 30 days of the designation of an Industrial User as significant, the Permittee shall notify the SIU of all applicable pretreatment standards and requirements. The Permittee shall also notify all Industrial Users of all applicable pretreatment standards and requirements, and the Industrial Users' obligation to comply with applicable requirements under Subtitles C and D of the Resource Conservation and Recovery Act (RCRA).

6. Local Limits

6.1 The Permittee shall develop, maintain and enforce specific local limits to implement the prohibitions listed in 40 CFR 403.5(a)(1) and 403.5(b).

6.2 The Permittee shall evaluate the need to revise local limits to effectively implement these prohibitions at least once during the term of this permit. This evaluation shall make use of the data obtained from the influent, effluent and biosolids monitoring required of this permit in its evaluation.

Chapter 11. Domestic Wastewater -- Pretreatment

6. Local Limits

6.3 The evaluation shall include a pollutant mass balance including all of the following pollutants:

a. pollutants which are limited in the NPDES permit for that treatment works;

b. pollutants which are discharged by Industrial Users to that treatment works and which are limited in the permit issued to the Industrial User; and

c. pollutants which the Permittee believes may be causing or contributing to interference or pass-through, or adversely impacting biosolids quality.

The mass balance shall attempt to balance the source of the pollutants (Industrial Users and other sources), the measured headworks loading of the pollutants and the fates of the pollutants (discharge, biosolids and others). This mass balance shall make use of all available and appropriate monitoring data.

7. Permit Significant Industrial Users

7.1 The Permittee shall issue and reissue permits to all existing SIUs within 180 days of expiration of the existing SIU permit for existing SIUs, or identification of a new SIU. The permit shall contain at least the following:

a. a statement of duration (no longer than five (5) years);

b. a statement of nontransferability without prior approval by the POTW, and provision of a copy of the existing permit to the new owner or operator;

c. discharge limits based on applicable prohibited discharges in the General Pretreatment Regulation (40 CFR 403.5), National Categorical Pretreatment Standards, and local limits and local discharge prohibitions;

d. self-monitoring, sampling, reporting, notification and record keeping requirements, including an identification of the pollutants to be monitored, sampling location, sampling frequency and sample type; and

e. a statement of applicable civil and criminal penalties for violation of pretreatment standards and requirements, and any applicable compliance schedule.

7.2 The Permittee may not extend the compliance date beyond applicable federal deadlines in any compliance schedule.

8. Compliance Monitoring and Inspections

8.1 The Permittee shall randomly sample and analyze the discharge from Industrial Users and conduct surveillance activities to identify, independent of information supplied by Industrial Users, noncompliance with pretreatment standards. The Permittee shall inspect and sample the discharge from each SIU at least once a year.

8.2 The Permittee shall, at least once every two years, evaluate whether each SIU needs a plan to control spill and slug discharges as provided in the General Pretreatment Regulation under 40 CFR 403.8(f)(2)(v). Where a control plan is determined to be needed, the Permittee shall require, in the permit issued to the industrial user, that the industrial user develop and implement such a plan.

9. Industrial User Reports

9.1 The Permittee shall receive and analyze self-monitoring reports and other reports and notices submitted by Industrial Users in accordance with requirements contained in permits issued by the Permittee and in accordance with the General Pretreatment Regulation.

Chapter 11. Domestic Wastewater -- Pretreatment

10. Enforcement Actions

10.1 The Permittee shall investigate instances of noncompliance with pretreatment standards and requirements as indicated by reports submitted by Industrial Users, by information collected by the Permittee or by other means.

10.2 The Permittee shall collect samples, analyze data and compile information in a manner to ensure accuracy and admissibility in enforcement proceedings and judicial actions.

10.3 In instances of noncompliance, the Permittee shall take effective enforcement action in accordance with the approved enforcement response plan.

11. Data Management and Record Keeping

11.1 The Permittee shall maintain records documenting pretreatment activities. These records shall contain an inventory of industrial users, characterization of discharges, compliance status, permit status, and records of enforcement actions.

11.2 The Permittee shall retain all records of monitoring activities and results for at least three (3) years and shall make the records available to EPA and the MPCA upon request.

12. Public Participation

12.1 The Permittee shall comply with public participation requirements of 40 CFR 25 in the enforcement of national pretreatment standards.

12.2 The Permittee shall, once a year, publish the names of Industrial Users that were in significant noncompliance with pretreatment requirements, as defined in 40 CFR 403.8(f)(2)(vii), any time during the previous twelve (12) months.

12.3 All industrial discharge data shall be made available to the public upon request.

13. Program Resources

13.1 The Permittee shall acquire sufficient resources and qualified personnel to carry out the program implementation procedures described in this permit.

14. Program Modification

14.1 The Permittee shall submit to the MPCA a statement of the basis for desired program modifications and a modified program description for all substantial modifications as defined in 40 CFR 403.18(c). The Permittee must await formal approval from the MPCA before implementing substantial program modifications.

14.2 The Permittee shall notify the MPCA of non-substantial modifications to its pretreatment program at least 45 days prior to implementing the modification.

14.3 Non-substantial modifications are deemed approved unless the MPCA notifies the Permittee otherwise within 45 days.

15. Notification Requirements

15.1 The Permittee shall notify the MPCA of planned or actual changes in the discharges from SIUs which will require changes to the user's control document and which may affect the Permittee's effluent.

15.2 The Permittee shall supply the MPCA with information regarding the discharge, compliance status, or enforcement actions taken for any industrial user upon request.

Chapter 11. Domestic Wastewater -- Pretreatment

16. Pretreatment Annual Report

16.1 The Permittee shall submit a report annually to the following address:

Pretreatment Coordinator
Minnesota Pollution Control Agency
520 Lafayette Road North
St. Paul, Minnesota 55155-4194

The report shall describe the Permittee's pretreatment activities during the previous calendar year and is due on February 28 of each year and shall contain at least the following information.

16.2 The Pretreatment Annual Report shall describe the pretreatment activities during the previous calendar year and shall contain the following lists:

a. An updated list of the Permittee's significant industrial users including their names, addresses, any applicable federal categorical standards, and a summary total of significant industrial users and categorical industrial users.

b. A separate list of deletions from and additions to previously submitted lists of SIUs, with a brief explanation for each deletion.

c. A list of SIUs with expired permits.

16.3 The Pretreatment Annual Report shall contain the following descriptions:

a. A characterization of the compliance status of each SIU during the reporting year. The compliance characterization shall at least indicate status as follows:

1) no violations noted with discharge limits, and compliance with monitoring and reporting requirements is sufficient to determine compliance with discharge limitations;
2) violations were noted with discharge limits, or violations of monitoring and reporting requirements that may have impaired the Permittee's ability to determine compliance with discharge limitations were noted, but the noncompliance does not meet the definition of significant noncompliance as referenced below;
3) significant noncompliance (as defined by 40 CFR 403.8(f)(2)(vii)); or
4) status unknown.

b. A description of the standards or requirements that were violated for SIUs that are out of compliance with pretreatment standards. For an SIU in significant noncompliance, the characterization shall note the reason for the significant violations (if known) and whether the SIU is on a compliance schedule. If the SIU is on a compliance schedule, the date of final compliance shall be noted in the report.

c. A description of any upsets, interference, or pass through incidents at the POTW which the Permittee knows or suspects were caused by Industrial Users of the POTW system. The description shall include the reasons why the incidents occurred, the corrective actions taken, and the Industrial Users responsible, if known.

16.4 The Permittee shall monitor the treatment plant influent, effluent and biosolids concurrently at least two (2) times per year for arsenic, cadmium, chromium, copper, cyanide, lead, mercury, nickel, silver and zinc. This monitoring may be combined with any other monitoring. The results of this monitoring shall be reported in the pretreatment annual report, as well as on the routine Discharge Monitoring Reports. The results of this monitoring shall also be used in the evaluation of local limits as required in the Pretreatment section of this chapter.

Chapter 11. Domestic Wastewater -- Pretreatment

16. Pretreatment Annual Report

16.5 The Pretreatment Annual Report shall contain the following summaries:

a. A summary of the discharge monitoring data for each SIU for the reporting year. This summary shall include all available data and shall accurately represent the discharge by the user.

b. A summary of the inspection and sampling activities conducted by the POTW during the reporting year to gather information and data regarding Industrial Users. The summary shall include identification of the Industrial Users subject to surveillance by the POTW and an indication of the type (inspection or sampling) and the number of surveillance activities performed.

c. A summary of the enforcement actions by the POTW during the reporting year. The summary shall include the names and addresses of the Industrial Users that were the subject of enforcement action, the enforcement action taken, and whether the Industrial User has returned to compliance.

d. A summary of the Permittee's pretreatment budget for the reporting year, including the cost of personnel, equipment and services employed in the pretreatment program.

e. A summary of public participation activities to involve and inform the public. This shall include a copy of the annual publication of significant noncompliance, if such publication was needed to comply with 40 CFR 403.8(f)(2)(vii).

Chapter 12. Total Facility Requirements

1. General Requirements

General Requirements

1.1 Incorporation by Reference. The following applicable federal and state laws are incorporated by reference in this permit, are applicable to the Permittee, and are enforceable parts of this permit: 40 CFR pts. 122.41, 122.42, 136, 403 and 503; Minn. R. pts. 7001, 7041, 7045, 7050, 7060, and 7080; and Minn. Stat. Sec. 115 and 116.

1.2 Permittee Responsibility. The Permittee shall perform the actions or conduct the activity authorized by the permit in compliance with the conditions of the permit and, if required, in accordance with the plans and specifications approved by the Agency. (Minn. R. 7001.0150, subp. 3, item E)

1.3 Toxic Discharges Prohibited. Whether or not this permit includes effluent limitations for toxic pollutants, the Permittee shall not discharge a toxic pollutant except according to Code of Federal Regulations, Title 40, sections 400 to 460 and Minnesota Rules, parts 7050.0100 to 7050.0220 and 7052.0010 to 7052.0110 (applicable to toxic pollutants in the Lake Superior Basin) and any other applicable MPCA rules. (Minn. R. 7001.1090, subp.1, item A)

1.4 Nuisance Conditions Prohibited. The Permittee's discharge shall not cause any nuisance conditions including, but not limited to: floating solids, scum and visible oil film, acutely toxic conditions to aquatic life, or other adverse impact on the receiving water. (Minn. R. 7050.0210 subp. 2)

1.5 Property Rights. This permit does not convey a property right or an exclusive privilege. (Minn. R. 7001.0150, subp. 3, item C)

1.6 Liability Exemption. In issuing this permit, the state and the MPCA assume no responsibility for damage to persons, property, or the environment caused by the activities of the Permittee in the conduct of its actions, including those activities authorized, directed, or undertaken under this permit. To the extent the state and the MPCA may be liable for the activities of its employees, that liability is explicitly limited to that provided in the Tort Claims Act. (Minn. R. 7001.0150, subp. 3, item O)

Chapter 12. Total Facility Requirements

1. General Requirements

1.7 The MPCA's issuance of this permit does not obligate the MPCA to enforce local laws, rules, or plans beyond what is authorized by Minnesota Statutes. (Minn. R. 7001.0150, subp.3, item D)

1.8 Liabilities. The MPCA's issuance of this permit does not release the Permittee from any liability, penalty or duty imposed by Minnesota or federal statutes or rules or local ordinances, except the obligation to obtain the permit. (Minn. R. 7001.0150, subp.3, item A)

1.9 The issuance of this permit does not prevent the future adoption by the MPCA of pollution control rules, standards, or orders more stringent than those now in existence and does not prevent the enforcement of these rules, standards, or orders against the Permittee. (Minn. R. 7001.0150, subp.3, item B)

1.10 Severability. The provisions of this permit are severable and, if any provisions of this permit or the application of any provision of this permit to any circumstance are held invalid, the application of such provision to other circumstances and the remainder of this permit shall not be affected thereby.

1.11 Compliance with Other Rules and Statutes. The Permittee shall comply with all applicable air quality, solid waste, and hazardous waste statutes and rules in the operation and maintenance of the facility.

1.12 Inspection and Entry. When authorized by Minn. Stat. Sec. 115.04; 115B.17, subd. 4; and 116.091, and upon presentation of proper credentials, the agency, or an authorized employee or agent of the agency, shall be allowed by the Permittee to enter at reasonable times upon the property of the Permittee to examine and copy books, papers, records, or memoranda pertaining to the construction, modification, or operation of the facility covered by the permit or pertaining to the activity covered by the permit; and to conduct surveys and investigations, including sampling or monitoring, pertaining to the construction, modification, or operation of the facility covered by the permit or pertaining to the activity covered by the permit. (Minn. R. 7001.0150, subp.3, item I)

1.13 Control Users. The Permittee shall regulate the users of its wastewater treatment facility so as to prevent the introduction of pollutants or materials that may result in the inhibition or disruption of the conveyance system, treatment facility or processes, or disposal system that would contribute to the violation of the conditions of this permit or any federal, state or local law or regulation.

Sampling

1.14 Representative Sampling. Samples and measurements required by this permit shall be conducted as specified in this permit and shall be representative of the discharge or monitored activity. (40 CFR 122.41 (j)(1))

1.15 Additional Sampling. If the Permittee monitors more frequently than required, the results and the frequency of monitoring shall be reported on the Discharge Monitoring Report (DMR) or another MPCA-approved form for that reporting period. (Minn. R. 7001.1090, subp. 1, item E)

1.16 Certified Laboratory. A laboratory certified by the Minnesota Department of Health shall conduct analyses required by this permit. Analyses of dissolved oxygen, pH, temperature and total residual oxidants (chlorine, bromine) do not need to be completed by a certified laboratory but shall comply with manufacturers specifications for equipment calibration and use. (Minn. R. 4740.2010 and 4740.2050 through 2120)

1.17 Sample Preservation and Procedure. Sample preservation and test procedures for the analysis of pollutants shall conform to 40 CFR Part 136 and Minn. R. 7041.3200.

1.18 Equipment Calibration: Flow meters, pumps, flumes, lift stations or other flow monitoring equipment used for purposes of determining compliance with permit shall be checked and/or calibrated for accuracy at least twice annually. (Minn. R. 7001.0150, subp. 2, items B and C)

Chapter 12. Total Facility Requirements

1. General Requirements

1.19 Maintain Records. The Permittee shall keep the records required by this permit for at least three years, including any calculations, original recordings from automatic monitoring instruments, and laboratory sheets. The Permittee shall extend these record retention periods upon request of the MPCA. The Permittee shall maintain records for each sample and measurement. The records shall include the following information (Minn. R. 7001.0150, subp. 2, item C):

a. The exact place, date, and time of the sample or measurement;

b. The date of analysis;

c. The name of the person who performed the sample collection, measurement, analysis, or calculation; and

d. The analytical techniques, procedures and methods used; and

e. The results of the analysis.

1.20 Completing Reports. The Permittee shall submit the results of the required sampling and monitoring activities on the forms provided, specified, or approved by the MPCA. The information shall be recorded in the specified areas on those forms and in the units specified. (Minn. R. 7001.1090, subp. 1, item D; Minn. R. 7001.0150, subp. 2, item B)

Required forms may include:

Supplemental Report Form (Supplemental)
Individual values for each sample and measurement must be recorded on the Supplemental which, if required, will be provided by the MPCA. Supplementals shall be submitted with the appropriate DMRs. You may design and use your own Supplemental; however it must be approved by the MPCA. Note: Required Summary information MUST also be recorded on the DMR. Summary information that is submitted ONLY on the Supplemental does not comply with the reporting requirements.

1.21 Submitting Reports. DMRs and Supplementals shall be submitted to:

MPCA
Attn: Discharge Monitoring Reports
520 Lafayette Road North
St. Paul, Minnesota 55155-4194.

DMRs and Supplementals shall be postmarked by the 21st day of the month following the sampling period or as otherwise specified in this permit. A DMR shall be submitted for each required station even if no discharge occurred during the reporting period. (Minn. R. 7001.0150, subps. 2.B and 3.H)

Other reports required by this permit shall be postmarked by the date specified in the permit to:

MPCA
Attn: WQ Submittals Center
520 Lafayette Road North
St. Paul, Minnesota 55155-4194

1.22 Incomplete or Incorrect Reports. The Permittee shall immediately submit an amended report or DMR to the MPCA upon discovery by the Permittee or notification by the MPCA that it has submitted an incomplete or incorrect report or DMR. The amended report or DMR shall contain the missing or corrected data along with a cover letter explaining the circumstances of the incomplete or incorrect report. (Minn. R. 7001.0150 subp. 3, item G)

Chapter 12. Total Facility Requirements

1. General Requirements

1.23 Required Signatures. All DMRs, forms, reports, and other documents submitted to the MPCA shall be signed by the Permittee or the duly authorized representative of the Permittee. Minn. R. 7001.0150, subp. 2, item D. The person or persons that sign the DMRs, forms, reports or other documents must certify that he or she understands and complies with the certification requirements of Minn. R. 7001.0070 and 7001.0540, including the penalties for submitting false information. Technical documents, such as design drawings and specifications and engineering studies required to be submitted as part of a permit application or by permit conditions, must be certified by a registered professional engineer. (Minn. R. 7001.0540)

1.24 Detection Level. The Permittee shall report monitoring results below the reporting limit (RL) of a particular instrument as "<" the value of the RL. For example, if an instrument has a RL of 0.1 mg/L and a parameter is not detected at a value of 0.1 mg/L or greater, the concentration shall be reported as "<0.1 mg/L." "Non-detected," "undetected," "below detection limit," and "zero" are unacceptable reporting results, and are permit reporting violations. (Minn. R. 7001.0150, subp. 2, item B)

Where sample values are less than the level of detection and the permit requires reporting of an average, the Permittee shall calculate the average as follows:

a. If one or more values are greater than the level of detection, substitute zero for all nondetectable values to use in the average calculation.

b. If all values are below the level of detection, report the averages as "<" the corresponding level of detection.

c. Where one or more sample values are less than the level of detection, and the permit requires reporting of a mass, usually expressed as kg/day, the Permittee shall substitute zero for all nondetectable values. (Minn. R. 7001.0150, subp. 2, item B)

1.25 Records. The Permittee shall, when requested by the Agency, submit within a reasonable time the information and reports that are relevant to the control of pollution regarding the construction, modification, or operation of the facility covered by the permit or regarding the conduct of the activity covered by the permit. (Minn. R. 7001.0150, subp. 3, item H)

1.26 Confidential Information. Except for data determined to be confidential according to Minn. Stat. Sec. 116.075, subd. 2, all reports required by this permit shall be available for public inspection. Effluent data shall not be considered confidential. To request the Agency maintain data as confidential, the Permittee must follow Minn. R. 7000.1300.

Noncompliance and Enforcement

1.27 Subject to Enforcement Action and Penalties. Noncompliance with a term or condition of this permit subjects the Permittee to penalties provided by federal and state law set forth in section 309 of the Clean Water Act; United States Code, title 33, section 1319, as amended; and in Minn. Stat. Sec. 115.071 and 116.072, including monetary penalties, imprisonment, or both. (Minn. R. 7001.1090, subp. 1, item B)

1.28 Criminal Activity. The Permittee may not knowingly make a false statement, representation, or certification in a record or other document submitted to the Agency. A person who falsifies a report or document submitted to the Agency, or tampers with, or knowingly renders inaccurate a monitoring device or method required to be maintained under this permit is subject to criminal and civil penalties provided by federal and state law. (Minn. R. 7001.0150, subp.3, item G., 7001.1090, subps. 1, items G and H and Minn. Stat. Sec. 609.671)

1.29 Noncompliance Defense. It shall not be a defense for the Permittee in an enforcement action that it would have been necessary to halt or reduce the permitted activity in order to maintain compliance with the conditions of this permit. (40 CFR 122.41(c))

Chapter 12. Total Facility Requirements

1. General Requirements

1.30 Effluent Violations. If sampling by the Permittee indicates a violation of any discharge limitation specified in this permit, the Permittee shall immediately make every effort to verify the violation by collecting additional samples, if appropriate, investigate the cause of the violation, and take action to prevent future violations. Violations that are determined to pose a threat to human health or a drinking water supply, or represent a significant risk to the environment shall be immediately reported to the Minnesota Department of Public Safety Duty Officer at 1(800)422-0798 (toll free) or (651)649-5451 (metro area). In addition, you may also contact the MPCA during business hours. Otherwise the violations and the results of any additional sampling shall be recorded on the next appropriate DMR or report.

1.31 Unauthorized Releases of Wastewater Prohibited. Except for conditions specifically described in Minn. R. 7001.1090, subp. 1, items J and K, all unauthorized bypasses, overflows, discharges, spills, or other releases of wastewater or materials to the environment, whether intentional or not, are prohibited. However, the MPCA will consider the Permittee's compliance with permit requirements, frequency of release, quantity, type, location, and other relevant factors when determining appropriate action. (40 CFR 122.41 and Minn. Stat. Sec 115.061)

1.32 Discovery of a release. Upon discovery of a release, the Permittee shall:

a. Take all reasonable steps to end the release as soon as possible and minimize any potential adverse impacts to human health or the environment resulting from the release. Where a release enters a water of the state, the Permittee shall remove the spilled/discharged material after contacting the Minnesota Department of Natural Resources (DNR) and Wetland Conservation Act authority for that area regarding any additional remediation of impacts.

b. Immediately notify the Minnesota Department of Public Safety Duty Officer at 1(800)422-0798 (toll free) or (651)649-5451 (metro area). In addition, you may also contact the MPCA during business hours.

c. Collect representative samples of the release. The Permittee shall sample the release for parameters of concern immediately following discovery of the release. Additional samples shall be collected at least two times per week for as long as the release continues. Where there is reason to believe a pollutant other than those limited in the permit is present, the Permittee shall sample for that pollutant. In addition, Fecal Coliform Bacteria samples shall be collected where it is determined by the Permittee that the release contains or may contain sewage. If needed, appropriate sampling shall be determined in consultation with the MPCA.

d. The sampling results shall be included with the next DMR or Report unless otherwise specified through consultation with MPCA staff.

Chapter 12. Total Facility Requirements

1. General Requirements

1.33 Upset Defense. In the event of temporary noncompliance by the Permittee with an applicable effluent limitation resulting from an upset at the Permittee's facility due to factors beyond the control of the Permittee, the Permittee has an affirmative defense to an enforcement action brought by the Agency as a result of the noncompliance if the Permittee demonstrates by a preponderance of competent evidence:

a. The specific cause of the upset;

b. That the upset was unintentional;

c. That the upset resulted from factors beyond the reasonable control of the Permittee and did not result from operational error, improperly designed treatment facilities, inadequate treatment facilities, lack of preventative maintenance, or increases in production which are beyond the design capability of the treatment facilities;

d. That at the time of the upset the facility was being properly operated;

e. That the Permittee properly notified the Commissioner of the upset in accordance with Minn. R. 7001.1090, subp. 1, item I; and

f. That the Permittee implemented the remedial measures required by Minn. R. 7001.0150, subp. 3, item J.

Operation and Maintenance

1.34 The Permittee shall at all times properly operate and maintain the facilities and systems of treatment and control, and the appurtenances related to them which are installed or used by the Permittee to achieve compliance with the conditions of the permit. Proper operation and maintenance includes effective performance, adequate funding, adequate operator staffing and training, and adequate laboratory and process controls, including appropriate quality assurance procedures. The Permittee shall install and maintain appropriate backup or auxiliary facilities if they are necessary to achieve compliance with the conditions of the permit and, for all permits other than hazardous waste facility permits, if these backup or auxiliary facilities are technically and economically feasible Minn. R. 7001.0150. subp. 3, item F.

1.35 In the event of a reduction or loss of effective treatment of wastewater at the facility, the Permittee shall control production or curtail its discharges to the extent necessary to maintain compliance with the terms and conditions of this permit. The Permittee shall continue this control or curtailment until the wastewater treatment facility has been restored or until an alternative method of treatment is provided. (Minn. R. 7001.1090, subp. 1, item C)

1.36 Solids Management. The Permittee shall properly store, transport, and dispose of biosolids, septage, sediments, residual solids, filter backwash, screenings, oil, grease, and other substances so that pollutants do not enter surface waters or ground waters of the state. Solids should be disposed of in accordance with local, state and federal requirements. (40 CFR 503 and Minn. R. 7041 and applicable federal and state solid waste rules)

1.37 Scheduled Maintenance. The Permittee shall schedule maintenance of the treatment works during non-critical water quality periods to prevent degradation of water quality, except where emergency maintenance is required to prevent a condition that would be detrimental to water quality or human health. (Minn. R. 7001.0150. subp. 3, item F and Minn. R. 7001.0150. subp. 2, item B)

1.38 Control Tests. In-plant control tests shall be conducted at a frequency adequate to ensure compliance with the conditions of this permit. (Minn. R. 7001.0150. subp. 3, item F and Minn. R. 7001.0150. subp. 2, item B)

Changes to the Facility or Permit

Chapter 12. Total Facility Requirements

1. General Requirements

1.39 Permit Modifications. No person required by statute or rule to obtain a permit may construct, install, modify, or operate the facility to be permitted, nor shall a person commence an activity for which a permit is required by statute or rule until the Agency has issued a written permit for the facility or activity. (Minn. R. 7001.0030)

Permittees that propose to make a change to the facility or discharge that requires a permit modification must follow Minn. R. 7001.0190. If the Permittee cannot determine whether a permit modification is needed, the Permittee must contact the MPCA prior to any action. It is recommended that the application for permit modification be submitted to the MPCA at least 180 days prior to the planned change.

1.40 Construction. No construction shall begin until the Permittee receives written approval of plans and specifications from the MPCA (Minn. Stat. Sec. 115.03(f)).

Plans, specifications and MPCA approval are not necessary when maintenance dictates the need for installation of new equipment, provided the equipment is the same design size and has the same design intent. For instance, a broken pipe, lift station pump, aerator, or blower can be replaced with the same design-sized equipment without MPCA approval.

If the proposed construction is not expressly authorized by this permit, it will require a permit modification. If the construction project requires an Environmental Assessment Worksheet under Minn. R. 4410, no construction shall begin until a negative declaration is issued and all approvals are received or implemented.

1.41 Report Changes. The Permittee shall give advance notice as soon as possible to the MPCA of any substantial changes in operational procedures, activities that may alter the nature or frequency of the discharge, and/or material factors that may affect compliance with the conditions of this permit.

1.42 Chemical Additives. The Permittee shall receive prior written approval from the MPCA before increasing the use of a chemical additive authorized by this permit, or using a chemical additive not authorized by this permit, in quantities or concentrations that have the potential to change the characteristics, nature and/or quality of the discharge.

The Permittee shall request approval for an increased or new use of a chemical additive at least 60 days, or as soon as possible, before the proposed increased or new use.

This written request shall include at least the following information for the proposed additive:

a. The process for which the additive will be used;

b. Material Safety Data Sheet (MSDS) which shall include aquatic toxicity, human health, and environmental fate information for the proposed additive;

c. A complete product use and instruction label;

d. The commercial and chemical names and Chemical Abstract Survey (CAS) number for all ingredients in the additive (If the MSDS does not include information on chemical composition, including percentages for each ingredient totaling to 100%, the Permittee shall contact the supplier to have this information provided); and

e. The proposed method of application, application frequency, concentration, and daily average and maximum rates of use.

Upon review of the information submitted regarding the proposed chemical additive, the MPCA may require that additional information be submitted for consideration. Also, this permit may be modified to restrict the use or discharge of a chemical additive and include additional influent and effluent monitoring requirements. (Minn. R. 7001.0170)

Chapter 12. Total Facility Requirements

1. General Requirements

1.43 The Permittee shall request approval for an increased or new use of a chemical additive at least 60 days, or as soon as possible, before the proposed increased or new use.

1.44 This written request shall include at least the following information for the proposed additive:

a. The process for which the additive will be used;

b. Material Safety Data Sheet (MSDS) which shall include aquatic toxicity, human health, and environmental fate information for the proposed additive;

c. A complete product use and instruction label;

d. The commercial and chemical names and Chemical Abstract Survey (CAS) number for all ingredients in the additive (If the MSDS does not include information on chemical composition, including percentages for each ingredient totaling to 100%, the Permittee shall contact the supplier to have this information provided); and

e. The proposed method of application, application frequency, concentration, and daily average and maximum rates of use.

1.45 Upon review of the information submitted regarding the proposed chemical additive, the MPCA may require that additional information be submitted for consideration. Also, this permit may be modified to restrict the use or discharge of a chemical additive and include additional influent and effluent monitoring requirements.

1.46 MPCA Initiated Permit Modification, Suspension, or Revocation. The MPCA may modify or revoke and reissue this permit pursuant to Minn. R. 7001.0170. The MPCA may revoke without reissuance this permit pursuant to Minn. R. 7001.0180.

1.47 TMDL Impacts. Facilities that discharge to an impaired surface water, or to a watershed or drainage basin that contains impaired waters, may be required, at some future date, to comply with additional permits, or permit requirements, based on the conclusions of any applicable US EPA approved Total Maximum Daily Load (TMDL) studies and their associated implementation plans.

1.48 Permit Transfer. The permit is not transferable to any person without the express written approval of the Agency after compliance with the requirements of Minn. R. 7001.0190. A person to whom the permit has been transferred shall comply with the conditions of the permit. (Minn. R., 7001.0150, subp. 3, item N)

1.49 Facility Closure. The Permittee is responsible for closure and post-closure care of the facility. The Permittee shall notify the MPCA of a significant reduction or cessation of the activities described in this permit at least 180 days before the reduction or cessation. The MPCA may require the Permittee to provide to the MPCA a facility Closure Plan for approval.

Facility closure that could result in a potential long-term water quality concern, such as the ongoing discharge of wastewater to surface or ground water, may require a permit modification or reissuance.

The MPCA may require the Permittee to establish and maintain financial assurance to ensure performance of certain obligations under this permit, including closure, post-closure care and remedial action at the facility. If financial assurance is required, the amount and type of financial assurance, and proposed modifications to previously MPCA-approved financial assurance, shall be approved by the MPCA.

Chapter 12. Total Facility Requirements

1. General Requirements

1.50 Permit Reissuance. If the Permittee desires to continue permit coverage beyond the date of permit expiration, the Permittee shall submit an application for reissuance at least 180 days before permit expiration. If the Permittee does not intend to continue the activities authorized by this permit after the expiration date of this permit, the Permittee shall notify the MPCA in writing at least 180 days before permit expiration.

If the Permittee has submitted a timely application for permit reissuance, the Permittee may continue to conduct the activities authorized by this permit, in compliance with the requirements of this permit, until the MPCA takes final action on the application, unless the MPCA determines any of the following (Minn. R. 7001.0040 and 7001.0160):

a. The Permittee is not in substantial compliance with the requirements of this permit, or with a stipulation agreement or compliance schedule designed to bring the Permittee into compliance with this permit;

b. The MPCA, as a result of an action or failure to act by the Permittee, has been unable to take final action on the application on or before the expiration date of the permit;

c. The Permittee has submitted an application with major deficiencies or has failed to properly supplement the application in a timely manner after being informed of deficiencies.

APPENDIX D

Parameter	Units	Date	Leachate Field Blank	Leachate Trip Blank	Treated Leachate	Untreated Leachate
1,1,1,2-Tetrachloroethane	ug / L	3/25/2009	< 1			< 10
1,1,1,2-Tetrachloroethane	ug / L	5/1/2009	< 1		< 5	
1,1,1,2-Tetrachloroethane	ug / L	6/30/2009	< 1		< 5	< 10
1,1,1,2-Tetrachloroethane	ug / L	7/29/2009	< 1		< 5	< 5
1,1,1,2-Tetrachloroethane	ug / L	9/2/2009	< 1		< 5	
1,1,1,2-Tetrachloroethane	ug / L	12/1/2009				<5
1,1,1,2-Tetrachloroethane	ug / L	9/14/2010	<0.5	<0.5	<2.5	
1,1,1,2-Tetrachloroethane	ug / L	9/2/2010	<0.5	<0.5	<2.5	
1,1,1,2-Tetrachloroethane	ug / L	10/15/2010	<0.5	<0.5	<2.5	<2.5
1,1,1,2-Tetrachloroethane	ug / L	4/26/2010	<0.5	<0.5	<2.5	
1,1,1,2-Tetrachloroethane	ug / L	5/17/2010	<0.5	<0.5	<2.5	
1,1,1,2-Tetrachloroethane	ug / L	3/18/2010	<0.5	<0.5		<5
1,1,1,2-Tetrachloroethane	ug / L	6/29/2010	<0.5	<0.5	<2.5	<2.5
1,1,1,2-Tetrachloroethane	ug / L	7/27/2010	<0.5	<0.5	<2.5	<2.5
1,1,1,2-Tetrachloroethane	ug / L	5/11/2011		<0.5		<2.5
1,1,1,2-Tetrachloroethane	ug / L	6/30/2011		<0.5		<2.5
1,1,1,2-Tetrachloroethane	ug / L	7/28/2011		<0.5		<2.5
1,1,1,2-Tetrachloroethane	ug / L	9/1/2011		<0.5		<2.5
1,1,1,2-Tetrachloroethane	ug / L	10/19/2011		<0.5		<2.5
1,1,1,2-Tetrachloroethane	ug / L	3/13/2012	<5	<1		<5
1,1,1,2-Tetrachloroethane	ug / L	4/3/2012	<1	<1		<5
1,1,1,2-Tetrachloroethane	ug / L	5/16/2012	<1	<1	<1	
1,1,1,2-Tetrachloroethane	ug / L	6/15/2012	<1	<1	<1	
1,1,1,2-Tetrachloroethane	ug / L	7/16/2012	<1	<1	<1	<5
1,1,1,2-Tetrachloroethane	ug / L	8/9/2012	<1	<1	<1	
1,1,1,2-Tetrachloroethane	ug / L	9/13/2012	<1	<1	<1	
1,1,1,2-Tetrachloroethane	ug / L	10/2/2012	<1	<1	<1	<5
1,1,1-Trichloroethane	ug / L	3/25/2009	< 1			< 10
1,1,1-Trichloroethane	ug / L	5/1/2009	< 1		< 5	
1,1,1-Trichloroethane	ug / L	6/30/2009	< 1		< 5	< 10
1,1,1-Trichloroethane	ug / L	7/29/2009	< 1		< 5	< 5
1,1,1-Trichloroethane	ug / L	9/2/2009	< 1		< 5	
1,1,1-Trichloroethane	ug / L	12/1/2009				<5
1,1,1-Trichloroethane	ug / L	9/14/2010	<1	<1	<5	
1,1,1-Trichloroethane	ug / L	9/2/2010	<1	<1	<5	
1,1,1-Trichloroethane	ug / L	10/15/2010	<1	<1	<5	<5
1,1,1-Trichloroethane	ug / L	4/26/2010	<1	<1	<5	
1,1,1-Trichloroethane	ug / L	5/17/2010	<1	<1	<5	
1,1,1-Trichloroethane	ug / L	3/18/2010	<1	<1		<5
1,1,1-Trichloroethane	ug / L	6/29/2010	<1	<1	<5	<5
1,1,1-Trichloroethane	ug / L	7/27/2010	<1	<1	<5	<5
1,1,1-Trichloroethane	ug / L	5/11/2011		<1	<5	<5
1,1,1-Trichloroethane	ug / L	6/30/2011		<1	<5	<5
1,1,1-Trichloroethane	ug / L	7/28/2011		<1	<5	<5
1,1,1-Trichloroethane	ug / L	9/1/2011		<1	<5	<5
1,1,1-Trichloroethane	ug / L	10/19/2011		<1	<5	<5
1,1,1-Trichloroethane	ug / L	3/13/2012	<5	<1		<5
1,1,1-Trichloroethane	ug / L	4/3/2012	<1	<1		<5
1,1,1-Trichloroethane	ug / L	5/16/2012	<1	<1	<1	
1,1,1-Trichloroethane	ug / L	6/15/2012	<1	<1	<1	
1,1,1-Trichloroethane	ug / L	7/16/2012	<1	<1	<1	<5
1,1,1-Trichloroethane	ug / L	8/9/2012	<1	<1	<1	
1,1,1-Trichloroethane	ug / L	9/13/2012	<1	<1	<1	
1,1,1-Trichloroethane	ug / L	10/2/2012	<1	<1	<1	<5
1,1,2,2-Tetrachloroethane	ug / L	3/25/2009	< 1			< 10
1,1,2,2-Tetrachloroethane	ug / L	5/1/2009	< 1		< 5	
1,1,2,2-Tetrachloroethane	ug / L	6/30/2009	< 1		< 5	< 10
1,1,2,2-Tetrachloroethane	ug / L	7/29/2009	< 1		< 5	< 5
1,1,2,2-Tetrachloroethane	ug / L	9/2/2009	< 1		< 5	
1,1,2,2-Tetrachloroethane	ug / L	12/1/2009				<5
1,1,2,2-Tetrachloroethane	ug / L	9/14/2010	<0.5	<0.5	<2.5	
1,1,2,2-Tetrachloroethane	ug / L	9/2/2010	<0.5	<0.5	<2.5	
1,1,2,2-Tetrachloroethane	ug / L	10/15/2010	<0.5	<0.5	<2.5	<2.5
1,1,2,2-Tetrachloroethane	ug / L	4/26/2010	<0.5	<0.5	<2.5	
1,1,2,2-Tetrachloroethane	ug / L	5/17/2010	<0.5	<0.5	<2.5	
1,1,2,2-Tetrachloroethane	ug / L	3/18/2010	<0.5	<0.5		<5
1,1,2,2-Tetrachloroethane	ug / L	6/29/2010	<0.5	<0.5	<2.5	<2.5
1,1,2,2-Tetrachloroethane	ug / L	7/27/2010	<0.5	<0.5	<2.5	<2.5

Parameter	Units	Date	Leachate Field Blank	Leachate Trip Blank	Treated Leachate	Untreated Leachate
1,1,2,2-Tetrachloroethane	ug / L	5/11/2011		<0.5		<2.5
1,1,2,2-Tetrachloroethane	ug / L	6/30/2011		<0.5		<2.5
1,1,2,2-Tetrachloroethane	ug / L	7/28/2011		<0.5		<2.5
1,1,2,2-Tetrachloroethane	ug / L	9/1/2011		<0.5		<2.5
1,1,2,2-Tetrachloroethane	ug / L	10/19/2011		<0.5		<2.5
1,1,2,2-Tetrachloroethane	ug / L	3/13/2012	<5	<1		<5
1,1,2,2-Tetrachloroethane	ug / L	4/3/2012	<1	<1		<5
1,1,2,2-Tetrachloroethane	ug / L	5/16/2012	<1	<1	<1	
1,1,2,2-Tetrachloroethane	ug / L	6/15/2012	<1	<1	<1	
1,1,2,2-Tetrachloroethane	ug / L	7/16/2012	<1	<1	<1	<5
1,1,2,2-Tetrachloroethane	ug / L	8/9/2012	<1	<1	<1	
1,1,2,2-Tetrachloroethane	ug / L	9/13/2012	<1	<1	<1	
1,1,2,2-Tetrachloroethane	ug / L	10/2/2012	<1	<1	<1	<5
1,1,2-Trichloroethane	ug / L	3/25/2009	< 1			< 10
1,1,2-Trichloroethane	ug / L	5/1/2009	< 1		< 5	
1,1,2-Trichloroethane	ug / L	6/30/2009	< 1		< 5	< 10
1,1,2-Trichloroethane	ug / L	7/29/2009	< 1		< 5	< 5
1,1,2-Trichloroethane	ug / L	9/2/2009	< 1		< 5	
1,1,2-Trichloroethane	ug / L	12/1/2009				<5
1,1,2-Trichloroethane	ug / L	9/14/2010	<1	<1	<5	
1,1,2-Trichloroethane	ug / L	9/2/2010	<1	<1	<5	
1,1,2-Trichloroethane	ug / L	10/15/2010	<1	<1	<5	<5
1,1,2-Trichloroethane	ug / L	4/26/2010	<1	<1	<5	
1,1,2-Trichloroethane	ug / L	5/17/2010	<1	<1	<5	
1,1,2-Trichloroethane	ug / L	3/18/2010	<1	<1		<5
1,1,2-Trichloroethane	ug / L	6/29/2010	<1	<1	<5	<5
1,1,2-Trichloroethane	ug / L	7/27/2010	<1	<1	<5	<5
1,1,2-Trichloroethane	ug / L	5/11/2011		<1		<5
1,1,2-Trichloroethane	ug / L	6/30/2011		<1		<5
1,1,2-Trichloroethane	ug / L	7/28/2011		<1		<5
1,1,2-Trichloroethane	ug / L	9/1/2011		<1		<5
1,1,2-Trichloroethane	ug / L	10/19/2011		<1		<5
1,1,2-Trichloroethane	ug / L	3/13/2012	<5	<1		<5
1,1,2-Trichloroethane	ug / L	4/3/2012	<1	<1		<5
1,1,2-Trichloroethane	ug / L	5/16/2012	<1	<1	<1	
1,1,2-Trichloroethane	ug / L	6/15/2012	<1	<1	<1	
1,1,2-Trichloroethane	ug / L	7/16/2012	<1	<1	<1	<5
1,1,2-Trichloroethane	ug / L	8/9/2012	<1	<1	<1	
1,1,2-Trichloroethane	ug / L	9/13/2012	<1	<1	<1	
1,1,2-Trichloroethane	ug / L	10/2/2012	<1	<1	<1	<5
1,1,2-Trichlorotrifluoroethane	ug / L	3/25/2009	< 1			< 10
1,1,2-Trichlorotrifluoroethane	ug / L	5/1/2009	< 1		< 5	
1,1,2-Trichlorotrifluoroethane	ug / L	6/30/2009	< 1		< 5	< 10
1,1,2-Trichlorotrifluoroethane	ug / L	7/29/2009	< 1		< 5	< 5
1,1,2-Trichlorotrifluoroethane	ug / L	9/2/2009	< 1		< 5	
1,1,2-Trichlorotrifluoroethane	ug / L	12/1/2009				<5
1,1,2-Trichlorotrifluoroethane	ug / L	9/14/2010	<1	<1	<5	
1,1,2-Trichlorotrifluoroethane	ug / L	9/2/2010	<1	<1	<5	
1,1,2-Trichlorotrifluoroethane	ug / L	10/15/2010	<1	<1	<5	<5
1,1,2-Trichlorotrifluoroethane	ug / L	4/26/2010	<1	<1	<5	
1,1,2-Trichlorotrifluoroethane	ug / L	5/17/2010	<1	<1	<5	
1,1,2-Trichlorotrifluoroethane	ug / L	3/18/2010	<1	<1		<5
1,1,2-Trichlorotrifluoroethane	ug / L	6/29/2010	<1	<1	<5	<5
1,1,2-Trichlorotrifluoroethane	ug / L	7/27/2010	<1	<1	<5	<5
1,1,2-Trichlorotrifluoroethane	ug / L	5/11/2011		<1		<5
1,1,2-Trichlorotrifluoroethane	ug / L	6/30/2011		<1		<5
1,1,2-Trichlorotrifluoroethane	ug / L	7/28/2011		<1		<5
1,1,2-Trichlorotrifluoroethane	ug / L	9/1/2011		<1		<5
1,1,2-Trichlorotrifluoroethane	ug / L	10/19/2011		<1		<5
1,1,2-Trichlorotrifluoroethane	ug / L	3/13/2012	<5	<1		<5
1,1,2-Trichlorotrifluoroethane	ug / L	4/3/2012	<1	<1		<5
1,1,2-Trichlorotrifluoroethane	ug / L	5/16/2012	<1	<1	<1	
1,1,2-Trichlorotrifluoroethane	ug / L	6/15/2012	<1	<1	<1	
1,1,2-Trichlorotrifluoroethane	ug / L	7/16/2012	<1	<1	<1	<5
1,1,2-Trichlorotrifluoroethane	ug / L	8/9/2012	<1	<1	<1	
1,1,2-Trichlorotrifluoroethane	ug / L	9/13/2012	<4	<4	<4	
1,1,2-Trichlorotrifluoroethane	ug / L	10/2/2012	<1	<1	<1	<5

Parameter	Units	Date	Leachate Field Blank	Leachate Trip Blank	Treated Leachate	Untreated Leachate
1,1-Dichloroethane	ug / L	3/25/2009	< 1			< 10
1,1-Dichloroethane	ug / L	5/1/2009	< 1		< 5	
1,1-Dichloroethane	ug / L	6/30/2009	< 1		< 5	< 10
1,1-Dichloroethane	ug / L	7/29/2009	< 1		< 5	< 5
1,1-Dichloroethane	ug / L	9/2/2009	< 1		< 5	
1,1-Dichloroethane	ug / L	12/1/2009				<5
1,1-Dichloroethane	ug / L	9/14/2010	<1	<1	<5	
1,1-Dichloroethane	ug / L	9/2/2010	<1	<1	<5	
1,1-Dichloroethane	ug / L	10/15/2010	<1	<1	<5	<5
1,1-Dichloroethane	ug / L	4/26/2010	<1	<1	<5	
1,1-Dichloroethane	ug / L	5/17/2010	<1	<1	<5	
1,1-Dichloroethane	ug / L	3/18/2010	<1	<1		<5
1,1-Dichloroethane	ug / L	6/29/2010	<1	<1	<5	<5
1,1-Dichloroethane	ug / L	7/27/2010	<1	<1	<5	<5
1,1-Dichloroethane	ug / L	5/11/2011		<1		<5
1,1-Dichloroethane	ug / L	6/30/2011		<1		<5
1,1-Dichloroethane	ug / L	7/28/2011		<1		<5
1,1-Dichloroethane	ug / L	9/1/2011		<1		<5
1,1-Dichloroethane	ug / L	10/19/2011		<1		<5
1,1-Dichloroethane	ug / L	3/13/2012	<5	<1		<5
1,1-Dichloroethane	ug / L	4/3/2012	<1	<1		<5
1,1-Dichloroethane	ug / L	5/16/2012	<1	<1	<1	
1,1-Dichloroethane	ug / L	6/15/2012	<1	<1	<1	
1,1-Dichloroethane	ug / L	7/16/2012	<1	<1	<1	<5
1,1-Dichloroethane	ug / L	8/9/2012	<1	<1	<1	
1,1-Dichloroethane	ug / L	9/13/2012	<1	<1	<1	
1,1-Dichloroethane	ug / L	10/2/2012	<1	<1	<1	<5
1,1-Dichloroethylene	ug / L	3/25/2009	< 1			< 10
1,1-Dichloroethylene	ug / L	5/1/2009	< 1		< 5	
1,1-Dichloroethylene	ug / L	6/30/2009	< 1		< 5	< 10
1,1-Dichloroethylene	ug / L	7/29/2009	< 1		< 5	< 5
1,1-Dichloroethylene	ug / L	9/2/2009	< 1		< 5	
1,1-Dichloroethylene	ug / L	12/1/2009				<5
1,1-Dichloroethylene	ug / L	9/14/2010	<1	<1	<5	
1,1-Dichloroethylene	ug / L	9/2/2010	<1	<1	<5	
1,1-Dichloroethylene	ug / L	10/15/2010	<1	<1	<5	<5
1,1-Dichloroethylene	ug / L	4/26/2010	<1	<1	<5	
1,1-Dichloroethylene	ug / L	5/17/2010	<1	<1	<5	
1,1-Dichloroethylene	ug / L	3/18/2010	<1	<1		<5
1,1-Dichloroethylene	ug / L	6/29/2010	<1	<1	<5	<5
1,1-Dichloroethylene	ug / L	7/27/2010	<1	<1	<5	<5
1,1-Dichloroethylene	ug / L	5/11/2011		<1		<5
1,1-Dichloroethylene	ug / L	6/30/2011		<1		<5
1,1-Dichloroethylene	ug / L	7/28/2011		<1		<5
1,1-Dichloroethylene	ug / L	9/1/2011		<1		<5
1,1-Dichloroethylene	ug / L	10/19/2011		<1		<5
1,1-Dichloroethene	ug / L	3/13/2012	<5	<1		<5
1,1-Dichloroethene	ug / L	4/3/2012	<1	<1		<5
1,1-Dichloroethene	ug / L	5/16/2012	<1	<1	<1	
1,1-Dichloroethene	ug / L	6/15/2012	<1	<1	<1	
1,1-Dichloroethene	ug / L	7/16/2012	<1	<1	<1	<5
1,1-Dichloroethene	ug / L	8/9/2012	<1	<1	<1	
1,1-Dichloroethene	ug / L	9/13/2012	<1	<1	<1	
1,1-Dichloroethene	ug / L	10/2/2012	<1	<1	<1	<5
1,1-Dichloropropene	ug / L	3/25/2009	< 1			< 10
1,1-Dichloropropene	ug / L	5/1/2009	< 1		< 5	
1,1-Dichloropropene	ug / L	6/30/2009	< 1		< 5	< 10
1,1-Dichloropropene	ug / L	7/29/2009	< 1		< 5	< 5
1,1-Dichloropropene	ug / L	9/2/2009	< 1		< 5	
1,1-Dichloropropene	ug / L	12/1/2009				<5
1,1-Dichloropropene	ug / L	9/14/2010	<0.5	<0.5	<2.5	
1,1-Dichloropropene	ug / L	9/2/2010	<0.5	<0.5	<2.5	
1,1-Dichloropropene	ug / L	10/15/2010	<0.5	<0.5	<2.5	<2.5
1,1-Dichloropropene	ug / L	4/26/2010	<0.5	<0.5	<2.5	
1,1-Dichloropropene	ug / L	5/17/2010	<0.5	<0.5	<2.5	
1,1-Dichloropropene	ug / L	3/18/2010	<0.5	<0.5		<5
1,1-Dichloropropene	ug / L	6/29/2010	<0.5	<0.5	<2.5	<2.5
1,1-Dichloropropene	ug / L	7/27/2010	<0.5	<0.5	<2.5	<2.5

Parameter	Units	Date	Leachate Field Blank	Leachate Trip Blank	Treated Leachate	Untreated Leachate
1,1-Dichloropropene	ug / L	5/11/2011		<0.5		<2.5
1,1-Dichloropropene	ug / L	6/30/2011		<0.5		<2.5
1,1-Dichloropropene	ug / L	7/28/2011		<0.5		<2.5
1,1-Dichloropropene	ug / L	9/1/2011		<0.5		<2.5
1,1-Dichloropropene	ug / L	10/19/2011		<0.5		<2.5
1,1-Dichloropropene	ug / L	3/13/2012	<5	<1		<5
1,1-Dichloropropene	ug / L	4/3/2012	<1	<1		<5
1,1-Dichloropropene	ug / L	5/16/2012	<1	<1	<1	
1,1-Dichloropropene	ug / L	6/15/2012	<1	<1	<1	
1,1-Dichloropropene	ug / L	7/16/2012	<1	<1	<1	<5
1,1-Dichloropropene	ug / L	8/9/2012	<1	<1	<1	
1,1-Dichloropropene	ug / L	9/13/2012	<1	<1	<1	
1,1-Dichloropropene	ug / L	10/2/2012	<1	<1	<1	<5
1,2,3-Trichlorobenzene	ug / L	3/25/2009	< 2			< 20
1,2,3-Trichlorobenzene	ug / L	5/1/2009	< 2		< 10	
1,2,3-Trichlorobenzene	ug / L	6/30/2009	< 2		< 10	< 20
1,2,3-Trichlorobenzene	ug / L	7/29/2009	< 2		< 10	< 10
1,2,3-Trichlorobenzene	ug / L	9/2/2009	< 2		< 10	
1,2,3-Trichlorobenzene	ug / L	12/1/2009				<10
1,2,3-Trichlorobenzene	ug / L	9/14/2010	<1	<1	<5	
1,2,3-Trichlorobenzene	ug / L	9/2/2010	<1	<1	<5	
1,2,3-Trichlorobenzene	ug / L	10/15/2010	<1	<1	<5	<5
1,2,3-Trichlorobenzene	ug / L	4/26/2010	<1	<1	<5	
1,2,3-Trichlorobenzene	ug / L	5/17/2010	<1	<1	<5	
1,2,3-Trichlorobenzene	ug / L	3/18/2010	<1	<1		<10
1,2,3-Trichlorobenzene	ug / L	6/29/2010	<1	<1	<5	<5
1,2,3-Trichlorobenzene	ug / L	7/27/2010	<1	<1	<5	<5
1,2,3-Trichlorobenzene	ug / L	5/11/2011		<1		<5
1,2,3-Trichlorobenzene	ug / L	6/30/2011		<1		<5
1,2,3-Trichlorobenzene	ug / L	7/28/2011		<1		<5
1,2,3-Trichlorobenzene	ug / L	9/1/2011		<1		<5
1,2,3-Trichlorobenzene	ug / L	10/19/2011		<1		<5
1,2,3-Trichlorobenzene	ug / L	3/13/2012	<5	<1		<5
1,2,3-Trichlorobenzene	ug / L	4/3/2012	<1	<1		<5
1,2,3-Trichlorobenzene	ug / L	5/16/2012	<1	<1	<1	
1,2,3-Trichlorobenzene	ug / L	6/15/2012	<1	<1	<1	
1,2,3-Trichlorobenzene	ug / L	7/16/2012	<1	<1	<1	<5
1,2,3-Trichlorobenzene	ug / L	8/9/2012	<1	<1	<1	
1,2,3-Trichlorobenzene	ug / L	9/13/2012	<1	<1	<1	
1,2,3-Trichlorobenzene	ug / L	10/2/2012	<1	<1	<1	<5
1,2,3-Trichloropropane	ug / L	3/25/2009	< 2			< 20
1,2,3-Trichloropropane	ug / L	5/1/2009	< 2		< 10	
1,2,3-Trichloropropane	ug / L	6/30/2009	< 2		< 10	< 20
1,2,3-Trichloropropane	ug / L	7/29/2009	< 2		< 10	< 10
1,2,3-Trichloropropane	ug / L	9/2/2009	< 2		< 10	
1,2,3-Trichloropropane	ug / L	12/1/2009				<10
1,2,3-Trichloropropane	ug / L	9/14/2010	<1	<1	<5	
1,2,3-Trichloropropane	ug / L	9/2/2010	<1	<1	<5	
1,2,3-Trichloropropane	ug / L	10/15/2010	<1	<1	<5	<5
1,2,3-Trichloropropane	ug / L	4/26/2010	<1	<1	<5	
1,2,3-Trichloropropane	ug / L	5/17/2010	<1	<1	<5	
1,2,3-Trichloropropane	ug / L	3/18/2010	<1	<1		<10
1,2,3-Trichloropropane	ug / L	6/29/2010	<1	<1	<5	<5
1,2,3-Trichloropropane	ug / L	7/27/2010	<1	<1	<5	<5
1,2,3-Trichloropropane	ug / L	5/11/2011		<1		<5
1,2,3-Trichloropropane	ug / L	6/30/2011		<1		<5
1,2,3-Trichloropropane	ug / L	7/28/2011		<1		<5
1,2,3-Trichloropropane	ug / L	9/1/2011		<1		<5
1,2,3-Trichloropropane	ug / L	10/19/2011		<1		<5
1,2,3-Trichloropropane	ug / L	3/13/2012	<20	<4		<20
1,2,3-Trichloropropane	ug / L	4/3/2012	<4	<4		<20
1,2,3-Trichloropropane	ug / L	5/16/2012	<4	<4	<4	
1,2,3-Trichloropropane	ug / L	6/15/2012	<4	<4	<4	
1,2,3-Trichloropropane	ug / L	7/16/2012	<4	<4	<4	<20
1,2,3-Trichloropropane	ug / L	8/9/2012	<4	<4	<4	
1,2,3-Trichloropropane	ug / L	9/13/2012	<4	<4	<4	
1,2,3-Trichloropropane	ug / L	10/2/2012	<4	<4	<4	<20

Parameter	Units	Date	Leachate Field Blank	Leachate Trip Blank	Treated Leachate	Untreated Leachate
1,2,4-Trichlorobenzene	ug / L	3/25/2009	< 2			< 20
1,2,4-Trichlorobenzene	ug / L	5/1/2009	< 2		< 10	
1,2,4-Trichlorobenzene	ug / L	6/30/2009	< 2		< 10	< 20
1,2,4-Trichlorobenzene	ug / L	7/29/2009	< 2		< 10	< 10
1,2,4-Trichlorobenzene	ug / L	9/2/2009	< 2		< 10	
1,2,4-Trichlorobenzene	ug / L	12/1/2009				<10
1,2,4-Trichlorobenzene	ug / L	9/14/2010	<1	<1	<5	
1,2,4-Trichlorobenzene	ug / L	9/2/2010	<1	<1	<5	
1,2,4-Trichlorobenzene	ug / L	10/15/2010	<1	<1	<5	<5
1,2,4-Trichlorobenzene	ug / L	4/26/2010	<1	<1	<5	
1,2,4-Trichlorobenzene	ug / L	5/17/2010	<1	<1	<5	
1,2,4-Trichlorobenzene	ug / L	3/18/2010	<1	<1		<10
1,2,4-Trichlorobenzene	ug / L	6/29/2010	<1	<1	<5	<5
1,2,4-Trichlorobenzene	ug / L	7/27/2010	<1	<1	<5	<5
1,2,4-Trichlorobenzene	ug / L	5/11/2011		<1		<5
1,2,4-Trichlorobenzene	ug / L	6/30/2011		<1		<5
1,2,4-Trichlorobenzene	ug / L	7/28/2011		<1		<5
1,2,4-Trichlorobenzene	ug / L	9/1/2011		<1		<5
1,2,4-Trichlorobenzene	ug / L	10/19/2011		<1		<5
1,2,4-Trichlorobenzene	ug / L	3/13/2012	<5	<1		<5
1,2,4-Trichlorobenzene	ug / L	4/3/2012	<1	<1		<5
1,2,4-Trichlorobenzene	ug / L	5/16/2012	<1	<1	<1	
1,2,4-Trichlorobenzene	ug / L	6/15/2012	<1	<1	<1	
1,2,4-Trichlorobenzene	ug / L	7/16/2012	<1	<1	<1	<5
1,2,4-Trichlorobenzene	ug / L	8/9/2012	<1	<1	<1	
1,2,4-Trichlorobenzene	ug / L	9/13/2012	<1	<1	<1	
1,2,4-Trichlorobenzene	ug / L	10/2/2012	<1	<1	<1	<5
1,2,4-Trimethylbenzene	ug / L	3/25/2009	< 1			< 10
1,2,4-Trimethylbenzene	ug / L	5/1/2009	< 1		7.5	
1,2,4-Trimethylbenzene	ug / L	6/30/2009	< 1		< 5	14
1,2,4-Trimethylbenzene	ug / L	7/29/2009	< 1		< 5	12
1,2,4-Trimethylbenzene	ug / L	9/2/2009	< 1		< 5	
1,2,4-Trimethylbenzene	ug / L	12/1/2009				9.5
1,2,4-Trimethylbenzene	ug / L	9/14/2010	<1	<1	<5	
1,2,4-Trimethylbenzene	ug / L	9/2/2010	<1	<1	<5	
1,2,4-Trimethylbenzene	ug / L	10/15/2010	<1	<1	<5	<5
1,2,4-Trimethylbenzene	ug / L	4/26/2010	<1	<1	<5	
1,2,4-Trimethylbenzene	ug / L	5/17/2010	<1	<1	<5	
1,2,4-Trimethylbenzene	ug / L	3/18/2010	<1	<1		11
1,2,4-Trimethylbenzene	ug / L	6/29/2010	<1	<1	<5	11
1,2,4-Trimethylbenzene	ug / L	7/27/2010	<1	<1	<5	8
1,2,4-Trimethylbenzene	ug / L	5/11/2011		<1		7
1,2,4-Trimethylbenzene	ug / L	6/30/2011		<1		6.7
1,2,4-Trimethylbenzene	ug / L	7/28/2011		<1		<5
1,2,4-Trimethylbenzene	ug / L	9/1/2011		<1		<5
1,2,4-Trimethylbenzene	ug / L	10/19/2011		<1		<5
1,2,4-Trimethylbenzene	ug / L	3/13/2012	50.9	<1		46.6
1,2,4-Trimethylbenzene	ug / L	4/3/2012	<1	<1		48.6
1,2,4-Trimethylbenzene	ug / L	5/16/2012	<1	<1	<1	
1,2,4-Trimethylbenzene	ug / L	6/15/2012	<1	<1	<1	
1,2,4-Trimethylbenzene	ug / L	7/16/2012	<1	<1	<1	<5
1,2,4-Trimethylbenzene	ug / L	8/9/2012	<1	<1	<1	
1,2,4-Trimethylbenzene	ug / L	9/13/2012	<1	<1	<1	
1,2,4-Trimethylbenzene	ug / L	10/2/2012	<1	<1	<1	5.3
1,2-Dibromo-3-chloropropane	ug / L	3/25/2009	< 2			< 20
1,2-Dibromo-3-chloropropane	ug / L	5/1/2009	< 2		< 10	
1,2-Dibromo-3-chloropropane	ug / L	6/30/2009	< 2		< 10	< 20
1,2-Dibromo-3-chloropropane	ug / L	7/29/2009	< 2		< 10	< 10
1,2-Dibromo-3-chloropropane	ug / L	9/2/2009	< 2		< 10	
1,2-Dibromo-3-chloropropane	ug / L	12/1/2009				<10
1,2-Dibromo-3-chloropropane	ug / L	9/14/2010	<1	<1	<5	
1,2-Dibromo-3-chloropropane	ug / L	9/2/2010	<1	<1	<5	
1,2-Dibromo-3-chloropropane	ug / L	10/15/2010	<1	<1	<5	<5
1,2-Dibromo-3-chloropropane	ug / L	4/26/2010	<1	<1	<5	
1,2-Dibromo-3-chloropropane	ug / L	5/17/2010	<1	<1	<5	
1,2-Dibromo-3-chloropropane	ug / L	3/18/2010	<1	<1		<10
1,2-Dibromo-3-chloropropane	ug / L	6/29/2010	<1	<1	<5	<5
1,2-Dibromo-3-chloropropane	ug / L	7/27/2010	<1	<1	<5	<5

Parameter	Units	Date	Leachate Field Blank	Leachate Trip Blank	Treated Leachate	Untreated Leachate
1,2-Dibromo-3-chloropropane	ug / L	5/11/2011		<1		<5
1,2-Dibromo-3-chloropropane	ug / L	6/30/2011		<1		<5
1,2-Dibromo-3-chloropropane	ug / L	7/28/2011		<1		<5
1,2-Dibromo-3-chloropropane	ug / L	9/1/2011		<1		<5
1,2-Dibromo-3-chloropropane	ug / L	10/19/2011		<1		<5
1,2-Dibromo-3-chloropropane	ug / L	3/13/2012	<20	<4		<20
1,2-Dibromo-3-chloropropane	ug / L	4/3/2012	<4	<4		<20
1,2-Dibromo-3-chloropropane	ug / L	5/16/2012	<4	<4	<4	
1,2-Dibromo-3-chloropropane	ug / L	6/15/2012	<4	<4	<4	
1,2-Dibromo-3-chloropropane	ug / L	7/16/2012	<4	<4	<4	<20
1,2-Dibromo-3-chloropropane	ug / L	8/9/2012	<4	<4	<4	
1,2-Dibromo-3-chloropropane	ug / L	9/13/2012	<4	<4	<4	
1,2-Dibromo-3-chloropropane	ug / L	10/2/2012	<4	<4	<4	<20
1,2-Dibromoethane	ug / L	3/25/2009	< 1			< 10
1,2-Dibromoethane	ug / L	5/1/2009	< 1		< 5	
1,2-Dibromoethane	ug / L	6/30/2009	< 1		< 5	< 10
1,2-Dibromoethane	ug / L	7/29/2009	< 1		< 5	< 5
1,2-Dibromoethane	ug / L	9/2/2009	< 1		< 5	
1,2-Dibromoethane	ug / L	12/1/2009				<5
1,2-Dibromoethane	ug / L	9/14/2010	<1	<1	<5	
1,2-Dibromoethane	ug / L	9/2/2010	<1	<1	<5	
1,2-Dibromoethane	ug / L	10/15/2010	<1	<1	<5	<5
1,2-Dibromoethane	ug / L	4/26/2010	<1	<1	<5	
1,2-Dibromoethane	ug / L	5/17/2010	<1	<1	<5	
1,2-Dibromoethane	ug / L	3/18/2010	<1	<1		<5
1,2-Dibromoethane	ug / L	6/29/2010	<1	<1	<5	<5
1,2-Dibromoethane	ug / L	7/27/2010	<1	<1	<5	<5
1,2-Dibromoethane	ug / L	5/11/2011		<1		<5
1,2-Dibromoethane	ug / L	6/30/2011		<1		<5
1,2-Dibromoethane	ug / L	7/28/2011		<1		<5
1,2-Dibromoethane	ug / L	9/1/2011		<1		<5
1,2-Dibromoethane	ug / L	10/19/2011		<1		<5
1,2-Dibromoethane	ug / L	3/13/2012	<5	<1		<5
1,2-Dibromoethane	ug / L	4/3/2012	<1	<1		<5
1,2-Dibromoethane	ug / L	5/16/2012	<1	<1	<1	
1,2-Dibromoethane	ug / L	6/15/2012	<1	<1	<1	
1,2-Dibromoethane	ug / L	7/16/2012	<1	<1	<1	<5
1,2-Dibromoethane	ug / L	8/9/2012	<1	<1	<1	
1,2-Dibromoethane	ug / L	9/13/2012	<1	<1	<1	
1,2-Dibromoethane	ug / L	10/2/2012	<1	<1	<1	<5
1,2-Dichlorobenzene	ug / L	3/25/2009	< 1			< 10
1,2-Dichlorobenzene	ug / L	5/1/2009	< 1		< 5	
1,2-Dichlorobenzene	ug / L	6/30/2009	< 1		< 5	< 10
1,2-Dichlorobenzene	ug / L	7/29/2009	< 1		< 5	< 5
1,2-Dichlorobenzene	ug / L	9/2/2009	< 1		< 5	
1,2-Dichlorobenzene	ug / L	12/1/2009				<5
1,2-Dichlorobenzene	ug / L	9/14/2010	<1	<1	<5	
1,2-Dichlorobenzene	ug / L	9/2/2010	<1	<1	<5	
1,2-Dichlorobenzene	ug / L	10/15/2010	<1	<1	<5	<5
1,2-Dichlorobenzene	ug / L	4/26/2010	<1	<1	<5	
1,2-Dichlorobenzene	ug / L	5/17/2010	<1	<1	<5	
1,2-Dichlorobenzene	ug / L	3/18/2010	<1	<1		<5
1,2-Dichlorobenzene	ug / L	6/29/2010	<1	<1	<5	<5
1,2-Dichlorobenzene	ug / L	7/27/2010	<1	<1	<5	<5
1,2-Dichlorobenzene	ug / L	5/11/2011		<1		<5
1,2-Dichlorobenzene	ug / L	6/30/2011		<1		<5
1,2-Dichlorobenzene	ug / L	7/28/2011		<1		<5
1,2-Dichlorobenzene	ug / L	9/1/2011		<1		<5
1,2-Dichlorobenzene	ug / L	10/19/2011		<1		<5
1,2-Dichlorobenzene	ug / L	3/13/2012	<5	<1		<5
1,2-Dichlorobenzene	ug / L	4/3/2012	<1	<1		<5
1,2-Dichlorobenzene	ug / L	5/16/2012	<1	<1	<1	
1,2-Dichlorobenzene	ug / L	6/15/2012	<1	<1	<1	
1,2-Dichlorobenzene	ug / L	7/16/2012	<1	<1	<1	<5
1,2-Dichlorobenzene	ug / L	8/9/2012	<1	<1	<1	
1,2-Dichlorobenzene	ug / L	9/13/2012	<1	<1	<1	
1,2-Dichlorobenzene	ug / L	10/2/2012	<1	<1	<1	<5

Parameter	Units	Date	Leachate Field Blank	Leachate Trip Blank	Treated Leachate	Untreated Leachate
1,2-Dichloroethane	ug / L	3/25/2009	< 2			< 20
1,2-Dichloroethane	ug / L	5/1/2009	< 2		< 10	
1,2-Dichloroethane	ug / L	6/30/2009	< 2		< 10	< 20
1,2-Dichloroethane	ug / L	7/29/2009	< 2		< 10	< 10
1,2-Dichloroethane	ug / L	9/2/2009	< 2		< 10	
1,2-Dichloroethane	ug / L	12/1/2009				<10
1,2-Dichloroethane	ug / L	9/14/2010	<0.5	<0.5	<2.5	
1,2-Dichloroethane	ug / L	9/2/2010	<0.5	<0.5	<2.5	
1,2-Dichloroethane	ug / L	10/15/2010	<0.5	<0.5	<2.5	<2.5
1,2-Dichloroethane	ug / L	4/26/2010	<0.5	<0.5	<2.5	
1,2-Dichloroethane	ug / L	5/17/2010	<0.5	<0.5	<2.5	
1,2-Dichloroethane	ug / L	3/18/2010	<0.5	<0.5		<10
1,2-Dichloroethane	ug / L	6/29/2010	<0.5	<0.5	<2.5	<2.5
1,2-Dichloroethane	ug / L	7/27/2010	<0.5	<0.5	<2.5	<2.5
1,2-Dichloroethane	ug / L	5/11/2011		<0.5		<2.5
1,2-Dichloroethane	ug / L	6/30/2011		<0.5		<2.5
1,2-Dichloroethane	ug / L	7/28/2011		<0.5		<2.5
1,2-Dichloroethane	ug / L	9/1/2011		<0.5		<2.5
1,2-Dichloroethane	ug / L	10/19/2011		<0.5		<2.5
1,2-Dichloroethane	ug / L	3/13/2012	<5	<1		<5
1,2-Dichloroethane	ug / L	4/3/2012	<1	<1		<5
1,2-Dichloroethane	ug / L	5/16/2012	<1	<1	<1	
1,2-Dichloroethane	ug / L	6/15/2012	<1	<1	<1	
1,2-Dichloroethane	ug / L	7/16/2012	<1	<1	<1	<5
1,2-Dichloroethane	ug / L	8/9/2012	<1	<1	<1	
1,2-Dichloroethane	ug / L	9/13/2012	<1	<1	<1	
1,2-Dichloroethane	ug / L	10/2/2012	<1	<1	<1	<5
1,2-Dichloropropane	ug / L	3/25/2009	< 1			< 10
1,2-Dichloropropane	ug / L	5/1/2009	< 1		< 5	
1,2-Dichloropropane	ug / L	6/30/2009	< 1		< 5	< 10
1,2-Dichloropropane	ug / L	7/29/2009	< 1		< 5	< 5
1,2-Dichloropropane	ug / L	9/2/2009	< 1		< 5	
1,2-Dichloropropane	ug / L	12/1/2009				<5
1,2-Dichloropropane	ug / L	9/14/2010	<1	<1	<5	
1,2-Dichloropropane	ug / L	9/2/2010	<1	<1	<5	
1,2-Dichloropropane	ug / L	10/15/2010	<1	<1	<5	<5
1,2-Dichloropropane	ug / L	4/26/2010	<1	<1	<5	
1,2-Dichloropropane	ug / L	5/17/2010	<1	<1	<5	
1,2-Dichloropropane	ug / L	3/18/2010	<1	<1		<5
1,2-Dichloropropane	ug / L	6/29/2010	<1	<1	<5	<5
1,2-Dichloropropane	ug / L	7/27/2010	<1	<1	<5	<5
1,2-Dichloropropane	ug / L	5/11/2011		<1		<5
1,2-Dichloropropane	ug / L	6/30/2011		<1		<5
1,2-Dichloropropane	ug / L	7/28/2011		<1		<5
1,2-Dichloropropane	ug / L	9/1/2011		<1		<5
1,2-Dichloropropane	ug / L	10/19/2011		<1		<5
1,2-Dichloropropane	ug / L	3/13/2012	<20	<4		<20
1,2-Dichloropropane	ug / L	4/3/2012	<4	<4		<20
1,2-Dichloropropane	ug / L	5/16/2012	<4	<4	<4	
1,2-Dichloropropane	ug / L	6/15/2012	<4	<4	<4	
1,2-Dichloropropane	ug / L	7/16/2012	<4	<4	<4	<20
1,2-Dichloropropane	ug / L	8/9/2012	<4	<4	<4	
1,2-Dichloropropane	ug / L	9/13/2012	<4	<4	<4	
1,2-Dichloropropane	ug / L	10/2/2012	<4	<4	<4	<20
1,3,5-Trimethylbenzene	ug / L	3/25/2009	< 1			< 10
1,3,5-Trimethylbenzene	ug / L	5/1/2009	< 1		6.4	
1,3,5-Trimethylbenzene	ug / L	6/30/2009	< 1		< 5	< 10
1,3,5-Trimethylbenzene	ug / L	7/29/2009	< 1		< 5	5
1,3,5-Trimethylbenzene	ug / L	9/2/2009	< 1		< 5	
1,3,5-Trimethylbenzene	ug / L	12/1/2009				7.6
1,3,5-Trimethylbenzene	ug / L	9/14/2010	<1	<1	<5	
1,3,5-Trimethylbenzene	ug / L	9/2/2010	<1	<1	<5	
1,3,5-Trimethylbenzene	ug / L	10/15/2010	<1	<1	<5	<5
1,3,5-Trimethylbenzene	ug / L	4/26/2010	<1	<1	<5	
1,3,5-Trimethylbenzene	ug / L	5/17/2010	<1	<1	<5	
1,3,5-Trimethylbenzene	ug / L	3/18/2010	<1	<1		<5
1,3,5-Trimethylbenzene	ug / L	6/29/2010	<1	<1	<5	<5
1,3,5-Trimethylbenzene	ug / L	7/27/2010	<1	<1	<5	<5

Parameter	Units	Date	Leachate Field Blank	Leachate Trip Blank	Treated Leachate	Untreated Leachate
1,3,5-Trimethylbenzene	ug / L	5/11/2011		<1		<5
1,3,5-Trimethylbenzene	ug / L	6/30/2011		<1		<5
1,3,5-Trimethylbenzene	ug / L	7/28/2011		<1		<5
1,3,5-Trimethylbenzene	ug / L	9/1/2011		<1		<5
1,3,5-Trimethylbenzene	ug / L	10/19/2011		<1		<5
1,3,5-Trimethylbenzene	ug / L	3/13/2012	26.2	<1		24.4
1,3,5-Trimethylbenzene	ug / L	4/3/2012	<1	<1		26.9
1,3,5-Trimethylbenzene	ug / L	5/16/2012	<1	<1	<1	
1,3,5-Trimethylbenzene	ug / L	6/15/2012	<1	<1	<1	
1,3,5-Trimethylbenzene	ug / L	7/16/2012	<1	<1	<1	<5
1,3,5-Trimethylbenzene	ug / L	8/9/2012	<1	<1	<1	
1,3,5-Trimethylbenzene	ug / L	9/13/2012	<1	<1	<1	
1,3,5-Trimethylbenzene	ug / L	10/2/2012	<1	<1	<1	<5
1,3-Dichlorobenzene	ug / L	3/25/2009	< 1			< 10
1,3-Dichlorobenzene	ug / L	5/1/2009	< 1		< 5	
1,3-Dichlorobenzene	ug / L	6/30/2009	< 1		< 5	< 10
1,3-Dichlorobenzene	ug / L	7/29/2009	< 1		< 5	< 5
1,3-Dichlorobenzene	ug / L	9/2/2009	< 1		< 5	
1,3-Dichlorobenzene	ug / L	12/1/2009				<5
1,3-Dichlorobenzene	ug / L	9/14/2010	<1	<1	<5	
1,3-Dichlorobenzene	ug / L	9/2/2010	<1	<1	<5	
1,3-Dichlorobenzene	ug / L	10/15/2010	<1	<1	<5	<5
1,3-Dichlorobenzene	ug / L	4/26/2010	<1	<1	<5	
1,3-Dichlorobenzene	ug / L	5/17/2010	<1	<1	<5	
1,3-Dichlorobenzene	ug / L	3/18/2010	<1	<1		<5
1,3-Dichlorobenzene	ug / L	6/29/2010	<1	<1	<5	<5
1,3-Dichlorobenzene	ug / L	7/27/2010	<1	<1	<5	<5
1,3-Dichlorobenzene	ug / L	5/11/2011		<1		<5
1,3-Dichlorobenzene	ug / L	6/30/2011		<1		<5
1,3-Dichlorobenzene	ug / L	7/28/2011		<1		<5
1,3-Dichlorobenzene	ug / L	9/1/2011		<1		<5
1,3-Dichlorobenzene	ug / L	10/19/2011		<1		<5
1,3-Dichlorobenzene	ug / L	3/13/2012	<5	<1		<5
1,3-Dichlorobenzene	ug / L	4/3/2012	<1	<1		<5
1,3-Dichlorobenzene	ug / L	5/16/2012	<1	<1	<1	
1,3-Dichlorobenzene	ug / L	6/15/2012	<1	<1	<1	
1,3-Dichlorobenzene	ug / L	7/16/2012	<1	<1	<1	<5
1,3-Dichlorobenzene	ug / L	8/9/2012	<1	<1	<1	
1,3-Dichlorobenzene	ug / L	9/13/2012	<1	<1	<1	
1,3-Dichlorobenzene	ug / L	10/2/2012	<1	<1	<1	<5
1,3-Dichloropropane	ug / L	3/25/2009	< 1			< 10
1,3-Dichloropropane	ug / L	5/1/2009	< 1		< 5	
1,3-Dichloropropane	ug / L	6/30/2009	< 1		< 5	< 10
1,3-Dichloropropane	ug / L	7/29/2009	< 1		< 5	< 5
1,3-Dichloropropane	ug / L	9/2/2009	< 1		< 5	
1,3-Dichloropropane	ug / L	12/1/2009				<5
1,3-Dichloropropane	ug / L	9/14/2010	<1	<1	<5	
1,3-Dichloropropane	ug / L	9/2/2010	<1	<1	<5	
1,3-Dichloropropane	ug / L	10/15/2010	<1	<1	<5	<5
1,3-Dichloropropane	ug / L	4/26/2010	<1	<1	<5	
1,3-Dichloropropane	ug / L	5/17/2010	<1	<1	<5	
1,3-Dichloropropane	ug / L	3/18/2010	<1	<1		<5
1,3-Dichloropropane	ug / L	6/29/2010	<1	<1	<5	<5
1,3-Dichloropropane	ug / L	7/27/2010	<1	<1	<5	<5
1,3-Dichloropropane	ug / L	5/11/2011		<1		<5
1,3-Dichloropropane	ug / L	6/30/2011		<1		<5
1,3-Dichloropropane	ug / L	7/28/2011		<1		<5
1,3-Dichloropropane	ug / L	9/1/2011		<1		<5
1,3-Dichloropropane	ug / L	10/19/2011		<1		<5
1,3-Dichloropropane	ug / L	3/13/2012	<5	<1		<5
1,3-Dichloropropane	ug / L	4/3/2012	<1	<1		<5
1,3-Dichloropropane	ug / L	5/16/2012	<1	<1	<1	
1,3-Dichloropropane	ug / L	6/15/2012	<1	<1	<1	
1,3-Dichloropropane	ug / L	7/16/2012	<1	<1	<1	<5
1,3-Dichloropropane	ug / L	8/9/2012	<1	<1	<1	
1,3-Dichloropropane	ug / L	9/13/2012	<1	<1	<1	
1,3-Dichloropropane	ug / L	10/2/2012	<1	<1	<1	<5

Parameter	Units	Date	Leachate Field Blank	Leachate Trip Blank	Treated Leachate	Untreated Leachate
1,4-Dichlorobenzene	ug / L	3/25/2009	< 1			< 10
1,4-Dichlorobenzene	ug / L	5/1/2009	< 1		< 5	
1,4-Dichlorobenzene	ug / L	6/30/2009	< 1		< 5	< 10
1,4-Dichlorobenzene	ug / L	7/29/2009	< 1		< 5	5.4
1,4-Dichlorobenzene	ug / L	9/2/2009	< 1		< 5	
1,4-Dichlorobenzene	ug / L	12/1/2009				<5
1,4-Dichlorobenzene	ug / L	9/14/2010	<0.5	<0.5	<2.5	
1,4-Dichlorobenzene	ug / L	9/2/2010	<0.5	<0.5	<2.5	
1,4-Dichlorobenzene	ug / L	10/15/2010	<0.5	<0.5	<2.5	<2.5
1,4-Dichlorobenzene	ug / L	4/26/2010	<0.5	<0.5	<2.5	
1,4-Dichlorobenzene	ug / L	5/17/2010	<0.5	<0.5	<2.5	
1,4-Dichlorobenzene	ug / L	3/18/2010	<0.5	<0.5		5.7
1,4-Dichlorobenzene	ug / L	6/29/2010	<0.5	<0.5	<2.5	5.4
1,4-Dichlorobenzene	ug / L	7/27/2010	<0.5	<0.5	<2.5	4.4
1,4-Dichlorobenzene	ug / L	5/11/2011		<0.5		3.3
1,4-Dichlorobenzene	ug / L	6/30/2011		<0.5		3
1,4-Dichlorobenzene	ug / L	7/28/2011		<0.5		<2.5
1,4-Dichlorobenzene	ug / L	9/1/2011		<0.5		<2.5
1,4-Dichlorobenzene	ug / L	10/19/2011		<0.5		<2.5
1,4-Dichlorobenzene	ug / L	3/13/2012	<5	<1		<5
1,4-Dichlorobenzene	ug / L	4/3/2012	<1	<1		<5
1,4-Dichlorobenzene	ug / L	5/16/2012	<1	<1	<1	
1,4-Dichlorobenzene	ug / L	6/15/2012	<1	<1	<1	
1,4-Dichlorobenzene	ug / L	7/16/2012	<1	<1	<1	<5
1,4-Dichlorobenzene	ug / L	8/9/2012	<1	<1	<1	
1,4-Dichlorobenzene	ug / L	9/13/2012	<1	<1	<1	
1,4-Dichlorobenzene	ug / L	10/2/2012	<1	<1	<1	<5
2,2-Dichloropropane	ug / L	3/25/2009	< 1			< 10
2,2-Dichloropropane	ug / L	5/1/2009	< 1		< 5	
2,2-Dichloropropane	ug / L	6/30/2009	< 1		< 5	< 10
2,2-Dichloropropane	ug / L	7/29/2009	< 1		< 5	< 5
2,2-Dichloropropane	ug / L	9/2/2009	< 1		< 5	
2,2-Dichloropropane	ug / L	12/1/2009				<5
2,2-Dichloropropane	ug / L	9/14/2010	<1	<1	<5	
2,2-Dichloropropane	ug / L	9/2/2010	<1	<1	<5	
2,2-Dichloropropane	ug / L	10/15/2010	<1	<1	<5	<5
2,2-Dichloropropane	ug / L	4/26/2010	<1	<1	<5	
2,2-Dichloropropane	ug / L	5/17/2010	<1	<1	<5	
2,2-Dichloropropane	ug / L	3/18/2010	<1	<1		<5
2,2-Dichloropropane	ug / L	6/29/2010	<1	<1	<5	<5
2,2-Dichloropropane	ug / L	7/27/2010	<1	<1	<5	<5
2,2-Dichloropropane	ug / L	5/11/2011		<1		<5
2,2-Dichloropropane	ug / L	6/30/2011		<1		<5
2,2-Dichloropropane	ug / L	7/28/2011		<1		<5
2,2-Dichloropropane	ug / L	9/1/2011		<1		<5
2,2-Dichloropropane	ug / L	10/19/2011		<1		<5
2,2-Dichloropropane	ug / L	3/13/2012	<20	<4		<20
2,2-Dichloropropane	ug / L	4/3/2012	<4	<4		<20
2,2-Dichloropropane	ug / L	5/16/2012	<4	<4	<4	
2,2-Dichloropropane	ug / L	6/15/2012	<4	<4	<4	
2,2-Dichloropropane	ug / L	7/16/2012	<4	<4	<4	<20
2,2-Dichloropropane	ug / L	8/9/2012	<4	<4	<4	
2,2-Dichloropropane	ug / L	9/13/2012	<4	<4	<4	
2,2-Dichloropropane	ug / L	10/2/2012	<4	<4	<4	<20
2-Chlorotoluene	ug / L	3/25/2009	< 1			< 10
2-Chlorotoluene	ug / L	5/1/2009	< 1		< 5	
2-Chlorotoluene	ug / L	6/30/2009	< 1		< 5	< 10
2-Chlorotoluene	ug / L	7/29/2009	< 1		< 5	< 5
2-Chlorotoluene	ug / L	9/2/2009	< 1		< 5	
2-Chlorotoluene	ug / L	12/1/2009				<5
2-Chlorotoluene	ug / L	9/14/2010	<1	<1	<5	
2-Chlorotoluene	ug / L	9/2/2010	<1	<1	<5	
2-Chlorotoluene	ug / L	10/15/2010	<1	<1	<5	<5
2-Chlorotoluene	ug / L	4/26/2010	<1	<1	<5	
2-Chlorotoluene	ug / L	5/17/2010	<1	<1	<5	
2-Chlorotoluene	ug / L	3/18/2010	<1	<1		<5
2-Chlorotoluene	ug / L	6/29/2010	<1	<1	<5	<5
2-Chlorotoluene	ug / L	7/27/2010	<1	<1	<5	<5

Parameter	Units	Date	Leachate Field Blank	Leachate Trip Blank	Treated Leachate	Untreated Leachate
2-Chlorotoluene	ug / L	5/11/2011		<1		<5
2-Chlorotoluene	ug / L	6/30/2011		<1		<5
2-Chlorotoluene	ug / L	7/28/2011		<1		<5
2-Chlorotoluene	ug / L	9/1/2011		<1		<5
2-Chlorotoluene	ug / L	10/19/2011		<1		<5
2-Chlorotoluene	ug / L	3/13/2012	<5	<1		<5
2-Chlorotoluene	ug / L	4/3/2012	<1	<1		<5
2-Chlorotoluene	ug / L	5/16/2012	<1	<1	<1	
2-Chlorotoluene	ug / L	6/15/2012	<1	<1	<1	
2-Chlorotoluene	ug / L	7/16/2012	<1	<1	<1	<5
2-Chlorotoluene	ug / L	8/9/2012	<1	<1	<1	
2-Chlorotoluene	ug / L	9/13/2012	<1	<1	<1	
2-Chlorotoluene	ug / L	10/2/2012	<1	<1	<1	<5
4-Chlorotoluene	ug / L	3/25/2009	< 1			< 10
4-Chlorotoluene	ug / L	5/1/2009	< 1		< 5	
4-Chlorotoluene	ug / L	6/30/2009	< 1		< 5	< 10
4-Chlorotoluene	ug / L	7/29/2009	< 1		< 5	< 5
4-Chlorotoluene	ug / L	9/2/2009	< 1		< 5	
4-Chlorotoluene	ug / L	12/1/2009				<5
4-Chlorotoluene	ug / L	9/14/2010	<1	<1	<5	
4-Chlorotoluene	ug / L	9/2/2010	<1	<1	<5	
4-Chlorotoluene	ug / L	10/15/2010	<1	<1	<5	<5
4-Chlorotoluene	ug / L	4/26/2010	<1	<1	<5	
4-Chlorotoluene	ug / L	5/17/2010	<1	<1	<5	
4-Chlorotoluene	ug / L	3/18/2010	<1	<1		<5
4-Chlorotoluene	ug / L	6/29/2010	<1	<1	<5	<5
4-Chlorotoluene	ug / L	7/27/2010	<1	<1	<5	<5
4-Chlorotoluene	ug / L	5/11/2011		<1		<5
4-Chlorotoluene	ug / L	6/30/2011		<1		<5
4-Chlorotoluene	ug / L	7/28/2011		<1		<5
4-Chlorotoluene	ug / L	9/1/2011		<1		<5
4-Chlorotoluene	ug / L	10/19/2011		<1		<5
4-Chlorotoluene	ug / L	3/13/2012	<5	<1		<5
4-Chlorotoluene	ug / L	4/3/2012	<1	<1		<5
4-Chlorotoluene	ug / L	5/16/2012	<1	<1	<1	
4-Chlorotoluene	ug / L	6/15/2012	<1	<1	<1	
4-Chlorotoluene	ug / L	7/16/2012	<1	<1	<1	<5
4-Chlorotoluene	ug / L	8/9/2012	<1	<1	<1	
4-Chlorotoluene	ug / L	9/13/2012	<1	<1	<1	
4-Chlorotoluene	ug / L	10/2/2012	<1	<1	<1	<5
Acetone	ug / L	3/25/2009	< 20			440
Acetone	ug / L	5/1/2009	< 20		100	
Acetone	ug / L	6/30/2009	< 20		< 100	< 200
Acetone	ug / L	7/29/2009	< 20		< 100	< 100
Acetone	ug / L	9/2/2009	< 20		< 100	
Acetone	ug / L	12/1/2009				<100
Acetone	ug / L	9/14/2010	<20	<20	<100	
Acetone	ug / L	9/2/2010	<20	<20	<100	
Acetone	ug / L	10/15/2010	<20	<20	<100	<100
Acetone	ug / L	4/26/2010	<20	<20	<100	
Acetone	ug / L	5/17/2010	<20	<20	<100	
Acetone	ug / L	3/18/2010	<20	<20		130
Acetone	ug / L	6/29/2010	<20	<20	<100	<100
Acetone	ug / L	7/27/2010	<20	<20	170	<100
Acetone	ug / L	5/11/2011		<20		<100
Acetone	ug / L	6/30/2011		<20		<100
Acetone	ug / L	7/28/2011		<20		<100
Acetone	ug / L	9/1/2011		<20		<100
Acetone	ug / L	10/19/2011		<20		<100
Acetone	ug / L	3/13/2012	<125	<25		<125
Acetone	ug / L	4/3/2012	<25	<25		<125
Acetone	ug / L	5/16/2012	<25	<25	<25	
Acetone	ug / L	6/15/2012	<25	<25	<25	
Acetone	ug / L	7/16/2012	<25	<25	<25	<125
Acetone	ug / L	8/9/2012	<25	<25	<25	
Acetone	ug / L	9/13/2012	<25	<25	<25	
Acetone	ug / L	10/2/2012	<25	<25	<25	1330

Parameter	Units	Date	Leachate Field Blank	Leachate Trip Blank	Treated Leachate	Untreated Leachate
Allyl Chloride	ug / L	3/25/2009	< 1			< 10
Allyl Chloride	ug / L	5/1/2009	< 1		< 5	
Allyl Chloride	ug / L	6/30/2009	< 1		< 5	< 10
Allyl Chloride	ug / L	7/29/2009	< 1		< 5	< 5
Allyl Chloride	ug / L	9/2/2009	< 1		< 5	
Allyl Chloride	ug / L	12/1/2009				<5
Allyl Chloride	ug / L	9/14/2010	<1	<1	<5	
Allyl Chloride	ug / L	9/2/2010	<1	<1	<5	
Allyl Chloride	ug / L	10/15/2010	<1	<1	<5	<5
Allyl Chloride	ug / L	4/26/2010	<1	<1	<5	
Allyl Chloride	ug / L	5/17/2010	<1	<1	<5	
Allyl Chloride	ug / L	3/18/2010	<1	<1		<5
Allyl Chloride	ug / L	6/29/2010	<1	<1	<5	<5
Allyl Chloride	ug / L	7/27/2010	<1	<1	<5	<5
Allyl Chloride	ug / L	5/11/2011	<1	<1		<5
Allyl Chloride	ug / L	6/30/2011	<1	<1		<5
Allyl Chloride	ug / L	7/28/2011	<1	<1		<5
Allyl Chloride	ug / L	9/1/2011	<1	<1		<5
Allyl Chloride	ug / L	10/19/2011	<1	<1		<5
Allyl Chloride	ug / L	3/13/2012	<20	<4		<20
Allyl Chloride	ug / L	4/3/2012	<4	<4		<20
Allyl Chloride	ug / L	5/16/2012	<4	<4	<4	
Allyl Chloride	ug / L	6/15/2012	<4	<4	<4	
Allyl Chloride	ug / L	7/16/2012	<4	<4	<4	<20
Allyl Chloride	ug / L	8/9/2012	<4	<4	<4	
Allyl Chloride	ug / L	9/13/2012	<4	<4	<4	
Allyl Chloride	ug / L	10/2/2012	<4	<4	<4	<20
Benzene	ug / L	3/25/2009	< 1			< 10
Benzene	ug / L	5/1/2009	< 1		< 5	
Benzene	ug / L	6/30/2009	< 1		< 5	< 10
Benzene	ug / L	7/29/2009	< 1		< 5	5.4
Benzene	ug / L	9/2/2009	< 1		< 5	
Benzene	ug / L	12/1/2009				<5
Benzene	ug / L	9/14/2010	<0.5	<0.5	<2.5	
Benzene	ug / L	9/2/2010	<0.5	<0.5	<2.5	
Benzene	ug / L	10/15/2010	<0.5	<0.5	<2.5	<2.5
Benzene	ug / L	4/26/2010	<0.5	<0.5	<2.5	
Benzene	ug / L	5/17/2010	<0.5	<0.5	<2.5	
Benzene	ug / L	3/18/2010	<0.5	<0.5		6.3
Benzene	ug / L	6/29/2010	<0.5	<0.5	<2.5	4.5
Benzene	ug / L	7/27/2010	<0.5	<0.5	<2.5	2.9
Benzene	ug / L	5/11/2011	<0.5	<0.5		<2.5
Benzene	ug / L	6/30/2011	<0.5	<0.5		<2.5
Benzene	ug / L	7/28/2011	<0.5	<0.5		<2.5
Benzene	ug / L	9/1/2011	<0.5	<0.5		<2.5
Benzene	ug / L	10/19/2011	<0.5	<0.5		<2.5
Benzene	ug / L	3/13/2012	<5	<1		<5
Benzene	ug / L	4/3/2012	<1	<1		<5
Benzene	ug / L	5/16/2012	<1	<1	<1	
Benzene	ug / L	6/15/2012	<1	<1	<1	
Benzene	ug / L	7/16/2012	<1	<1	<1	<5
Benzene	ug / L	8/9/2012	<1	<1	<1	
Benzene	ug / L	9/13/2012	<1	<1	<1	
Benzene	ug / L	10/2/2012	<1	<1	<1	<5
Bromobenzene	ug / L	3/25/2009	< 1			< 10
Bromobenzene	ug / L	5/1/2009	< 1		< 5	
Bromobenzene	ug / L	6/30/2009	< 1		< 5	< 10
Bromobenzene	ug / L	7/29/2009	< 1		< 5	< 5
Bromobenzene	ug / L	9/2/2009	< 1		< 5	
Bromobenzene	ug / L	12/1/2009				<5
Bromobenzene	ug / L	9/14/2010	<1	<1	<5	
Bromobenzene	ug / L	9/2/2010	<1	<1	<5	
Bromobenzene	ug / L	10/15/2010	<1	<1	<5	<5
Bromobenzene	ug / L	4/26/2010	<1	<1	<5	
Bromobenzene	ug / L	5/17/2010	<1	<1	<5	
Bromobenzene	ug / L	3/18/2010	<1	<1		<5
Bromobenzene	ug / L	6/29/2010	<1	<1	<5	<5
Bromobenzene	ug / L	7/27/2010	<1	<1	<5	<5

Parameter	Units	Date	Leachate Field Blank	Leachate Trip Blank	Treated Leachate	Untreated Leachate
Bromobenzene	ug / L	5/11/2011	<1	<1		<5
Bromobenzene	ug / L	6/30/2011	<1	<1		<5
Bromobenzene	ug / L	7/28/2011	<1	<1		<5
Bromobenzene	ug / L	9/1/2011	<1	<1		<5
Bromobenzene	ug / L	10/19/2011	<1	<1		<5
Bromobenzene	ug / L	3/13/2012	<5	<1		<5
Bromobenzene	ug / L	4/3/2012	<1	<1		<5
Bromobenzene	ug / L	5/16/2012	<1	<1	<1	
Bromobenzene	ug / L	6/15/2012	<1	<1	<1	
Bromobenzene	ug / L	7/16/2012	<1	<1	<1	<5
Bromobenzene	ug / L	8/9/2012	<1	<1	<1	
Bromobenzene	ug / L	9/13/2012	<1	<1	<1	
Bromobenzene	ug / L	10/2/2012	<1	<1	<1	<5
Bromochloromethane	ug / L	3/25/2009	< 1			< 10
Bromochloromethane	ug / L	5/1/2009	< 1		< 5	
Bromochloromethane	ug / L	6/30/2009	< 1		< 5	< 10
Bromochloromethane	ug / L	7/29/2009	< 1		< 5	< 5
Bromochloromethane	ug / L	9/2/2009	< 1		< 5	
Bromochloromethane	ug / L	12/1/2009				<5
Bromochloromethane	ug / L	9/14/2010	<1	<1	<5	
Bromochloromethane	ug / L	9/2/2010	<1	<1	<5	
Bromochloromethane	ug / L	10/15/2010	<1	<1	<5	<5
Bromochloromethane	ug / L	4/26/2010	<1	<1	<5	
Bromochloromethane	ug / L	5/17/2010	<1	<1	<5	
Bromochloromethane	ug / L	3/18/2010	<1	<1		<5
Bromochloromethane	ug / L	6/29/2010	<1	<1	<5	<5
Bromochloromethane	ug / L	7/27/2010	<1	<1	<5	<5
Bromochloromethane	ug / L	5/11/2011	<1	<1		<5
Bromochloromethane	ug / L	6/30/2011	<1	<1		<5
Bromochloromethane	ug / L	7/28/2011	<1	<1		<5
Bromochloromethane	ug / L	9/1/2011	<1	<1		<5
Bromochloromethane	ug / L	10/19/2011	<1	<1		<5
Bromochloromethane	ug / L	3/13/2012	<5	<1		<5
Bromochloromethane	ug / L	4/3/2012	<1	<1		<5
Bromochloromethane	ug / L	5/16/2012	<1	<1	<1	
Bromochloromethane	ug / L	6/15/2012	<1	<1	<1	
Bromochloromethane	ug / L	7/16/2012	<1	<1	<1	<5
Bromochloromethane	ug / L	8/9/2012	<1	<1	<1	
Bromochloromethane	ug / L	9/13/2012	<1	<1	<1	
Bromochloromethane	ug / L	10/2/2012	<1	<1	<1	<5
Bromodichloromethane	ug / L	3/25/2009	< 1			< 10
Bromodichloromethane	ug / L	5/1/2009	< 1		< 5	
Bromodichloromethane	ug / L	6/30/2009	< 1		< 5	< 10
Bromodichloromethane	ug / L	7/29/2009	< 1		< 5	< 5
Bromodichloromethane	ug / L	9/2/2009	< 1		< 5	
Bromodichloromethane	ug / L	12/1/2009				<5
Bromodichloromethane	ug / L	9/14/2010	<0.5	<0.5	<2.5	
Bromodichloromethane	ug / L	9/2/2010	<0.5	<0.5	<2.5	
Bromodichloromethane	ug / L	10/15/2010	<0.5	<0.5	<2.5	<2.5
Bromodichloromethane	ug / L	4/26/2010	<0.5	<0.5	<2.5	
Bromodichloromethane	ug / L	5/17/2010	<0.5	<0.5	<2.5	
Bromodichloromethane	ug / L	3/18/2010	<0.5	<0.5		<5
Bromodichloromethane	ug / L	6/29/2010	<0.5	<0.5	<2.5	<2.5
Bromodichloromethane	ug / L	7/27/2010	<0.5	<0.5	<2.5	<2.5
Bromodichloromethane	ug / L	5/11/2011	<0.5	<0.5		<2.5
Bromodichloromethane	ug / L	6/30/2011	<0.5	<0.5		<2.5
Bromodichloromethane	ug / L	7/28/2011	<0.5	<0.5		<2.5
Bromodichloromethane	ug / L	9/1/2011	<0.5	<0.5		<2.5
Bromodichloromethane	ug / L	10/19/2011	<0.5	<0.5		<2.5
Bromodichloromethane	ug / L	3/13/2012	<5	<1		<5
Bromodichloromethane	ug / L	4/3/2012	<1	<1		<5
Bromodichloromethane	ug / L	5/16/2012	<1	<1	<1	
Bromodichloromethane	ug / L	6/15/2012	<1	<1	<1	
Bromodichloromethane	ug / L	7/16/2012	<1	<1	<1	<5
Bromodichloromethane	ug / L	8/9/2012	<1	<1	<1	
Bromodichloromethane	ug / L	9/13/2012	<1	<1	<1	
Bromodichloromethane	ug / L	10/2/2012	<1	<1	<1	<5

Parameter	Units	Date	Leachate Field Blank	Leachate Trip Blank	Treated Leachate	Untreated Leachate
Bromoform	ug / L	3/25/2009	< 1			< 10
Bromoform	ug / L	5/1/2009	< 1		< 5	
Bromoform	ug / L	6/30/2009	< 1		< 5	< 10
Bromoform	ug / L	7/29/2009	< 1		< 5	< 5
Bromoform	ug / L	9/2/2009	< 1		< 5	
Bromoform	ug / L	12/1/2009				<5
Bromoform	ug / L	9/14/2010	<1	<1	<5	
Bromoform	ug / L	9/2/2010	<1	<1	<5	
Bromoform	ug / L	10/15/2010	<1	<1	<5	<5
Bromoform	ug / L	4/26/2010	<1	<1	<5	
Bromoform	ug / L	5/17/2010	<1	<1	<5	
Bromoform	ug / L	3/18/2010	<1	<1		<5
Bromoform	ug / L	6/29/2010	<1	<1	<5	<5
Bromoform	ug / L	7/27/2010	<1	<1	<5	<5
Bromoform	ug / L	5/11/2011	<1	<1		<5
Bromoform	ug / L	6/30/2011	<1	<1		<5
Bromoform	ug / L	7/28/2011	<1	<1		<5
Bromoform	ug / L	9/1/2011	<1	<1		<5
Bromoform	ug / L	10/19/2011	<1	<1		<5
Bromoform	ug / L	3/13/2012	<20	<4		<20
Bromoform	ug / L	4/3/2012	<4	<4		<20
Bromoform	ug / L	5/16/2012	<4	<4	<4	
Bromoform	ug / L	6/15/2012	<4	<4	<4	
Bromoform	ug / L	7/16/2012	<4	<4	<4	<20
Bromoform	ug / L	8/9/2012	<4	<4	<4	
Bromoform	ug / L	9/13/2012	<4	<4	<4	
Bromoform	ug / L	10/2/2012	<4	<4	<4	<20
Bromomethane	ug / L	3/25/2009	< 2			< 20
Bromomethane	ug / L	5/1/2009	< 2		< 10	
Bromomethane	ug / L	6/30/2009	< 2		< 10	< 20
Bromomethane	ug / L	7/29/2009	< 2		< 10	< 10
Bromomethane	ug / L	9/2/2009	< 2		< 10	
Bromomethane	ug / L	12/1/2009				<10
Bromomethane	ug / L	9/14/2010	<1	<1	<5	
Bromomethane	ug / L	9/2/2010	<1	<1	<5	
Bromomethane	ug / L	10/15/2010	<1	<1	<5	<5
Bromomethane	ug / L	4/26/2010	<1	<1	<5	
Bromomethane	ug / L	5/17/2010	<1	<1	<5	
Bromomethane	ug / L	3/18/2010	<1	<1		<10
Bromomethane	ug / L	6/29/2010	<1	<1	<5	<5
Bromomethane	ug / L	7/27/2010	<1	<1	<5	<5
Bromomethane	ug / L	5/11/2011	<1	<1		<5
Bromomethane	ug / L	6/30/2011	<1	<1		<5
Bromomethane	ug / L	7/28/2011	<1	<1		<5
Bromomethane	ug / L	9/1/2011	<1	<1		<5
Bromomethane	ug / L	10/19/2011	<1	<1		<5
Bromomethane	ug / L	3/13/2012	<20	<4		<20
Bromomethane	ug / L	4/3/2012	<4	<4		<20
Bromomethane	ug / L	5/16/2012	<4	<4	<4	
Bromomethane	ug / L	6/15/2012	<4	<4	<4	
Bromomethane	ug / L	7/16/2012	<4	<4	<4	<20
Bromomethane	ug / L	8/9/2012	<4	<4	<4	
Bromomethane	ug / L	9/13/2012	<4	<4	<4	
Bromomethane	ug / L	10/2/2012	<4	<4	<4	<20
Carbon Tetrachloride	ug / L	3/25/2009	< 1			< 10
Carbon Tetrachloride	ug / L	5/1/2009	< 1		< 5	
Carbon Tetrachloride	ug / L	6/30/2009	< 1		< 5	< 10
Carbon Tetrachloride	ug / L	7/29/2009	< 1		< 5	< 5
Carbon Tetrachloride	ug / L	9/2/2009	< 1		< 5	
Carbon Tetrachloride	ug / L	12/1/2009				<5
Carbon Tetrachloride	ug / L	9/14/2010	<1	<1	<5	
Carbon Tetrachloride	ug / L	9/2/2010	<1	<1	<5	
Carbon Tetrachloride	ug / L	10/15/2010	<1	<1	<5	<5
Carbon Tetrachloride	ug / L	4/26/2010	<1	<1	<5	
Carbon Tetrachloride	ug / L	5/17/2010	<1	<1	<5	
Carbon Tetrachloride	ug / L	3/18/2010	<1	<1		<5
Carbon Tetrachloride	ug / L	6/29/2010	<1	<1	<5	<5
Carbon Tetrachloride	ug / L	7/27/2010	<1	<1	<5	<5

Parameter	Units	Date	Leachate Field Blank	Leachate Trip Blank	Treated Leachate	Untreated Leachate
Carbon Tetrachloride	ug / L	5/11/2011	<1	<1		<5
Carbon Tetrachloride	ug / L	6/30/2011	<1	<1		<5
Carbon Tetrachloride	ug / L	7/28/2011	<1	<1		<5
Carbon Tetrachloride	ug / L	9/1/2011	<1	<1		<5
Carbon Tetrachloride	ug / L	10/19/2011	<1	<1		<5
Carbon Tetrachloride	ug / L	3/13/2012	<5	<1		<5
Carbon Tetrachloride	ug / L	4/3/2012	<1	<1		<5
Carbon Tetrachloride	ug / L	5/16/2012	<1	<1	<1	
Carbon Tetrachloride	ug / L	6/15/2012	<1	<1	<1	
Carbon Tetrachloride	ug / L	7/16/2012	<1	<1	<1	<5
Carbon Tetrachloride	ug / L	8/9/2012	<1	<1	<1	
Carbon Tetrachloride	ug / L	9/13/2012	<1	<1	<1	
Carbon Tetrachloride	ug / L	10/2/2012	<1	<1	<1	<5
Chlorobenzene	ug / L	3/25/2009	< 1			< 10
Chlorobenzene	ug / L	5/1/2009	< 1		< 5	
Chlorobenzene	ug / L	6/30/2009	< 1		< 5	< 10
Chlorobenzene	ug / L	7/29/2009	< 1		< 5	< 5
Chlorobenzene	ug / L	9/2/2009	< 1		< 5	
Chlorobenzene	ug / L	12/1/2009				<5
Chlorobenzene	ug / L	9/14/2010	<1	<1	<5	
Chlorobenzene	ug / L	9/2/2010	<1	<1	<5	
Chlorobenzene	ug / L	10/15/2010	<1	<1	<5	<5
Chlorobenzene	ug / L	4/26/2010	<1	<1	<5	
Chlorobenzene	ug / L	5/17/2010	<1	<1	<5	
Chlorobenzene	ug / L	3/18/2010	<1	<1		<5
Chlorobenzene	ug / L	6/29/2010	<1	<1	<5	<5
Chlorobenzene	ug / L	7/27/2010	<1	<1	<5	<5
Chlorobenzene	ug / L	5/11/2011	<1	<1		<5
Chlorobenzene	ug / L	6/30/2011	<1	<1		<5
Chlorobenzene	ug / L	7/28/2011	<1	<1		<5
Chlorobenzene	ug / L	9/1/2011	<1	<1		<5
Chlorobenzene	ug / L	10/19/2011	<1	<1		<5
Chlorobenzene	ug / L	3/13/2012	<5	<1		<5
Chlorobenzene	ug / L	4/3/2012	<1	<1		<5
Chlorobenzene	ug / L	5/16/2012	<1	<1	<1	
Chlorobenzene	ug / L	6/15/2012	<1	<1	<1	
Chlorobenzene	ug / L	7/16/2012	<1	<1	<1	<5
Chlorobenzene	ug / L	8/9/2012	<1	<1	<1	
Chlorobenzene	ug / L	9/13/2012	<1	<1	<1	
Chlorobenzene	ug / L	10/2/2012	<1	<1	<1	<5
Chloroethane	ug / L	3/25/2009	< 1			< 10
Chloroethane	ug / L	5/1/2009	< 1		< 5	
Chloroethane	ug / L	6/30/2009	< 1		< 5	< 10
Chloroethane	ug / L	7/29/2009	< 1		< 5	< 5
Chloroethane	ug / L	9/2/2009	< 1		< 5	
Chloroethane	ug / L	12/1/2009				<5
Chloroethane	ug / L	9/14/2010	<1	<1	<5	
Chloroethane	ug / L	9/2/2010	<1	<1	<5	
Chloroethane	ug / L	10/15/2010	<1	<1	<5	<5
Chloroethane	ug / L	4/26/2010	<1	<1	<5	
Chloroethane	ug / L	5/17/2010	<1	<1	<5	
Chloroethane	ug / L	3/18/2010	<1	<1		<5
Chloroethane	ug / L	6/29/2010	<1	<1	<5	<5
Chloroethane	ug / L	7/27/2010	<1	<1	<5	<5
Chloroethane	ug / L	5/11/2011	<1	<1		<5
Chloroethane	ug / L	6/30/2011	<1	<1		<5
Chloroethane	ug / L	7/28/2011	<1	<1		<5
Chloroethane	ug / L	9/1/2011	<1	<1		<5
Chloroethane	ug / L	10/19/2011	<1	<1		<5
Chloroethane	ug / L	3/13/2012	<5	<1		<5
Chloroethane	ug / L	4/3/2012	<1	<1		<5
Chloroethane	ug / L	5/16/2012	<1	<1	<1	
Chloroethane	ug / L	6/15/2012	<1	<1	<1	
Chloroethane	ug / L	7/16/2012	<1	<1	<1	<5
Chloroethane	ug / L	8/9/2012	<1	<1	<1	
Chloroethane	ug / L	9/13/2012	<1	<1	<1	
Chloroethane	ug / L	10/2/2012	<1	<1	<1	<5

Parameter	Units	Date	Leachate Field Blank	Leachate Trip Blank	Treated Leachate	Untreated Leachate
Chloroform	ug / L	3/25/2009	< 1			< 10
Chloroform	ug / L	5/1/2009	< 1		< 5	
Chloroform	ug / L	6/30/2009	< 1		< 5	< 10
Chloroform	ug / L	7/29/2009	< 1		< 5	< 5
Chloroform	ug / L	9/2/2009	< 1		< 5	
Chloroform	ug / L	12/1/2009				<5
Chloroform	ug / L	9/14/2010	<1	<1	<5	
Chloroform	ug / L	9/2/2010	<1	<1	<5	
Chloroform	ug / L	10/15/2010	<1	<1	<5	<5
Chloroform	ug / L	4/26/2010	<1	<1	<5	
Chloroform	ug / L	5/17/2010	<1	<1	<5	
Chloroform	ug / L	3/18/2010	<1	<1		<5
Chloroform	ug / L	6/29/2010	<1	<1	<5	<5
Chloroform	ug / L	7/27/2010	<1	<1	<5	<5
Chloroform	ug / L	5/11/2011	<1	<1		<5
Chloroform	ug / L	6/30/2011	<1	<1		<5
Chloroform	ug / L	7/28/2011	<1	<1		<5
Chloroform	ug / L	9/1/2011	<1	<1		<5
Chloroform	ug / L	10/19/2011	<1	<1		<5
Chloroform	ug / L	3/13/2012	<5	<1		<5
Chloroform	ug / L	4/3/2012	<1	<1		<5
Chloroform	ug / L	5/16/2012	<1	<1	<1	
Chloroform	ug / L	6/15/2012	<1	<1	<1	
Chloroform	ug / L	7/16/2012	<1	<1	<1	<5
Chloroform	ug / L	8/9/2012	<1	<1	<1	
Chloroform	ug / L	9/13/2012	<1	<1	<1	
Chloroform	ug / L	10/2/2012	<1	<1	<1	<5
Chloromethane	ug / L	3/25/2009	< 1			< 10
Chloromethane	ug / L	5/1/2009	< 1		< 5	
Chloromethane	ug / L	6/30/2009	< 1		< 5	< 10
Chloromethane	ug / L	7/29/2009	< 1		< 5	< 5
Chloromethane	ug / L	9/2/2009	1.2		< 5	
Chloromethane	ug / L	12/1/2009				<5
Chloromethane	ug / L	9/14/2010	<1	<1	<5	
Chloromethane	ug / L	9/2/2010	<1	<1	<5	
Chloromethane	ug / L	10/15/2010	<1	<1	<5	<5
Chloromethane	ug / L	4/26/2010	<1	<1	<5	
Chloromethane	ug / L	5/17/2010	<1	<1	<5	
Chloromethane	ug / L	3/18/2010	<1	<1		<5
Chloromethane	ug / L	6/29/2010	<1	<1	<5	<5
Chloromethane	ug / L	7/27/2010	<1	<1	<5	<5
Chloromethane	ug / L	5/11/2011	<1	<1		<5
Chloromethane	ug / L	6/30/2011	<1	<1		<5
Chloromethane	ug / L	7/28/2011	<1	<1		<5
Chloromethane	ug / L	9/1/2011	<1	<1		<5
Chloromethane	ug / L	10/19/2011	<1	<1		<5
Chloromethane	ug / L	3/13/2012	<20	<4		<20
Chloromethane	ug / L	4/3/2012	<4	<4		<20
Chloromethane	ug / L	5/16/2012	<4	<4	<4	
Chloromethane	ug / L	6/15/2012	<4	<4	<4	
Chloromethane	ug / L	7/16/2012	<4	<4	<4	<20
Chloromethane	ug / L	8/9/2012	<4	<4	<4	
Chloromethane	ug / L	9/13/2012	<4	<4	<4	
Chloromethane	ug / L	10/2/2012	<4	<4	<4	<20
Cis-1,2-Dichloroethylene	ug / L	3/25/2009	< 1			< 10
Cis-1,2-Dichloroethylene	ug / L	5/1/2009	< 1		< 5	
Cis-1,2-Dichloroethylene	ug / L	6/30/2009	< 1		< 5	< 10
Cis-1,2-Dichloroethylene	ug / L	7/29/2009	< 1		< 5	< 5
Cis-1,2-Dichloroethylene	ug / L	9/2/2009	< 1		< 5	
Cis-1,2-Dichloroethylene	ug / L	12/1/2009				<5
Cis-1,2-Dichloroethylene	ug / L	9/14/2010	<0.5	<0.5	<2.5	
Cis-1,2-Dichloroethylene	ug / L	9/2/2010	<0.5	<0.5	<2.5	
Cis-1,2-Dichloroethylene	ug / L	10/15/2010	<0.5	<0.5	<2.5	<2.5
Cis-1,2-Dichloroethylene	ug / L	4/26/2010	<0.5	<0.5	<2.5	
Cis-1,2-Dichloroethylene	ug / L	5/17/2010	<0.5	<0.5	<2.5	
Cis-1,2-Dichloroethylene	ug / L	3/18/2010	<0.5	<0.5		<5
Cis-1,2-Dichloroethylene	ug / L	6/29/2010	<0.5	<0.5	<2.5	<2.5
Cis-1,2-Dichloroethylene	ug / L	7/27/2010	<0.5	<0.5	<2.5	<2.5

Parameter	Units	Date	Leachate Field Blank	Leachate Trip Blank	Treated Leachate	Untreated Leachate
Cis-1,2-Dichloroethylene	ug / L	5/11/2011	<0.5	<0.5		<2.5
Cis-1,2-Dichloroethylene	ug / L	6/30/2011	<0.5	<0.5		<2.5
Cis-1,2-Dichloroethylene	ug / L	7/28/2011	<0.5	<0.5		<2.5
Cis-1,2-Dichloroethylene	ug / L	9/1/2011	<0.5	<0.5		<2.5
Cis-1,2-Dichloroethylene	ug / L	10/19/2011	<0.5	<0.5		<2.5
Cis-1,2-Dichloroethene	ug / L	3/13/2012	<5	<1		<5
Cis-1,2-Dichloroethene	ug / L	4/3/2012	<1	<1		<5
Cis-1,2-Dichloroethene	ug / L	5/16/2012	<1	<1	<1	
Cis-1,2-Dichloroethene	ug / L	6/15/2012	<1	<1	<1	
Cis-1,2-Dichloroethene	ug / L	7/16/2012	<1	<1	<1	<5
Cis-1,2-Dichloroethene	ug / L	8/9/2012	<1	<1	<1	
Cis-1,2-Dichloroethene	ug / L	9/13/2012	<1	<1	<1	
Cis-1,2-Dichloroethene	ug / L	10/2/2012	<1	<1	<1	<5
Cis-1,3-Dichloropropene	ug / L	3/25/2009	< 1			< 10
Cis-1,3-Dichloropropene	ug / L	5/1/2009	< 1		< 5	
Cis-1,3-Dichloropropene	ug / L	6/30/2009	< 1		< 5	< 10
Cis-1,3-Dichloropropene	ug / L	7/29/2009	< 1		< 5	< 5
Cis-1,3-Dichloropropene	ug / L	9/2/2009	< 1		< 5	
Cis-1,3-Dichloropropene	ug / L	12/1/2009				<5
Cis-1,3-Dichloropropene	ug / L	9/14/2010	<0.5	<0.5	<2.5	
Cis-1,3-Dichloropropene	ug / L	9/2/2010	<0.5	<0.5	<2.5	
Cis-1,3-Dichloropropene	ug / L	10/15/2010	<0.5	<0.5	<2.5	<2.5
Cis-1,3-Dichloropropene	ug / L	4/26/2010	<0.5	<0.5	<2.5	
Cis-1,3-Dichloropropene	ug / L	5/17/2010	<0.5	<0.5	<2.5	
Cis-1,3-Dichloropropene	ug / L	3/18/2010	<0.5	<0.5		<5
Cis-1,3-Dichloropropene	ug / L	6/29/2010	<0.5	<0.5	<2.5	<2.5
Cis-1,3-Dichloropropene	ug / L	7/27/2010	<0.5	<0.5	<2.5	<2.5
Cis-1,3-Dichloropropene	ug / L	5/11/2011	<0.5	<0.5		<2.5
Cis-1,3-Dichloropropene	ug / L	6/30/2011	<0.5	<0.5		<2.5
Cis-1,3-Dichloropropene	ug / L	7/28/2011	<0.5	<0.5		<2.5
Cis-1,3-Dichloropropene	ug / L	9/1/2011	<0.5	<0.5		<2.5
Cis-1,3-Dichloropropene	ug / L	10/19/2011	<0.5	<0.5		<2.5
Cis-1,3-Dichloropropene	ug / L	3/13/2012	<20	<4		<20
Cis-1,3-Dichloropropene	ug / L	4/3/2012	<4	<4		<20
Cis-1,3-Dichloropropene	ug / L	5/16/2012	<4	<4	<4	
Cis-1,3-Dichloropropene	ug / L	6/15/2012	<4	<4	<4	
Cis-1,3-Dichloropropene	ug / L	7/16/2012	<4	<4	<4	<20
Cis-1,3-Dichloropropene	ug / L	8/9/2012	<4	<4	<4	
Cis-1,3-Dichloropropene	ug / L	9/13/2012	<4	<4	<4	
Cis-1,3-Dichloropropene	ug / L	10/2/2012	<4	<4	<4	<20
Dibromochloromethane	ug / L	3/25/2009	< 1			< 10
Dibromochloromethane	ug / L	5/1/2009	< 1		< 5	
Dibromochloromethane	ug / L	6/30/2009	< 1		< 5	< 10
Dibromochloromethane	ug / L	7/29/2009	< 1		< 5	< 5
Dibromochloromethane	ug / L	9/2/2009	< 1		< 5	
Dibromochloromethane	ug / L	12/1/2009				<5
Dibromochloromethane	ug / L	9/14/2010	<1	<1	<5	
Dibromochloromethane	ug / L	9/2/2010	<1	<1	<5	
Dibromochloromethane	ug / L	10/15/2010	<1	<1	<5	<5
Dibromochloromethane	ug / L	4/26/2010	<1	<1	<5	
Dibromochloromethane	ug / L	5/17/2010	<1	<1	<5	
Dibromochloromethane	ug / L	3/18/2010	<1	<1		<5
Dibromochloromethane	ug / L	6/29/2010	<1	<1	<5	<5
Dibromochloromethane	ug / L	7/27/2010	<1	<1	<5	<5
Dibromochloromethane	ug / L	5/11/2011	<1	<1		<5
Dibromochloromethane	ug / L	6/30/2011	<1	<1		<5
Dibromochloromethane	ug / L	7/28/2011	<1	<1		<5
Dibromochloromethane	ug / L	9/1/2011	<1	<1		<5
Dibromochloromethane	ug / L	10/19/2011	<1	<1		<5
Dibromochloromethane	ug / L	3/13/2012	<5	<1		<5
Dibromochloromethane	ug / L	4/3/2012	<1	<1		<5
Dibromochloromethane	ug / L	5/16/2012	<1	<1	<1	
Dibromochloromethane	ug / L	6/15/2012	<1	<1	<1	
Dibromochloromethane	ug / L	7/16/2012	<1	<1	<1	<5
Dibromochloromethane	ug / L	8/9/2012	<1	<1	<1	
Dibromochloromethane	ug / L	9/13/2012	<1	<1	<1	
Dibromochloromethane	ug / L	10/2/2012	<1	<1	<1	<5

Parameter	Units	Date	Leachate Field Blank	Leachate Trip Blank	Treated Leachate	Untreated Leachate
Dibromomethane	ug / L	3/25/2009	< 1			< 10
Dibromomethane	ug / L	5/1/2009	< 1		< 5	
Dibromomethane	ug / L	6/30/2009	< 1		< 5	< 10
Dibromomethane	ug / L	7/29/2009	< 1		< 5	< 5
Dibromomethane	ug / L	9/2/2009	< 1		< 5	
Dibromomethane	ug / L	12/1/2009				<5
Dibromomethane	ug / L	9/14/2010	<1	<1	<5	
Dibromomethane	ug / L	9/2/2010	<1	<1	<5	
Dibromomethane	ug / L	10/15/2010	<1	<1	<5	<5
Dibromomethane	ug / L	4/26/2010	<1	<1	<5	
Dibromomethane	ug / L	5/17/2010	<1	<1	<5	
Dibromomethane	ug / L	3/18/2010	<1	<1		<5
Dibromomethane	ug / L	6/29/2010	<1	<1	<5	<5
Dibromomethane	ug / L	7/27/2010	<1	<1	<5	<5
Dibromomethane	ug / L	5/11/2011	<1	<1		<5
Dibromomethane	ug / L	6/30/2011	<1	<1		<5
Dibromomethane	ug / L	7/28/2011	<1	<1		<5
Dibromomethane	ug / L	9/1/2011	<1	<1		<5
Dibromomethane	ug / L	10/19/2011	<1	<1		<5
Dibromomethane	ug / L	3/13/2012	<20	<4		<20
Dibromomethane	ug / L	4/3/2012	<4	<4		<20
Dibromomethane	ug / L	5/16/2012	<4	<4	<4	
Dibromomethane	ug / L	6/15/2012	<4	<4	<4	
Dibromomethane	ug / L	7/16/2012	<4	<4	<4	<20
Dibromomethane	ug / L	8/9/2012	<4	<4	<4	
Dibromomethane	ug / L	9/13/2012	<4	<4	<4	
Dibromomethane	ug / L	10/2/2012	<4	<4	<4	<20
Dichlorodifluoromethane	ug / L	3/25/2009	< 2			< 20
Dichlorodifluoromethane	ug / L	5/1/2009	< 2		< 10	
Dichlorodifluoromethane	ug / L	6/30/2009	< 2		< 10	< 20
Dichlorodifluoromethane	ug / L	7/29/2009	< 2		< 10	< 10
Dichlorodifluoromethane	ug / L	9/2/2009	< 2		< 10	
Dichlorodifluoromethane	ug / L	12/1/2009				<10
Dichlorodifluoromethane	ug / L	9/14/2010	<2	<2	<10	
Dichlorodifluoromethane	ug / L	9/2/2010	<2	<2	<10	
Dichlorodifluoromethane	ug / L	10/15/2010	<2	<2	<10	<10
Dichlorodifluoromethane	ug / L	4/26/2010	<2	<2	<10	
Dichlorodifluoromethane	ug / L	5/17/2010	<2	<2	<10	
Dichlorodifluoromethane	ug / L	3/18/2010	<2	<2		<10
Dichlorodifluoromethane	ug / L	6/29/2010	<2	<2	<10	<10
Dichlorodifluoromethane	ug / L	7/27/2010	<2	<2	<10	<10
Dichlorodifluoromethane	ug / L	5/11/2011	<2	<2		<10
Dichlorodifluoromethane	ug / L	6/30/2011	<2	<2		<10
Dichlorodifluoromethane	ug / L	7/28/2011	<2	<2		<10
Dichlorodifluoromethane	ug / L	9/1/2011	<2	<2		<10
Dichlorodifluoromethane	ug / L	10/19/2011	<2	<2		<10
Dichlorodifluoromethane	ug / L	3/13/2012	<5	<1		<5
Dichlorodifluoromethane	ug / L	4/3/2012	<1	<1		<5
Dichlorodifluoromethane	ug / L	5/16/2012	<1	<1	<1	
Dichlorodifluoromethane	ug / L	6/15/2012	<1	<1	<1	
Dichlorodifluoromethane	ug / L	7/16/2012	<1	<1	<1	<5
Dichlorodifluoromethane	ug / L	8/9/2012	<1	<1	<1	
Dichlorodifluoromethane	ug / L	9/13/2012	<1	<1	<1	
Dichlorodifluoromethane	ug / L	10/2/2012	<1	<1	<1	<5
Dichlorofluoromethane	ug / L	3/25/2009	< 1			< 10
Dichlorofluoromethane	ug / L	5/1/2009	< 1		< 5	
Dichlorofluoromethane	ug / L	6/30/2009	< 1		< 5	< 10
Dichlorofluoromethane	ug / L	7/29/2009	< 1		< 5	< 5
Dichlorofluoromethane	ug / L	9/2/2009	< 1		< 5	
Dichlorofluoromethane	ug / L	12/1/2009				<5
Dichlorofluoromethane	ug / L	9/14/2010	<0.5	<0.5	<2.5	
Dichlorofluoromethane	ug / L	9/2/2010	<0.5	<0.5	<2.5	
Dichlorofluoromethane	ug / L	10/15/2010	<0.5	<0.5	<2.5	<2.5
Dichlorofluoromethane	ug / L	4/26/2010	<0.5	<0.5	<2.5	
Dichlorofluoromethane	ug / L	5/17/2010	<0.5	<0.5	<2.5	
Dichlorofluoromethane	ug / L	3/18/2010	<0.5	<0.5		12
Dichlorofluoromethane	ug / L	6/29/2010	<0.5	<0.5	<2.5	<2.5
Dichlorofluoromethane	ug / L	7/27/2010	<0.5	<0.5	<2.5	<2.5

Parameter	Units	Date	Leachate Field Blank	Leachate Trip Blank	Treated Leachate	Untreated Leachate
Dichlorofluoromethane	ug / L	5/11/2011	<0.5	<0.5		<2.5
Dichlorofluoromethane	ug / L	6/30/2011	<0.5	<0.5		<2.5
Dichlorofluoromethane	ug / L	7/28/2011	<0.5	<0.5		<2.5
Dichlorofluoromethane	ug / L	9/1/2011	<0.5	<0.5		<2.5
Dichlorofluoromethane	ug / L	10/19/2011	<0.5	<0.5		<2.5
Dichlorofluoromethane	ug / L	3/13/2012	<5	<1		<5
Dichlorofluoromethane	ug / L	4/3/2012	<1	<1		<5
Dichlorofluoromethane	ug / L	5/16/2012	<1	<1	<1	
Dichlorofluoromethane	ug / L	6/15/2012	<1	<1	<1	
Dichlorofluoromethane	ug / L	7/16/2012	<1	<1	<1	<5
Dichlorofluoromethane	ug / L	8/9/2012	<1	<1	<1	
Dichlorofluoromethane	ug / L	9/13/2012	<1	<1	<1	
Dichlorofluoromethane	ug / L	10/2/2012	<1	<1	<1	<5
Ethyl Benzene	ug / L	3/25/2009	< 1			16
Ethyl Benzene	ug / L	5/1/2009	< 1		< 5	
Ethyl Benzene	ug / L	6/30/2009	< 1		< 5	26
Ethyl Benzene	ug / L	7/29/2009	< 1		< 5	30
Ethyl Benzene	ug / L	9/2/2009	< 1		< 5	
Ethyl Benzene	ug / L	12/1/2009				<5
Ethyl Benzene	ug / L	9/14/2010	<1	<1	<5	
Ethyl Benzene	ug / L	9/2/2010	<1	<1	<5	
Ethyl Benzene	ug / L	10/15/2010	<1	<1	<5	<5
Ethyl Benzene	ug / L	4/26/2010	<1	<1	<5	
Ethyl Benzene	ug / L	5/17/2010	<1	<1	<5	
Ethyl Benzene	ug / L	3/18/2010	<1	<1		17
Ethyl Benzene	ug / L	6/29/2010	<1	<1	<5	24
Ethyl Benzene	ug / L	7/27/2010	<1	<1	5.1	15
Ethyl Benzene	ug / L	5/11/2011	<1	<1		21
Ethyl Benzene	ug / L	6/30/2011	<1	<1		20
Ethyl Benzene	ug / L	7/28/2011	<1	<1		<5
Ethyl Benzene	ug / L	9/1/2011	<1	<1		<5
Ethyl Benzene	ug / L	10/19/2011	<1	<1		<5
Ethyl Benzene	ug / L	3/13/2012	8.1	<1		7.6
Ethyl Benzene	ug / L	4/3/2012	<1	<1		8.1
Ethyl Benzene	ug / L	5/16/2012	<1	<1	<1	
Ethyl Benzene	ug / L	6/15/2012	<1	<1	<1	
Ethyl Benzene	ug / L	7/16/2012	<1	<1	<1	<5
Ethyl Benzene	ug / L	8/9/2012	<1	<1	<1	
Ethyl Benzene	ug / L	9/13/2012	<1	<1	<1	
Ethyl Benzene	ug / L	10/2/2012	<1	<1	<1	16.8
Ethyl Ether	ug / L	3/25/2009	< 2			32
Ethyl Ether	ug / L	5/1/2009	< 2		< 10	
Ethyl Ether	ug / L	6/30/2009	< 2		< 10	39
Ethyl Ether	ug / L	7/29/2009	< 2		< 10	94
Ethyl Ether	ug / L	9/2/2009	< 2		< 10	
Ethyl Ether	ug / L	12/1/2009				<10
Ethyl Ether	ug / L	9/14/2010	<2	<2	<10	
Ethyl Ether	ug / L	9/2/2010	<2	<2	<10	
Ethyl Ether	ug / L	10/15/2010	<2	<2	<10	<10
Ethyl Ether	ug / L	4/26/2010	<2	<2	<10	
Ethyl Ether	ug / L	5/17/2010	<2	<2	<10	
Ethyl Ether	ug / L	3/18/2010	<2	<2		130
Ethyl Ether	ug / L	6/29/2010	<2	<2	<10	70
Ethyl Ether	ug / L	7/27/2010	<2	<2	30	26
Ethyl Ether	ug / L	5/11/2011	<2	<2		59
Ethyl Ether	ug / L	6/30/2011	<2	<2		65
Ethyl Ether	ug / L	7/28/2011	<2	<2		<10
Ethyl Ether	ug / L	9/1/2011	<2	<2		<10
Ethyl Ether	ug / L	10/19/2011	<2	<2		<10
Ethyl Ether	ug / L	3/13/2012	<20	<4		<20
Ethyl Ether	ug / L	4/3/2012	<4	<4		<20
Ethyl Ether	ug / L	5/16/2012	<4	<4	<4	
Ethyl Ether	ug / L	6/15/2012	<4	<4	<4	
Ethyl Ether	ug / L	7/16/2012	<4	<4	<4	36.9
Ethyl Ether	ug / L	8/9/2012	<4	<4	<4	
Ethyl Ether	ug / L	9/13/2012	<4	<4	<4	
Ethyl Ether	ug / L	10/2/2012	<4	<4	<4	41.4

Parameter	Units	Date	Leachate Field Blank	Leachate Trip Blank	Treated Leachate	Untreated Leachate
Hexachlorobutadiene	ug / L	3/25/2009	< 2			< 20
Hexachlorobutadiene	ug / L	5/1/2009	< 2		< 10	
Hexachlorobutadiene	ug / L	6/30/2009	< 2		< 10	< 20
Hexachlorobutadiene	ug / L	7/29/2009	< 2		< 10	< 10
Hexachlorobutadiene	ug / L	9/2/2009	< 2		< 10	
Hexachlorobutadiene	ug / L	12/1/2009				<10
Hexachlorobutadiene	ug / L	9/14/2010	<1	<1	<5	
Hexachlorobutadiene	ug / L	9/2/2010	<1	<1	<5	
Hexachlorobutadiene	ug / L	10/15/2010	<1	<1	<5	<5
Hexachlorobutadiene	ug / L	4/26/2010	<1	<1	<5	
Hexachlorobutadiene	ug / L	5/17/2010	<1	<1	<5	
Hexachlorobutadiene	ug / L	3/18/2010	<1	<1		<10
Hexachlorobutadiene	ug / L	6/29/2010	<1	<1	<5	<5
Hexachlorobutadiene	ug / L	7/27/2010	<1	<1	<5	<5
Hexachlorobutadiene	ug / L	5/11/2011	<1	<1		<5
Hexachlorobutadiene	ug / L	6/30/2011	<1	<1		<5
Hexachlorobutadiene	ug / L	7/28/2011	<1	<1		<5
Hexachlorobutadiene	ug / L	9/1/2011	<1	<1		<5
Hexachlorobutadiene	ug / L	10/19/2011	<1	<1		<5
Hexachloro-1,3-butadiene	ug / L	3/13/2012	<25	<5		<25
Hexachloro-1,3-butadiene	ug / L	4/3/2012	<5	<5		<25
Hexachloro-1,3-butadiene	ug / L	5/16/2012	<5	<5	<5	
Hexachloro-1,3-butadiene	ug / L	6/15/2012	<5	<5	<5	
Hexachloro-1,3-butadiene	ug / L	7/16/2012	<5	<5	<5	<25
Hexachloro-1,3-butadiene	ug / L	8/9/2012	<5	<5	<5	
Hexachloro-1,3-butadiene	ug / L	9/13/2012	<5	<5	<5	
Hexachloro-1,3-butadiene	ug / L	10/2/2012	<5	<5	<5	<25
Isopropylbenzene	ug / L	3/25/2009	< 1			< 10
Isopropylbenzene	ug / L	5/1/2009	< 1		< 5	
Isopropylbenzene	ug / L	6/30/2009	< 1		< 5	< 10
Isopropylbenzene	ug / L	7/29/2009	< 1		< 5	< 5
Isopropylbenzene	ug / L	9/2/2009	< 1		< 5	
Isopropylbenzene	ug / L	12/1/2009				<5
Isopropylbenzene	ug / L	9/14/2010	<1	<1	<5	
Isopropylbenzene	ug / L	9/2/2010	<1	<1	<5	
Isopropylbenzene	ug / L	10/15/2010	<1	<1	<5	<5
Isopropylbenzene	ug / L	4/26/2010	<1	<1	<5	
Isopropylbenzene	ug / L	5/17/2010	<1	<1	<5	
Isopropylbenzene	ug / L	3/18/2010	<1	<1		6.2
Isopropylbenzene	ug / L	6/29/2010	<1	<1	<5	<5
Isopropylbenzene	ug / L	7/27/2010	<1	<1	<5	<5
Isopropylbenzene	ug / L	5/11/2011	<1	<1		<5
Isopropylbenzene	ug / L	6/30/2011	<1	<1		<5
Isopropylbenzene	ug / L	7/28/2011	<1	<1		<5
Isopropylbenzene	ug / L	9/1/2011	<1	<1		<5
Isopropylbenzene	ug / L	10/19/2011	<1	<1		<5
Isopropylbenzene	ug / L	3/13/2012	<5	<1		<5
Isopropylbenzene	ug / L	4/3/2012	<1	<1		<5
Isopropylbenzene	ug / L	5/16/2012	<1	<1	<1	
Isopropylbenzene	ug / L	6/15/2012	<1	<1	<1	
Isopropylbenzene	ug / L	7/16/2012	<1	<1	<1	<5
Isopropylbenzene	ug / L	8/9/2012	<1	<1	<1	
Isopropylbenzene	ug / L	9/13/2012	<1	<1	<1	
Isopropylbenzene	ug / L	10/2/2012	<1	<1	<1	<5
Methyl Ethyl Ketone	ug / L	3/25/2009	< 10			1100
Methyl Ethyl Ketone	ug / L	5/1/2009	< 10		< 50	
Methyl Ethyl Ketone	ug / L	6/30/2009	< 10		< 50	< 100
Methyl Ethyl Ketone	ug / L	7/29/2009	< 10		< 50	< 50
Methyl Ethyl Ketone	ug / L	9/2/2009	< 10		< 50	
Methyl Ethyl Ketone	ug / L	12/1/2009				<50
Methyl Ethyl Ketone	ug / L	9/14/2010	<5	<5	<25	
Methyl Ethyl Ketone	ug / L	9/2/2010	<5	<5	<25	
Methyl Ethyl Ketone	ug / L	10/15/2010	<5	<5	<25	<25
Methyl Ethyl Ketone	ug / L	4/26/2010	<5	<5	<25	
Methyl Ethyl Ketone	ug / L	5/17/2010	<5	<5	<25	
Methyl Ethyl Ketone	ug / L	3/18/2010	<5	<5		260
Methyl Ethyl Ketone	ug / L	6/29/2010	<5	<5	36	<25
Methyl Ethyl Ketone	ug / L	7/27/2010	<5	<5	230	62

Parameter	Units	Date	Leachate Field Blank	Leachate Trip Blank	Treated Leachate	Untreated Leachate
Methyl Ethyl Ketone	ug / L	5/11/2011	<5	<5		<25
Methyl Ethyl Ketone	ug / L	6/30/2011	<5	<5		<25
Methyl Ethyl Ketone	ug / L	7/28/2011	<5	<5		<25
Methyl Ethyl Ketone	ug / L	9/1/2011	<5	<5		<25
Methyl Ethyl Ketone	ug / L	10/19/2011	<5	<5		<25
Methyl Ethyl Ketone (2-Butanone)	ug / L	3/13/2012	<20	<4		<20
Methyl Ethyl Ketone (2-Butanone)	ug / L	4/3/2012	<4	<4		<20
Methyl Ethyl Ketone (2-Butanone)	ug / L	5/16/2012	<4	<4	<4	
Methyl Ethyl Ketone (2-Butanone)	ug / L	6/15/2012	<4	<4	<4	
Methyl Ethyl Ketone (2-Butanone)	ug / L	7/16/2012	<4	<4	<4	113
Methyl Ethyl Ketone (2-Butanone)	ug / L	8/9/2012	<4	<4	<4	
Methyl Ethyl Ketone (2-Butanone)	ug / L	9/13/2012	<4	<4	<4	
Methyl Ethyl Ketone (2-Butanone)	ug / L	10/2/2012	<4	<4	4.4	2730
Methyl Isobutyl Ketone	ug / L	3/25/2009	< 10			< 100
Methyl Isobutyl Ketone	ug / L	5/1/2009	< 10		< 50	
Methyl Isobutyl Ketone	ug / L	6/30/2009	< 10		< 50	< 100
Methyl Isobutyl Ketone	ug / L	7/29/2009	< 10		< 50	< 50
Methyl Isobutyl Ketone	ug / L	9/2/2009	< 10		< 50	
Methyl Isobutyl Ketone	ug / L	12/1/2009				<50
Methyl Isobutyl Ketone	ug / L	9/14/2010	<5	<5	<25	
Methyl Isobutyl Ketone	ug / L	9/2/2010	<5	<5	<25	
Methyl Isobutyl Ketone	ug / L	10/15/2010	<5	<5	<25	<25
Methyl Isobutyl Ketone	ug / L	4/26/2010	<5	<5	<25	
Methyl Isobutyl Ketone	ug / L	5/17/2010	<5	<5	<25	
Methyl Isobutyl Ketone	ug / L	3/18/2010	<5	<5		<50
Methyl Isobutyl Ketone	ug / L	6/29/2010	<5	<5	<25	<25
Methyl Isobutyl Ketone	ug / L	7/27/2010	<5	<5	<25	<25
Methyl Isobutyl Ketone	ug / L	5/11/2011	<5	<5		<25
Methyl Isobutyl Ketone	ug / L	6/30/2011	<5	<5		<25
Methyl Isobutyl Ketone	ug / L	7/28/2011	<5	<5		<25
Methyl Isobutyl Ketone	ug / L	9/1/2011	<5	<5		<25
Methyl Isobutyl Ketone	ug / L	10/19/2011	<5	<5		<25
Methyl Isobutyl Ketone (4-Methyl-2-pentanone)	ug / L	3/13/2012	<20	<4		<20
Methyl Isobutyl Ketone (4-Methyl-2-pentanone)	ug / L	4/3/2012	<4	<4		<20
Methyl Isobutyl Ketone (4-Methyl-2-pentanone)	ug / L	5/16/2012	<4	<4	<4	
Methyl Isobutyl Ketone (4-Methyl-2-pentanone)	ug / L	6/15/2012	<4	<4	<4	
Methyl Isobutyl Ketone (4-Methyl-2-pentanone)	ug / L	7/16/2012	<4	<4	<4	<20
Methyl Isobutyl Ketone (4-Methyl-2-pentanone)	ug / L	8/9/2012	<4	<4	<4	
Methyl Isobutyl Ketone (4-Methyl-2-pentanone)	ug / L	9/13/2012	<4	<4	<4	
Methyl Isobutyl Ketone (4-Methyl-2-pentanone)	ug / L	10/2/2012	<4	<4	<4	29.1
Methyl Tert-butyl Ether	ug / L	3/25/2009	< 1			< 10
Methyl Tert-butyl Ether	ug / L	5/1/2009	< 1		< 5	
Methyl Tert-butyl Ether	ug / L	6/30/2009	< 1		< 5	< 10
Methyl Tert-butyl Ether	ug / L	7/29/2009	< 1		< 5	< 5
Methyl Tert-butyl Ether	ug / L	9/2/2009	< 1		< 5	
Methyl Tert-butyl Ether	ug / L	12/1/2009				<5
Methyl Tert-butyl Ether	ug / L	9/14/2010	<1	<1	<5	
Methyl Tert-butyl Ether	ug / L	9/2/2010	<1	<1	<5	
Methyl Tert-butyl Ether	ug / L	10/15/2010	<1	<1	<5	<5
Methyl Tert-butyl Ether	ug / L	4/26/2010	<1	<1	<5	
Methyl Tert-butyl Ether	ug / L	5/17/2010	<1	<1	<5	
Methyl Tert-butyl Ether	ug / L	3/18/2010	<1	<1		<5
Methyl Tert-butyl Ether	ug / L	6/29/2010	<1	<1	<5	<5
Methyl Tert-butyl Ether	ug / L	7/27/2010	<1	<1	<5	<5
Methyl Tert-butyl Ether	ug / L	5/11/2011	<1	<1		<5
Methyl Tert-butyl Ether	ug / L	6/30/2011	<1	<1		<5
Methyl Tert-butyl Ether	ug / L	7/28/2011	<1	<1		<5
Methyl Tert-butyl Ether	ug / L	9/1/2011	<1	<1		<5
Methyl Tert-butyl Ether	ug / L	10/19/2011	<1	<1		<5
Methyl Tert-butyl Ether	ug / L	3/13/2012	<5	<1		<5
Methyl Tert-butyl Ether	ug / L	4/3/2012	<1	<1		<5
Methyl Tert-butyl Ether	ug / L	5/16/2012	<1	<1	<1	
Methyl Tert-butyl Ether	ug / L	6/15/2012	<1	<1	<1	
Methyl Tert-butyl Ether	ug / L	7/16/2012	<1	<1	<1	<5
Methyl Tert-butyl Ether	ug / L	8/9/2012	<1	<1	<1	
Methyl Tert-butyl Ether	ug / L	9/13/2012	<1	<1	<1	
Methyl Tert-butyl Ether	ug / L	10/2/2012	<1	<1	<1	<5

Parameter	Units	Date	Leachate Field Blank	Leachate Trip Blank	Treated Leachate	Untreated Leachate
Methylene Chloride	ug / L	3/25/2009	< 1			< 10
Methylene Chloride	ug / L	5/1/2009	< 1		< 5	
Methylene Chloride	ug / L	6/30/2009	< 1		< 5	< 10
Methylene Chloride	ug / L	7/29/2009	< 1		< 5	< 5
Methylene Chloride	ug / L	9/2/2009	< 1		< 5	
Methylene Chloride	ug / L	12/1/2009				<5
Methylene Chloride	ug / L	9/14/2010	<1	<1	<5	
Methylene Chloride	ug / L	9/2/2010	<1	<1	<5	
Methylene Chloride	ug / L	10/15/2010	<1	<1	<5	<5
Methylene Chloride	ug / L	4/26/2010	<1	<1	<5	
Methylene Chloride	ug / L	5/17/2010	<1	<1	<5	
Methylene Chloride	ug / L	3/18/2010	5.5	<1		<5
Methylene Chloride	ug / L	6/29/2010	<1	<1	<5	<5
Methylene Chloride	ug / L	7/27/2010	<1	<1	<5	<5
Methylene Chloride	ug / L	5/11/2011	<1	<1		<5
Methylene Chloride	ug / L	6/30/2011	<1	<1		<5
Methylene Chloride	ug / L	7/28/2011	<1	<1		<5
Methylene Chloride	ug / L	9/1/2011	<1	<1		<5
Methylene Chloride	ug / L	10/19/2011	<1	<1		<5
Methylene Chloride	ug / L	3/13/2012	<20	<4		<20
Methylene Chloride	ug / L	4/3/2012	<4	<4		<20
Methylene Chloride	ug / L	5/16/2012	<4	<4	<4	
Methylene Chloride	ug / L	6/15/2012	<4	<4	<4	
Methylene Chloride	ug / L	7/16/2012	<4	<4	<4	<20
Methylene Chloride	ug / L	8/9/2012	<4	<4	<4	
Methylene Chloride	ug / L	9/13/2012	<4	<4	<4	
Methylene Chloride	ug / L	10/2/2012	<4	<4	<4	<20
Naphthalene	ug / L	3/25/2009	< 2			< 20
Naphthalene	ug / L	5/1/2009	< 2		< 10	
Naphthalene	ug / L	6/30/2009	< 2		< 10	< 20
Naphthalene	ug / L	7/29/2009	< 2		< 10	< 10
Naphthalene	ug / L	9/2/2009	< 2		< 10	
Naphthalene	ug / L	12/1/2009				<10
Naphthalene	ug / L	9/14/2010	<1	<1	<5	
Naphthalene	ug / L	9/2/2010	<1	<1	<5	
Naphthalene	ug / L	10/15/2010	<1	<1	<5	<5
Naphthalene	ug / L	4/26/2010	<1	<1	<5	
Naphthalene	ug / L	5/17/2010	<1	<1	<5	
Naphthalene	ug / L	3/18/2010	<1	<1		<10
Naphthalene	ug / L	6/29/2010	<1	<1	<5	9.3
Naphthalene	ug / L	7/27/2010	<1	<1	<5	5.4
Naphthalene	ug / L	5/11/2011	<1	<1		6.6
Naphthalene	ug / L	6/30/2011	<1	<1		<5
Naphthalene	ug / L	7/28/2011	<1	<1		<5
Naphthalene	ug / L	9/1/2011	<1	<1		<5
Naphthalene	ug / L	10/19/2011	<1	<1		<5
Naphthalene	ug / L	3/13/2012	<20	<4		<20
Naphthalene	ug / L	4/3/2012	<4	<4		<20
Naphthalene	ug / L	5/16/2012	<4	<4	<4	
Naphthalene	ug / L	6/15/2012	<4	<4	<4	
Naphthalene	ug / L	7/16/2012	<4	<4	<4	<20
Naphthalene	ug / L	8/9/2012	<4	<4	<4	
Naphthalene	ug / L	9/13/2012	<4	<4	<4	
Naphthalene	ug / L	10/2/2012	<4	<4	<4	<20
n-Butylbenzene	ug / L	3/25/2009	< 1			< 10
n-Butylbenzene	ug / L	5/1/2009	< 1		< 5	
n-Butylbenzene	ug / L	6/30/2009	< 1		< 5	< 10
n-Butylbenzene	ug / L	7/29/2009	< 1		< 5	< 5
n-Butylbenzene	ug / L	9/2/2009	< 1		< 5	
n-Butylbenzene	ug / L	12/1/2009				<5
n-Butylbenzene	ug / L	9/14/2010	<1	<1	<5	
n-Butylbenzene	ug / L	9/2/2010	<1	<1	<5	
n-Butylbenzene	ug / L	10/15/2010	<1	<1	<5	<5
n-Butylbenzene	ug / L	4/26/2010	<1	<1	<5	
n-Butylbenzene	ug / L	5/17/2010	<1	<1	<5	
n-Butylbenzene	ug / L	3/18/2010	<1	<1		<5
n-Butylbenzene	ug / L	6/29/2010	<1	<1	<5	<5
n-Butylbenzene	ug / L	7/27/2010	<1	<1	<5	<5

Parameter	Units	Date	Leachate Field Blank	Leachate Trip Blank	Treated Leachate	Untreated Leachate
n-Butylbenzene	ug / L	5/11/2011	<1	<1		<5
n-Butylbenzene	ug / L	6/30/2011	<1	<1		<5
n-Butylbenzene	ug / L	7/28/2011	<1	<1		<5
n-Butylbenzene	ug / L	9/1/2011	<1	<1		<5
n-Butylbenzene	ug / L	10/19/2011	<1	<1		<5
n-Butylbenzene	ug / L	3/13/2012	<5	<1		<5
n-Butylbenzene	ug / L	4/3/2012	<1	<1		<5
n-Butylbenzene	ug / L	5/16/2012	<1	<1	<1	
n-Butylbenzene	ug / L	6/15/2012	<1	<1	<1	
n-Butylbenzene	ug / L	7/16/2012	<1	<1	<1	<5
n-Butylbenzene	ug / L	8/9/2012	<1	<1	<1	
n-Butylbenzene	ug / L	9/13/2012	<1	<1	<1	
n-Butylbenzene	ug / L	10/2/2012	<1	<1	<1	<5
n-Propylbenzene	ug / L	3/25/2009	< 1			< 10
n-Propylbenzene	ug / L	5/1/2009	< 1		< 5	
n-Propylbenzene	ug / L	6/30/2009	< 1		< 5	< 10
n-Propylbenzene	ug / L	7/29/2009	< 1		< 5	< 5
n-Propylbenzene	ug / L	9/2/2009	< 1		< 5	
n-Propylbenzene	ug / L	12/1/2009				<5
n-Propylbenzene	ug / L	9/14/2010	<1	<1	<5	
n-Propylbenzene	ug / L	9/2/2010	<1	<1	<5	
n-Propylbenzene	ug / L	10/15/2010	<1	<1	<5	<5
n-Propylbenzene	ug / L	4/26/2010	<1	<1	<5	
n-Propylbenzene	ug / L	5/17/2010	<1	<1	<5	
n-Propylbenzene	ug / L	3/18/2010	<1	<1		<5
n-Propylbenzene	ug / L	6/29/2010	<1	<1	<5	<5
n-Propylbenzene	ug / L	7/27/2010	<1	<1	<5	<5
n-Propylbenzene	ug / L	5/11/2011	<1	<1		<5
n-Propylbenzene	ug / L	6/30/2011	<1	<1		<5
n-Propylbenzene	ug / L	7/28/2011	<1	<1		<5
n-Propylbenzene	ug / L	9/1/2011	<1	<1		<5
n-Propylbenzene	ug / L	10/19/2011	<1	<1		<5
n-Propylbenzene	ug / L	3/13/2012	8.9	<1		8.3
n-Propylbenzene	ug / L	4/3/2012	<1	<1		8.5
n-Propylbenzene	ug / L	5/16/2012	<1	<1	<1	
n-Propylbenzene	ug / L	6/15/2012	<1	<1	<1	
n-Propylbenzene	ug / L	7/16/2012	<1	<1	<1	<5
n-Propylbenzene	ug / L	8/9/2012	<1	<1	<1	
n-Propylbenzene	ug / L	9/13/2012	<1	<1	<1	
n-Propylbenzene	ug / L	10/2/2012	<1	<1	<1	<5
p-Isopropyltoluene	ug / L	3/25/2009	< 1			< 10
p-Isopropyltoluene	ug / L	5/1/2009	< 1		< 5	
p-Isopropyltoluene	ug / L	6/30/2009	< 1		< 5	< 10
p-Isopropyltoluene	ug / L	7/29/2009	< 1		< 5	< 5
p-Isopropyltoluene	ug / L	9/2/2009	< 1		< 5	
p-Isopropyltoluene	ug / L	12/1/2009				<5
p-Isopropyltoluene	ug / L	9/14/2010	<1	<1	<5	
p-Isopropyltoluene	ug / L	9/2/2010	<1	<1	<5	
p-Isopropyltoluene	ug / L	10/15/2010	<1	<1	<5	<5
p-Isopropyltoluene	ug / L	4/26/2010	<1	<1	<5	
p-Isopropyltoluene	ug / L	5/17/2010	<1	<1	<5	
p-Isopropyltoluene	ug / L	3/18/2010	<1	<1		<5
p-Isopropyltoluene	ug / L	6/29/2010	<1	<1	<5	<5
p-Isopropyltoluene	ug / L	7/27/2010	<1	<1	<5	<5
p-Isopropyltoluene	ug / L	5/11/2011	<1	<1		<5
p-Isopropyltoluene	ug / L	6/30/2011	<1	<1		<5
p-Isopropyltoluene	ug / L	7/28/2011	<1	<1		<5
p-Isopropyltoluene	ug / L	9/1/2011	<1	<1		<5
p-Isopropyltoluene	ug / L	10/19/2011	<1	<1		<5
p-Isopropyltoluene	ug / L	3/13/2012	<5	<1		<5
p-Isopropyltoluene	ug / L	4/3/2012	<1	<1		<5
p-Isopropyltoluene	ug / L	5/16/2012	<1	<1	<1	
p-Isopropyltoluene	ug / L	6/15/2012	<1	<1	<1	
p-Isopropyltoluene	ug / L	7/16/2012	<1	<1	<1	<5
p-Isopropyltoluene	ug / L	8/9/2012	<1	<1	<1	
p-Isopropyltoluene	ug / L	9/13/2012	<1	<1	<1	
p-Isopropyltoluene	ug / L	10/2/2012	<1	<1	<1	<5

Parameter	Units	Date	Leachate Field Blank	Leachate Trip Blank	Treated Leachate	Untreated Leachate
sec-Butylbenzene	ug / L	3/25/2009	< 1			< 10
sec-Butylbenzene	ug / L	5/1/2009	< 1		< 5	
sec-Butylbenzene	ug / L	6/30/2009	< 1		< 5	< 10
sec-Butylbenzene	ug / L	7/29/2009	< 1		< 5	< 5
sec-Butylbenzene	ug / L	9/2/2009	< 1		< 5	
sec-Butylbenzene	ug / L	12/1/2009				<5
sec-Butylbenzene	ug / L	9/14/2010	<1	<1	<5	
sec-Butylbenzene	ug / L	9/2/2010	<1	<1	<5	
sec-Butylbenzene	ug / L	10/15/2010	<1	<1	<5	<5
sec-Butylbenzene	ug / L	4/26/2010	<1	<1	<5	
sec-Butylbenzene	ug / L	5/17/2010	<1	<1	<5	
sec-Butylbenzene	ug / L	3/18/2010	<1	<1		<5
sec-Butylbenzene	ug / L	6/29/2010	<1	<1	<5	<5
sec-Butylbenzene	ug / L	7/27/2010	<1	<1	<5	<5
sec-Butylbenzene	ug / L	5/11/2011	<1	<1		<5
sec-Butylbenzene	ug / L	6/30/2011	<1	<1		<5
sec-Butylbenzene	ug / L	7/28/2011	<1	<1		<5
sec-Butylbenzene	ug / L	9/1/2011	<1	<1		<5
sec-Butylbenzene	ug / L	10/19/2011	<1	<1		<5
sec-Butylbenzene	ug / L	3/13/2012	<5	<1		<5
sec-Butylbenzene	ug / L	4/3/2012	<1	<1		<5
sec-Butylbenzene	ug / L	5/16/2012	<1	<1	<1	
sec-Butylbenzene	ug / L	6/15/2012	<1	<1	<1	
sec-Butylbenzene	ug / L	7/16/2012	<1	<1	<1	<5
sec-Butylbenzene	ug / L	8/9/2012	<1	<1	<1	
sec-Butylbenzene	ug / L	9/13/2012	<1	<1	<1	
sec-Butylbenzene	ug / L	10/2/2012	<1	<1	<1	<5
Styrene	ug / L	3/25/2009	< 1			< 10
Styrene	ug / L	5/1/2009	< 1		< 5	
Styrene	ug / L	6/30/2009	< 1		< 5	< 10
Styrene	ug / L	7/29/2009	< 1		< 5	< 5
Styrene	ug / L	9/2/2009	< 1		< 5	
Styrene	ug / L	12/1/2009				<5
Styrene	ug / L	9/14/2010	<1	<1	<5	
Styrene	ug / L	9/2/2010	<1	<1	<5	
Styrene	ug / L	10/15/2010	<1	<1	<5	<5
Styrene	ug / L	4/26/2010	<1	<1	<5	
Styrene	ug / L	5/17/2010	<1	<1	<5	
Styrene	ug / L	3/18/2010	<1	<1		<5
Styrene	ug / L	6/29/2010	<1	<1	<5	<5
Styrene	ug / L	7/27/2010	<1	<1	<5	<5
Styrene	ug / L	5/11/2011	<1	<1		<5
Styrene	ug / L	6/30/2011	<1	<1		<5
Styrene	ug / L	7/28/2011	<1	<1		<5
Styrene	ug / L	9/1/2011	<1	<1		<5
Styrene	ug / L	10/19/2011	<1	<1		<5
Styrene	ug / L	3/13/2012	<5	<1		<5
Styrene	ug / L	4/3/2012	<1	<1		<5
Styrene	ug / L	5/16/2012	<1	<1	<1	
Styrene	ug / L	6/15/2012	<1	<1	<1	
Styrene	ug / L	7/16/2012	<1	<1	<1	<5
Styrene	ug / L	8/9/2012	<1	<1	<1	
Styrene	ug / L	9/13/2012	<1	<1	<1	
Styrene	ug / L	10/2/2012	<1	<1	<1	<5
tert-Butylbenzene	ug / L	3/25/2009	< 1			< 10
tert-Butylbenzene	ug / L	5/1/2009	< 1		< 5	
tert-Butylbenzene	ug / L	6/30/2009	< 1		< 5	< 10
tert-Butylbenzene	ug / L	7/29/2009	< 1		< 5	< 5
tert-Butylbenzene	ug / L	9/2/2009	< 1		< 5	
tert-Butylbenzene	ug / L	12/1/2009				<5
tert-Butylbenzene	ug / L	9/14/2010	<1	<1	<5	
tert-Butylbenzene	ug / L	9/2/2010	<1	<1	<5	
tert-Butylbenzene	ug / L	10/15/2010	<1	<1	<5	<5
tert-Butylbenzene	ug / L	4/26/2010	<1	<1	<5	
tert-Butylbenzene	ug / L	5/17/2010	<1	<1	<5	
tert-Butylbenzene	ug / L	3/18/2010	<1	<1		<5
tert-Butylbenzene	ug / L	6/29/2010	<1	<1	<5	<5
tert-Butylbenzene	ug / L	7/27/2010	<1	<1	<5	<5

Parameter	Units	Date	Leachate Field Blank	Leachate Trip Blank	Treated Leachate	Untreated Leachate
tert-Butylbenzene	ug / L	5/11/2011	<1	<1		<5
tert-Butylbenzene	ug / L	6/30/2011	<1	<1		<5
tert-Butylbenzene	ug / L	7/28/2011	<1	<1		<5
tert-Butylbenzene	ug / L	9/1/2011	<1	<1		<5
tert-Butylbenzene	ug / L	10/19/2011	<1	<1		<5
tert-Butylbenzene	ug / L	3/13/2012	<5	<1		<5
tert-Butylbenzene	ug / L	4/3/2012	<1	<1		<5
tert-Butylbenzene	ug / L	5/16/2012	<1	<1	<1	
tert-Butylbenzene	ug / L	6/15/2012	<1	<1	<1	
tert-Butylbenzene	ug / L	7/16/2012	<1	<1	<1	<5
tert-Butylbenzene	ug / L	8/9/2012	<1	<1	<1	
tert-Butylbenzene	ug / L	9/13/2012	<1	<1	<1	
tert-Butylbenzene	ug / L	10/2/2012	<1	<1	<1	<5
Tetrachloroethylene	ug / L	3/25/2009	< 1			< 10
Tetrachloroethylene	ug / L	5/1/2009	< 1		< 5	
Tetrachloroethylene	ug / L	6/30/2009	< 1		< 5	< 10
Tetrachloroethylene	ug / L	7/29/2009	< 1		< 5	< 5
Tetrachloroethylene	ug / L	9/2/2009	< 1		< 5	
Tetrachloroethylene	ug / L	12/1/2009				<5
Tetrachloroethylene	ug / L	9/14/2010	<1	<1	<5	
Tetrachloroethylene	ug / L	9/2/2010	<1	<1	<5	
Tetrachloroethylene	ug / L	10/15/2010	<1	<1	<5	<5
Tetrachloroethylene	ug / L	4/26/2010	<1	<1	<5	
Tetrachloroethylene	ug / L	5/17/2010	<1	<1	<5	
Tetrachloroethylene	ug / L	3/18/2010	<1	<1		<5
Tetrachloroethylene	ug / L	6/29/2010	<1	<1	<5	<5
Tetrachloroethylene	ug / L	7/27/2010	<1	<1	<5	<5
Tetrachloroethylene	ug / L	5/11/2011	<1	<1		<5
Tetrachloroethylene	ug / L	6/30/2011	<1	<1		<5
Tetrachloroethylene	ug / L	7/28/2011	<1	<1		<5
Tetrachloroethylene	ug / L	9/1/2011	<1	<1		<5
Tetrachloroethylene	ug / L	10/19/2011	<1	<1		<5
Tetrachloroethene	ug / L	3/13/2012	<5	<1		<5
Tetrachloroethene	ug / L	4/3/2012	<1	<1		<5
Tetrachloroethene	ug / L	5/16/2012	<1	<1	<1	
Tetrachloroethene	ug / L	6/15/2012	<1	<1	<1	
Tetrachloroethene	ug / L	7/16/2012	<1	<1	<1	<5
Tetrachloroethene	ug / L	8/9/2012	<1	<1	<1	
Tetrachloroethene	ug / L	9/13/2012	<1	<1	<1	
Tetrachloroethene	ug / L	10/2/2012	<1	<1	<1	<5
Tetrahydrofuran	ug / L	3/25/2009	< 5			340
Tetrahydrofuran	ug / L	5/1/2009	< 5		< 25	
Tetrahydrofuran	ug / L	6/30/2009	< 5		26	360
Tetrahydrofuran	ug / L	7/29/2009	< 5		< 25	1200
Tetrahydrofuran	ug / L	9/2/2009	< 5		66	
Tetrahydrofuran	ug / L	12/1/2009				<25
Tetrahydrofuran	ug / L	9/14/2010	<5	<5	<25	
Tetrahydrofuran	ug / L	9/2/2010	<5	<5	<25	
Tetrahydrofuran	ug / L	10/15/2010	<5	<5	<25	<25
Tetrahydrofuran	ug / L	4/26/2010	<5	<5	<25	
Tetrahydrofuran	ug / L	5/17/2010	<5	<5	<25	
Tetrahydrofuran	ug / L	3/18/2010	<5	<5		500
Tetrahydrofuran	ug / L	6/29/2010	<5	<5	71	660
Tetrahydrofuran	ug / L	7/27/2010	<5	<5	190	58
Tetrahydrofuran	ug / L	5/11/2011	<5	<5		590
Tetrahydrofuran	ug / L	6/30/2011	<5	<5		<25
Tetrahydrofuran	ug / L	7/28/2011	<5	<5		<25
Tetrahydrofuran	ug / L	9/1/2011	<5	<5		<25
Tetrahydrofuran	ug / L	10/19/2011	<5	<5		<25
Tetrahydrofuran	ug / L	3/13/2012	<50	<10		<50
Tetrahydrofuran	ug / L	4/3/2012	<10	<10		<50
Tetrahydrofuran	ug / L	5/16/2012	<10	<10	<10	
Tetrahydrofuran	ug / L	6/15/2012	<10	<10	28.2	
Tetrahydrofuran	ug / L	7/16/2012	<10	<10	<10	230
Tetrahydrofuran	ug / L	8/9/2012	<10	<10	25.8	
Tetrahydrofuran	ug / L	9/13/2012	<10	<10	<10	
Tetrahydrofuran	ug / L	10/2/2012	<10	<10	<10	924

Parameter	Units	Date	Leachate Field Blank	Leachate Trip Blank	Treated Leachate	Untreated Leachate
Toluene	ug / L	3/25/2009	< 1			36
Toluene	ug / L	5/1/2009	< 1		< 5	
Toluene	ug / L	6/30/2009	< 1		< 5	12
Toluene	ug / L	7/29/2009	< 1		< 5	6.9
Toluene	ug / L	9/2/2009	< 1		< 5	
Toluene	ug / L	12/1/2009				<5
Toluene	ug / L	9/14/2010	<1	<1	<5	
Toluene	ug / L	9/2/2010	<1	<1	<5	
Toluene	ug / L	10/15/2010	<1	<1	<5	<5
Toluene	ug / L	4/26/2010	<1	<1	<5	
Toluene	ug / L	5/17/2010	<1	<1	<5	
Toluene	ug / L	3/18/2010	4	<1		46
Toluene	ug / L	6/29/2010	<1	<1	<5	5.6
Toluene	ug / L	7/27/2010	<1	<1	15	32
Toluene	ug / L	5/11/2011	<1	<1		<5
Toluene	ug / L	6/30/2011	<1	<1		<5
Toluene	ug / L	7/28/2011	<1	<1		<5
Toluene	ug / L	9/1/2011	<1	<1		<5
Toluene	ug / L	10/19/2011	<1	<1		<5
Toluene	ug / L	3/13/2012	<5	<1		<5
Toluene	ug / L	4/3/2012	<1	<1		<5
Toluene	ug / L	5/16/2012	<1	<1	<1	
Toluene	ug / L	6/15/2012	<1	<1	<1	
Toluene	ug / L	7/16/2012	<1	<1	<1	<5
Toluene	ug / L	8/9/2012	<1	<1	<1	
Toluene	ug / L	9/13/2012	<1	<1	<1	
Toluene	ug / L	10/2/2012	<1	<1	<1	105
Trans-1,2-Dichloroethylene	ug / L	3/25/2009	< 1			< 10
Trans-1,2-Dichloroethylene	ug / L	5/1/2009	< 1		< 5	
Trans-1,2-Dichloroethylene	ug / L	6/30/2009	< 1		< 5	< 10
Trans-1,2-Dichloroethylene	ug / L	7/29/2009	< 1		< 5	< 5
Trans-1,2-Dichloroethylene	ug / L	9/2/2009	< 1		< 5	
Trans-1,2-Dichloroethylene	ug / L	12/1/2009				<5
Trans-1,2-Dichloroethylene	ug / L	9/14/2010	<0.5	<0.5	<2.5	
Trans-1,2-Dichloroethylene	ug / L	9/2/2010	<0.5	<0.5	<2.5	
Trans-1,2-Dichloroethylene	ug / L	10/15/2010	<0.5	<0.5	<2.5	<2.5
Trans-1,2-Dichloroethylene	ug / L	4/26/2010	<0.5	<0.5	<2.5	
Trans-1,2-Dichloroethylene	ug / L	5/17/2010	<0.5	<0.5	<2.5	
Trans-1,2-Dichloroethylene	ug / L	3/18/2010	<0.5	<0.5		<5
Trans-1,2-Dichloroethylene	ug / L	6/29/2010	<0.5	<0.5	<2.5	<2.5
Trans-1,2-Dichloroethylene	ug / L	7/27/2010	<0.5	<0.5	<2.5	<2.5
Trans-1,2-Dichloroethylene	ug / L	5/11/2011	<0.5	<0.5		<2.5
Trans-1,2-Dichloroethylene	ug / L	6/30/2011	<0.5	<0.5		<2.5
Trans-1,2-Dichloroethylene	ug / L	7/28/2011	<0.5	<0.5		<2.5
Trans-1,2-Dichloroethylene	ug / L	9/1/2011	<0.5	<0.5		<2.5
Trans-1,2-Dichloroethylene	ug / L	10/19/2011	<0.5	<0.5		<2.5
Trans-1,2-Dichloroethene	ug / L	3/13/2012	<5	<1		<5
Trans-1,2-Dichloroethene	ug / L	4/3/2012	<1	<1		<5
Trans-1,2-Dichloroethene	ug / L	5/16/2012	<1	<1	<1	
Trans-1,2-Dichloroethene	ug / L	6/15/2012	<1	<1	<1	
Trans-1,2-Dichloroethene	ug / L	7/16/2012	<1	<1	<1	<5
Trans-1,2-Dichloroethene	ug / L	8/9/2012	<1	<1	<1	
Trans-1,2-Dichloroethene	ug / L	9/13/2012	<1	<1	<1	
Trans-1,2-Dichloroethene	ug / L	10/2/2012	<1	<1	<1	<5
Trans-1,3-Dichloropropene	ug / L	3/25/2009	< 1			< 10
Trans-1,3-Dichloropropene	ug / L	5/1/2009	< 1		< 5	
Trans-1,3-Dichloropropene	ug / L	6/30/2009	< 1		< 5	< 10
Trans-1,3-Dichloropropene	ug / L	7/29/2009	< 1		< 5	< 5
Trans-1,3-Dichloropropene	ug / L	9/2/2009	< 1		< 5	
Trans-1,3-Dichloropropene	ug / L	12/1/2009				<5
Trans-1,3-Dichloropropene	ug / L	9/14/2010	<0.5	<0.5	<2.5	
Trans-1,3-Dichloropropene	ug / L	9/2/2010	<0.5	<0.5	<2.5	
Trans-1,3-Dichloropropene	ug / L	10/15/2010	<0.5	<0.5	<2.5	<2.5
Trans-1,3-Dichloropropene	ug / L	4/26/2010	<0.5	<0.5	<2.5	
Trans-1,3-Dichloropropene	ug / L	5/17/2010	<0.5	<0.5	<2.5	
Trans-1,3-Dichloropropene	ug / L	3/18/2010	<0.5	<0.5		<5
Trans-1,3-Dichloropropene	ug / L	6/29/2010	<0.5	<0.5	<2.5	<2.5
Trans-1,3-Dichloropropene	ug / L	7/27/2010	<0.5	<0.5	<2.5	<2.5

Parameter	Units	Date	Leachate Field Blank	Leachate Trip Blank	Treated Leachate	Untreated Leachate
Trans-1,3-Dichloropropene	ug / L	5/11/2011	<0.5	<0.5		<2.5
Trans-1,3-Dichloropropene	ug / L	6/30/2011	<0.5	<0.5		<2.5
Trans-1,3-Dichloropropene	ug / L	7/28/2011	<0.5	<0.5		<2.5
Trans-1,3-Dichloropropene	ug / L	9/1/2011	<0.5	<0.5		<2.5
Trans-1,3-Dichloropropene	ug / L	10/19/2011	<0.5	<0.5		<2.5
Trans-1,3-Dichloropropene	ug / L	3/13/2012	<20	<4		<20
Trans-1,3-Dichloropropene	ug / L	4/3/2012	<4	<4		<20
Trans-1,3-Dichloropropene	ug / L	5/16/2012	<4	<4	<4	
Trans-1,3-Dichloropropene	ug / L	6/15/2012	<4	<4	<4	
Trans-1,3-Dichloropropene	ug / L	7/16/2012	<4	<4	<4	<20
Trans-1,3-Dichloropropene	ug / L	8/9/2012	<4	<4	<4	
Trans-1,3-Dichloropropene	ug / L	9/13/2012	<4	<4	<4	
Trans-1,3-Dichloropropene	ug / L	10/2/2012	<4	<4	<4	<20
Trichloroethylene	ug / L	3/25/2009	< 1			< 10
Trichloroethylene	ug / L	5/1/2009	< 1		< 5	
Trichloroethylene	ug / L	6/30/2009	< 1		< 5	< 10
Trichloroethylene	ug / L	7/29/2009	< 1		< 5	< 5
Trichloroethylene	ug / L	9/2/2009	< 1		< 5	
Trichloroethylene	ug / L	12/1/2009				<5
Trichloroethylene	ug / L	9/14/2010	<1	<1	<5	
Trichloroethylene	ug / L	9/2/2010	<1	<1	<5	
Trichloroethylene	ug / L	10/15/2010	<1	<1	<5	<5
Trichloroethylene	ug / L	4/26/2010	<1	<1	<5	
Trichloroethylene	ug / L	5/17/2010	<1	<1	<5	
Trichloroethylene	ug / L	3/18/2010	<1	<1		<5
Trichloroethylene	ug / L	6/29/2010	<1	<1	<5	<5
Trichloroethylene	ug / L	7/27/2010	<1	<1	<5	<5
Trichloroethylene	ug / L	5/11/2011	<1	<1		<5
Trichloroethylene	ug / L	6/30/2011	<1	<1		<5
Trichloroethylene	ug / L	7/28/2011	<1	<1		<5
Trichloroethylene	ug / L	9/1/2011	<1	<1		<5
Trichloroethylene	ug / L	10/19/2011	<1	<1		<5
Trichloroethene	ug / L	3/13/2012	<5	<1		<5
Trichloroethene	ug / L	4/3/2012	<1	<1		<5
Trichloroethene	ug / L	5/16/2012	<1	<1	<1	
Trichloroethene	ug / L	6/15/2012	<1	<1	<1	
Trichloroethene	ug / L	7/16/2012	<1	<1	<1	<5
Trichloroethene	ug / L	8/9/2012	<1	<1	<1	
Trichloroethene	ug / L	9/13/2012	<1	<1	<1	
Trichloroethene	ug / L	10/2/2012	<1	<1	<1	<5
Trichlorofluoromethane	ug / L	3/25/2009	< 2			< 20
Trichlorofluoromethane	ug / L	5/1/2009	< 2		< 10	
Trichlorofluoromethane	ug / L	6/30/2009	< 2		< 10	< 20
Trichlorofluoromethane	ug / L	7/29/2009	< 2		< 10	< 10
Trichlorofluoromethane	ug / L	9/2/2009	< 2		< 10	
Trichlorofluoromethane	ug / L	12/1/2009				<10
Trichlorofluoromethane	ug / L	9/14/2010	<1	<1	<5	
Trichlorofluoromethane	ug / L	9/2/2010	<1	<1	<5	
Trichlorofluoromethane	ug / L	10/15/2010	<1	<1	<5	<5
Trichlorofluoromethane	ug / L	4/26/2010	<1	<1	<5	
Trichlorofluoromethane	ug / L	5/17/2010	<1	<1	<5	
Trichlorofluoromethane	ug / L	3/18/2010	<1	<1		<10
Trichlorofluoromethane	ug / L	6/29/2010	<1	<1	<5	<5
Trichlorofluoromethane	ug / L	7/27/2010	<1	<1	<5	<5
Trichlorofluoromethane	ug / L	5/11/2011	<1	<1		<5
Trichlorofluoromethane	ug / L	6/30/2011	<1	<1		<5
Trichlorofluoromethane	ug / L	7/28/2011	<1	<1		<5
Trichlorofluoromethane	ug / L	9/1/2011	<1	<1		<5
Trichlorofluoromethane	ug / L	10/19/2011	<1	<1		<5
Trichlorofluoromethane	ug / L	3/13/2012	<5	<1		<5
Trichlorofluoromethane	ug / L	4/3/2012	<1	<1		<5
Trichlorofluoromethane	ug / L	5/16/2012	<1	<1	<1	
Trichlorofluoromethane	ug / L	6/15/2012	<1	<1	<1	
Trichlorofluoromethane	ug / L	7/16/2012	<1	<1	<1	<5
Trichlorofluoromethane	ug / L	8/9/2012	<1	<1	<1	
Trichlorofluoromethane	ug / L	9/13/2012	<1	<1	<1	
Trichlorofluoromethane	ug / L	10/2/2012	<1	<1	<1	<5

Parameter	Units	Date	Leachate Field Blank	Leachate Trip Blank	Treated Leachate	Untreated Leachate
Vinyl Chloride	ug / L	3/25/2009	< 1			< 10
Vinyl Chloride	ug / L	5/1/2009	< 1		< 5	
Vinyl Chloride	ug / L	6/30/2009	< 1		< 5	< 10
Vinyl Chloride	ug / L	7/29/2009	< 1		< 5	< 5
Vinyl Chloride	ug / L	9/2/2009	< 1		< 5	
Vinyl Chloride	ug / L	12/1/2009				<5
Vinyl Chloride	ug / L	9/14/2010	<0.5	<0.5	<2.5	
Vinyl Chloride	ug / L	9/2/2010	<0.5	<0.5	<2.5	
Vinyl Chloride	ug / L	10/15/2010	<0.5	<0.5	<2.5	<2.5
Vinyl Chloride	ug / L	4/26/2010	<0.5	<0.5	<2.5	
Vinyl Chloride	ug / L	5/17/2010	<0.5	<0.5	<2.5	
Vinyl Chloride	ug / L	3/18/2010	<0.5	<0.5		16
Vinyl Chloride	ug / L	6/29/2010	<0.5	<0.5	<2.5	3.3
Vinyl Chloride	ug / L	7/27/2010	<0.5	<0.5	<2.5	<2.5
Vinyl Chloride	ug / L	5/11/2011	<0.5	<0.5		<2.5
Vinyl Chloride	ug / L	6/30/2011	<0.5	<0.5		<2.5
Vinyl Chloride	ug / L	7/28/2011	<0.5	<0.5		<2.5
Vinyl Chloride	ug / L	9/1/2011	<0.5	<0.5		<2.5
Vinyl Chloride	ug / L	10/19/2011	<0.5	<0.5		<2.5
Vinyl Chloride	ug / L	3/13/2012	<2	<0.4		<2
Vinyl Chloride	ug / L	4/3/2012	<0.4	<0.4		<2
Vinyl Chloride	ug / L	5/16/2012	<0.4	<0.4	<0.4	
Vinyl Chloride	ug / L	6/15/2012	<0.4	<0.4	<0.4	
Vinyl Chloride	ug / L	7/16/2012	<0.4	<0.4	<0.4	<2
Vinyl Chloride	ug / L	8/9/2012	<0.4	<0.4	<0.4	
Vinyl Chloride	ug / L	9/13/2012	<0.4	<0.4	<0.4	
Vinyl Chloride	ug / L	10/2/2012	<0.4	<0.4	<0.4	<2
Xylene, M&P	ug / L	3/25/2009	< 2			36
Xylene, M&P	ug / L	5/1/2009	< 2		< 10	
Xylene, M&P	ug / L	6/30/2009	< 2		< 10	60
Xylene, M&P	ug / L	7/29/2009	< 2		< 10	68
Xylene, M&P	ug / L	9/2/2009	< 2		< 10	
Xylene, M&P	ug / L	12/1/2009				10
Xylene, M&P	ug / L	9/14/2010	<1	<1	<5	
Xylene, M&P	ug / L	9/2/2010	<1	<1	<5	
Xylene, M&P	ug / L	10/15/2010	<1	<1	<5	<5
Xylene, M&P	ug / L	4/26/2010	<1	<1	<5	
Xylene, M&P	ug / L	5/17/2010	<1	<1	<5	
Xylene, M&P	ug / L	3/18/2010	<1	<1		56
Xylene, M&P	ug / L	6/29/2010	<1	<1	6.1	50
Xylene, M&P	ug / L	7/27/2010	<1	<1	13	36
Xylene, M&P	ug / L	5/11/2011	<1	<1		46
Xylene, M&P	ug / L	6/30/2011	<1	<1		<5
Xylene, M&P	ug / L	7/28/2011	<1	<1		<5
Xylene, M&P	ug / L	9/1/2011	<1	<1		<5
Xylene, M&P	ug / L	10/19/2011	<1	<1		<5
Xylene, M&P	ug / L	3/13/2012	35.3	<2		33.3
Xylene, M&P	ug / L	4/3/2012	<2	<2		35.9
Xylene, M&P	ug / L	5/16/2012	<2	<2	<2	
Xylene, M&P	ug / L	6/15/2012	<2	<2	<2	
Xylene, M&P	ug / L	7/16/2012	<2	<2	<2	<10
Xylene, M&P	ug / L	8/9/2012	<2	<2	<2	
Xylene, M&P	ug / L	9/13/2012	<2	<2	<2	
Xylene, M&P	ug / L	10/2/2012	<2	<2	<2	29.7
Xylene, O	ug / L	3/25/2009	< 1			14
Xylene, O	ug / L	5/1/2009	< 1		< 5	
Xylene, O	ug / L	6/30/2009	< 1		< 5	23
Xylene, O	ug / L	7/29/2009	< 1		< 5	30
Xylene, O	ug / L	9/2/2009	< 1		< 5	
Xylene, O	ug / L	12/1/2009				5.6
Xylene, O	ug / L	9/14/2010	<1	<1	<5	
Xylene, O	ug / L	9/2/2010	<1	<1	<5	
Xylene, O	ug / L	10/15/2010	<1	<1	<5	<5
Xylene, O	ug / L	4/26/2010	<1	<1	<5	
Xylene, O	ug / L	5/17/2010	<1	<1	<5	
Xylene, O	ug / L	3/18/2010	<1	<1		19
Xylene, O	ug / L	6/29/2010	<1	<1	<5	21
Xylene, O	ug / L	7/27/2010	<1	<1	5.3	13

Parameter	Units	Date	Leachate Field Blank	Leachate Trip Blank	Treated Leachate	Untreated Leachate
Xylene, O	ug / L	5/11/2011	<1	<1		20
Xylene, O	ug / L	6/30/2011	<1	<1		<5
Xylene, O	ug / L	7/28/2011	<1	<1		<5
Xylene, O	ug / L	9/1/2011	<1	<1		<5
Xylene, O	ug / L	10/19/2011	<1	<1		<5
Xylene, O	ug / L	3/13/2012	18.5	<1		18.1
Xylene, O	ug / L	4/3/2012	<1	<1		20
Xylene, O	ug / L	5/16/2012	<1	<1	<1	
Xylene, O	ug / L	6/15/2012	<1	<1	<1	
Xylene, O	ug / L	7/16/2012	<1	<1	<1	14.1
Xylene, O	ug / L	8/9/2012	<1	<1	<1	
Xylene, O	ug / L	9/13/2012	<1	<1	<1	
Xylene, O	ug / L	10/2/2012	<1	<1	<1	14.1

* Leachate Field Blank results from 3/13/2012 are most likely a duplicate of Untreated Leachate, rather than a field blank.

Project: SLCRCT Project #: 2012

Date: _____ Page: _____ of _____

Total Nitrogen Composite

May 17 — 38.1 mg/l

June — 38.1

July 10 — 92.9 mg/l

August 15 — 140 mg/l

August 14 — 92.9 mg/l

Sept — 95 mg/l

May 0.805 MG 38.1 mg/l

38.1 × 8.34 × 0.805 = 256 #N / 22.25 = 11.5 #N/Acre

June 1.413 MG 38.1 mg/l

38.1 × 8.34 × 1.413 = 449 #N / 22.25 = 20.2 #N/Acre

July 1.28 MG 92.9 mg/l

92.9 × 8.34 × 1.28 = 992 #N / 22.25 = 44.6 #N/Acre

August 1.10 MG 92.9 mg/l

92.9 × 8.34 × 1.10 = 852 #N / 22.25 = 38.3 #N/Acre

Sept. 1.15 MG 137 mg/l

90 × 8.34 × 1.15 = 1 #N / 22.25 = 376 #N/Ac

APPENDIX E

ST. LOUIS COUNTY
REGIONAL LANDFILL
SW-405

HYDROGEOLOGIC INVESTIGATION WORK PLAN FOR LEACHATE SPRAY IRRIGATION EXPANSION

PREPARED FOR:
SAINT LOUIS COUNTY
ENVIRONMENTAL SERVICES DEPARTMENT
307 FIRST STREET SOUTH, STE. 115
VIRGINIA, MINNESOTA 55792

PREPARED BY:
NTS
526 CHESTNUT STREET
P.O. BOX 1142
VIRGINIA, MINNESOTA 55792
(218) 741-4290

NTS PROJECT 5062P

July 2013

ST. LOUIS COUNTY
REGIONAL LANDFILL
SW-405

HYDROGEOLOGIC INVESTIGATION WORK PLAN FOR LEACHATE SPRAY IRRIGATION EXPANSION

PREPARED FOR:
SAINT LOUIS COUNTY
ENVIRONMENTAL SERVICES DEPARTMENT
307 FIRST STREET SOUTH, STE. 115
VIRGINIA, MINNESOTA 55792

PREPARED BY:
NTS
526 CHESTNUT STREET
P.O. BOX 1142
VIRGINIA, MINNESOTA 55792
(218) 741-4290

NTS PROJECT 5062P

July 2013

I hereby certify that this plan, specification, or report was prepared by me or under my direct supervision and that I am a duly Licensed Professional Geologist under the Laws of the State of Minnesota.

Signature: _____

Date: 6/28/13 License # 30704

TABLE OF CONTENTS

1. INTRODUCTION 1

2. PAST LAND USE 2

3. HYDROGEOLOGIC CONCEPTUAL MODEL 3

3.1. HYDROGEOLOGIC INFORMATION FROM PREVIOUS SITE INVESTIGATIONS 3
3.2. EXTRAPOLATION OF PREVIOUS FINDINGS TO SECONDARY FIELD INVESTIGATION 4

4. HYDROGEOLOGIC INVESTIGATION 6

4.1. BORINGS 6
4.2. TEMPORARY WELLS 7
4.3. SOIL SURVEY 7

5. PROPOSED ENVIRONMENTAL MONITORING SYSTEM 8

6. SCHEDULE 9

TABLES

Table 1 Existing Monitoring Wells and Static Water Level Elevations
Table 2 Proposed Boring and Temporary Well Information
Table 3 Proposed Monitoring Well Information

FIGURES

Figure 1 Site Location Map
Figure 2 Property Ownership Map
Figure 3 Site Overview Map
Figure 4 Sprayfield Expansion Layout
Figure 5 Historical Aerial Photos
Figure 5A Historical Aerial 1941
Figure 5B Historical Aerial 1948
Figure 5C Historical Aerial 1961
Figure 5D Historical Aerial 1972
Figure 5E Historical Aerial 1981
Figure 6 Soil Boring and Cross-Section Locations from Phase II
Figure 7 A-A' Cross-Section from Phase II
Figure 8 B-B' Cross-Section from Phase II
Figure 9 Regional Groundwater Flow from Preliminary Site Investigation
Figure 10 Groundwater Contour Map October 2012
Figure 11 Proposed Boring Map
Figure 12 Proposed Monitoring System

APPENDIX A

1998 Biosolids Site Application Form

2012 Biosolids Annual Report

1. INTRODUCTION

St. Louis County Environmental Services is proposing an additional leachate spray irrigation site (the "Secondary Spray Irrigation Field") at the Regional Landfill (SW-405) as part of a re-permitting application anticipated to be submitted during June 2013. The document *Land Treatment of Landfill Leachate (MPCA, April 2011)* lists 18 informational requirements for review and approval by the MPCA. The table below designates the location of that information within the documents prepared for re-permitting.

Information required per MPCA per Land Application Guidance Page 9,10.	Location of Required Information within Re-permitting Package
1. Description of the land treatment System	Design Report
2. The total number of acres for the land treatment area and buffer areas	Design Report & Leachate Management Plan
3. Description of the local government and land owner(s)	Design Report
4. A description of the past land use of the irrigation area	Design Report & Hydrogeologic Investigation Workplan
5. A description of land use within a one mile radius	Design Report
6. Potential wind drift receptors	Design Report
7. Flood plains, wetlands and surface waters within a one mile radius	Design Report
8. USGS topographic map with the spray irrigation features and buffer zones	Design Report, Leachate Management plan & Hydrogeologic Investigation
9. Soil survey map	Hydrogeologic Investigation
10. Description of soils on the map including items a – i	Hydrogeologic Investigation
11. Slopes	Design Report
12. Land application life expectance	Leachate Management Plan
13. Description of how marginal soils will be amended	Design Report
14. A hydrogeologic investigation	Hydrogeologic Investigation
15. Formal compliance boundary	Hydrogeologic Investigation
16. The proposed monitoring network	Hydrogeologic Investigation
17. A signed industrial discharge agreement with a POTW	Leachate Management Plan
18. Methods for controlling access	Design Report

As shown in the table above, aspets of the Hydrogeologic Investigation are provided in items #4, #8, #9, #10, #14, #15, and #16. The purpose of this document is to provide:

1. Information required by items #4, #8, and #15 (as presented in Sections 2 and 3).
2. A work plan for investigation to satisfy items #9, # 10, #14, and #16 as presented in Sections 4 and 5).

Previous hydrogeologic investigation has included:

1. *Preliminary Site Evaluation for the State of the Art Regional Landfill, St. Louis County, Minnesota (RREM, NTS, Baker Engineering, 1991.)*
2. *State of the Art Regional Landfill, Phase II Detailed Site Investigation Report (RREM, NTS, Baker Engineering, 1992.)*
3. *State of the Art Regional Landfill, Phase III Environmental Monitoring System Report (RREM, NTS, Baker Engineering, 1992.)*
4. *Water Table Evaluation at the St. Louis County Regional Landfill (NTS, 2003).*

The previous investigation established a hydrogeologic model for the landfill and the existing South Spray Irrigation Field (the "Primary Field"), summarized below in Section 3. It also resulted in a groundwater monitoring system adequate for detecting impacts from the landfill cells and the Primary Field. By extrapolating the data from previous investigation, NTS was able to develop a conceptual hydrogeologic representation of the Secondary Field which provides sufficient understanding of the area hydrogeology to produce this condensed Phase II Work Plan and Phase III Work Plan to meet the requirements of #10 above and Minnesota rules 7035.2815.

2. PAST LAND USE

The proposed Secondary Field is to be located immediately north of the existing Primary Field on the 160-acre area of land currently administered for land application of waste water treatment biosolids by the Quad Cities Biosolids Disposal Site Authority. The cities of Virginia, Eveleth, Gilbert and Mountain Iron each own separate portions of the 160 acre field and maintain individual land application permits. Figure 2 presents a land ownership map and Figure 3 shows the location of each city's permitted boundaries.

Application of biosolids on the 160 acre field dates back to the 1970s, although specific application rates to each portion of the field are not available until 1998. The 1998 Biosolids Site Application Form and the 2012 Biosolids Annual Report for the Virginia Waste Water Treatment Plant (WWTP) are contained in Appendix A.

Prior to 1998, the proposed Secondary Field was an overburden and waste rock stockpile originally placed in association with the mining of the Rochleau Open Pit complex. The Secondary Field is located in the southeast quarter of Section 3 and in the extreme northeastern portion of Section 10. As discussed in; *State of the Art Regional Landfill, Phase II Detailed Site Investigation Report (RREM, NTS, Baker Engineering, 1992)*, the material placed in Sections 3 and 10 was primarily overburden which consisted of mostly glacial sediments but also included some Upper Cretaceous siltstones that were dumped from open rail cars. As shown in Figure 5A, Historical Aerial 1941, dumped materials were visible in the area of the Secondary Field. The materials were placed in rows running southwest to northeast through the southeast quarter of Section 3. Historical aerial photographs from 1948, 1961, 1972, and 1981 (Figures 5B through 5E) show an expanded mine dump area in the vicinity of the Secondary Field that covers almost all of the southeast quarter of Section 3 as well as the northeastern portion of Section 10.

Each city council has approved a motion to proceed with the formulation of a land purchase agreement for part, or all, of the 160 acres. Since Virginia currently produces dewatered class B biosolids that can be applied to agricultural fields as a beneficial use, Virginia requires less acreage at the Biosolids Authority property than is currently available. As a result, the proposed Secondary Field is located on Virginia's portion of the biosolids lands. The Virginia land application site is divided into Field 1 through Field 6, which are identified on Figure 4. The proposed Secondary Field, to be composed of biosolids Field 1 through Field 3, is also shown on Figure 4. After accounting for 100 foot buffer strips along the west and north, the proposed size of the Secondary Field is 38.31 acres.

3. HYDROGEOLOGIC CONCEPTUAL MODEL

3.1. Hydrogeologic Information from Previous Site Investigations

Figures 6, 7 and 8 are excerpted from the Phase II Investigation (RREM, NTS, Baker Engineering, 1991) and present boring locations and cross sections from the hydrogeologic investigation of the landfill.

The conceptual model of the regional landfill and leachate disposal area, as outlined in the Phase II report, includes the following information:

1. The uppermost materials are made up of mine overburden stockpile that range in thickness from 20 to 80 feet. These materials consist of clay, silt and sand with cobbles and boulders throughout.
2. Native unconsolidated glacial drift underlies the mine dump materials with thicknesses ranging from 2 to 36 feet. The glacial sediments consist of fine to medium grained sand with varying amounts of silt and clay.
3. Archean, mafic meta-volcanic bedrock underlies the glacial drift.
4. An unconfined aquifer exists beneath the area. There are approximately 25 to 50 feet of unsaturated soils between the top of the mine dump and the saturated zone. The water table is within the mine dump material, and the bedrock forms the lower confining unit, leading to a saturated thickness of approximately 18 to 47 feet.
5. Horizontal and vertical hydraulic conductivity were estimated as part of the Phase II. Horizontal hydraulic conductivity estimates are as follows:
   - Native glacial drift 9.6×10^{-5} cm/sec
   - Mine dump material 1.2×10^{-4} cm/sec below the landfill to
     4.4×10^{-5} cm/sec below the leachate treatment area

   Vertical hydraulic conductivity estimates were as follows:
   - Native glacial drift 1.0×10^{-6} cm/sec
   - Mine dump material 1.0×10^{-5} cm/sec below the landfill to
     3.4×10^{-7} cm/sec below the leachate treatment area
6. The groundwater flow direction is southeast. Figure 10 presents the locations of existing monitoring wells and water table contours generated from October 2012 static water level data.

3.2. Extrapolation of Previous Findings to Secondary Field Investigation

The mine stockpile materials below the Secondary Field are expected to be similar to those below the existing landfill. The historical air photos in Figures 5A though 5E show that the placement of the stockpile materials occurred about the same time, and the source of the materials are the overburden and waste rock from the same mine

The native soils are expected to be the same below the Secondary Field. References to both the *Geologic Map of Minnesota – Quaternary Geology, Minnesota Geological Survey, State Map*

Series S-1 (Hobbs and Goebel, 1982) and the *Bedrock Topographic Map of the Mesabi Range, Hibbing to Virginia, Minnesota, University of Minnesota, Minnesota Geological Survey (Bloomgren, 1988)* were included in the *Preliminary Site Evaluation Report for the State of the Art Regional Landfill (RREM, NTS, Baker Engineering, 1991.* These sources indicate that the meta-volcanic bedrock and glacial drift present in the landfill area and Primary Field likely extend into the area of the proposed Secondary Field.

Static water levels have generally been measured in monitoring wells at the Site during the spring and fall of each year since 1992. Water table contour maps generated from each data set are very similar and indicate that the flow direction of groundwater varies only slightly over time although static water levels may vary event to event by over 5.5 feet in several wells. The *Preliminary Site Evaluation Report for the State of the Art Regional Landfill (RREM, NTS, Baker Engineering, 1991)* discussed the influence of the Laurentian Divide and a northeast plunging bedrock valley on the regional groundwater flow. Figure 9, excerpted from that document, shows regional groundwater contours in the vicinity of the existing landfill and in the area of the proposed Secondary Field. The groundwater contours indicate that the direction of groundwater flow is southeast. Figure 9 also shows a groundwater flow divide that bisects the biosolids site immediately northwest of the proposed Secondary Field. It is not known if the data used to generate the figure considered the influence of the mine stockpiles on the local groundwater table.

Specific objectives of the hydrogeologic investigation of the Secondary Field will be;

- determine the thickness, soil classification, grain size and permeability of the mine stockpile,
- determine the thickness, soil classification, grain size and permeability of the native soils below the stockpile,
- refine the hydraulic conductivity estimates of the aquifer,
- verify the extrapolated groundwater flow direction, and
- Estimate the vertical component of groundwater flow.

4. HYDROGEOLOGIC INVESTIGATION

4.1. Borings

The proposed Secondary Field spray irrigation expansion Site consists of 38.31 acres. Consistent with Minnesota Rules 7035.2815, Subpart 3, a total of 34 borings would be required to define the hydrogeologic conditions within the area. However, since Subpart 3 also states that previous data and boring information may be used as part of the hydrogeologic evaluation, 11 boring locations are proposed to be completed with a shallow and deep borings at three of the locations. Data collected from these 11 borings will be analyzed in conjunction with data already collected from the landfill area and the Primary Field. The locations chosen are intended to give a good spatial representation of the soil characteristics across the Secondary Field. An NTS environmental geologist will be on-site during the drilling to determine sample locations, collect soil samples, complete field notes, and to visually classify the soils according to American Society for Testing and Materials (ASTM) Standard D2488.

Figure 11 identifies the locations of the proposed borings. Table 2 summarizes the estimated elevation of the ground surface, estimated elevation of the water table, estimated boring depth, estimated depth to native soil, and estimated depth to bedrock for each boring. One sample will be collected from each boring for determination of grain size distribution per ASTM D422 and permeability per ASTM D2434 for sandy soils and ASTM D5084 for clayey soils.

Each of the proposed borings will be advanced in accordance with ASTM D1586 to depths ranging from 41 to 63 feet below ground surface. Split spoon samples will be collected from each five foot increment and at changes in the soil type within the boring. Three of the borings will be continuously sampled throughout the entire boring. Soil samples will be stored in sealed containers for future grain size or permeability analysis. The samples will be preserved and transported according to ASTM D4220.

One grain size analysis and one permeability analysis will be conducted on soil from each boring. Sample locations will be selected such that each soil unit at the Site is sampled at various locations and elevations.

4.2. Temporary Wells

Each of the 14 borings is anticipated to reach the water table. All of the borings will be completed as temporary wells to allow accurate measurement of water table elevations. Three of the 11 boring locations will have nested wells, in order to determine the vertical hydraulic gradient in the Secondary Field. The proposed temporary well locations are shown on Figure 11. The actual location of each temporary well will be collected using Global Positioning System (GPS) coordinates to sub-meter accuracy recorded in Universal Transverse Mercator (UTM) Zone 15, North American Datum 1983 (NAD 83).

Each temporary well will be constructed with a poly-vinyl chloride (PVC) riser, a 10-foot long PVC screen, sand pack, and grout to the surface. The screened interval will intersect the water table. Top of riser elevations will be surveyed to the nearest 0.01 foot.

4.3. Soil Survey

The soils zone is expected to be similar to that of the Primary Field, being developed by soil forming processes since the construction of the mine stockpile and influenced by application of biosolids. However,the history of biosolids application to the Primary Field has not been as extensive as that which occurred on the proposed Secondary Field. The 1998 biosolids Site Application Form for Virginia's portion of the biosolids lands is contained in Appendix A and contains soils information from two samples. The samples are described as medium sandy loam and medium sandy clay loam with organic matter of 2.9%, extractable phosphorous ranging from 92 to 117 ppm, exchangeable potassium ranging from 100 to 130 ppm, pH from 7.2 to 7.5 and soluble salts ranging from 0.3 to 0.4 mmohs.

The soil survey will be updated by a qualified geologist or soil scientist with education and experience in soil classification. Up to five transects across the Secondary Field will be performed with soil probes and visual classifications on approximately 200 foot intervals. Soil samples from the six inch to 12 inch depth interval will be selected for analysis of % organic matter, available water holding capacity, extractable phosphorous, exchangeable potassium, pH, cation exchange capacity, and soluble salts at the University of Minnesota Soil Testing Laboratory. The quantity of samples will be determined based on uniformity of the soil descriptions in the field.

5. PROPOSED ENVIRONMENTAL MONITORING SYSTEM

Four monitoring wells are proposed to ensure compliance with groundwater quality standards, Per Minnesota Rules 7035.2815, Subpart 4. The monitoring wells will be no more than 200 feet from the edge of the proposed Secondary Field perimeter, and will encompass the Secondary Field. The monitoring system will consist of one monitoring well near the center of the spray field, two down-gradient monitoring wells, and one up-gradient monitoring well. Prior to installation of the wells the preliminary data from the soil borings and monitoring wells will be provided to the MPCA and discussed to allow any necessary adjustments to the locations of the wells.

Each monitoring well will be constructed with a two-inch diameter black iron riser, 10-foot long stainless steel, 10 slot screen, sand pack, and grout to the surface. The screened interval will intersect the water table.

Following well installation, a survey will define the X and Y coordinates of each well to the nearest foot and the ground surface and top of riser elevations to the nearest 0.01 foot. Each well will be developed with a surge block and stainless steel bailer, and after most of the fines are removed, with a 1.8 inch diameter submersible pump. After development, each well will be pumped with the submersible pump while monitoring drawdown to determine if the well is a stabilization well or a recovery well. If the well is a stabilization well, the temperature, pH and specific conductance will be measured over consecutive well volumes to determine the stabilization characteristics and approximate low flow sampling rate that would apply to the well.

A single well aquifer test will be completed for each monitoring well. A solid slug will be used to produce an instantaneous displacement of the water column and time recovery data for both slug in and slug out phases will be recorded in 2 second intervals with a Telog data logger with a Druck transducer. The time drawdown data will be used to calculate the hydraulic conductivity using the Bouwer-Rice method for unconfined aquifers.

6. SCHEDULE

Soil borings, temporary wells and soil survey:	July 29 through August 5
Discuss preliminary data with MPCA	August 6 through August 12
Installation of monitoring wells	August 12 through August 16
Submittal of Phase II/Phase III report and Phase IV Workplan	September 9

TABLES

Table 1: Exisiting Monitoring Wells and Static Water Elevations

Monitoring Well	MW91-1	MW91-2A	MW91-2B	MW91-3	MW91-4A	MW91-4B	MW91-5A	MW91-5B	MW91-6	MW91-7	MW91-8	MW91-9	MW91-10	MW92-1A	MW94-2B	MW03-01	MW03-02	MW03-05
MDH Unique Well #	497651.00	497652.00	497653	497654	497655	497656	497657	497658	497659	497660	498076	498077	498078	519685	540223	680861	680860	680859
Northing	74268.03	74272.81	74279.67	74698.04	74700.56	74683.93	75263.40	75251.54	75678.18	75893.34	76475.16	76166.18	75769.11	74273.99	74279.20	75705.35	75743.74	75244.13
Easting	52198.36	52868.14	52909.49	51563.44	52984.61	52982.72	52986.83	52989.75	51711.37	51974.62	52587.91	53323.59	53102.37	52254.11	52876.46	52191.00	51822.23	51642.21
Date Installed	01/08/92	12/27/91	12/23/91	11/19/91	12/28/91	12/02/91	12/31/91	12/04/91	11/21/91	12/07/91	01/04/92	01/10/92	01/08/92	12/16/92	07/01/94	07/22/03	07/23/03	07/24/03
Ground Elev. (ft)	1713.71	1707.22	1707.38	1728.87	1726.60	1727.06	1728.52	1728.39	1724.22	1717.62	1718.17	1720.78	1721.12	1708.08	1708.00	1722.84	1719.97	1730.76
Top of Riser Elev.	1715.59	1708.55	1709.47	1730.52	1728.28	1728.76	1730.45	1730.50	1725.98	1719.28	1720.12	1722.44	1722.99	1709.95	1710.25	1724.75	1722.44	1732.63
Total Depth (ft)	64.38	60.25	81.49	49.65	76.68	91.20	68.93	82.61	39.76	33.16	44.75	63.66	56.87	62.64	77.00	45	39	45
Screen Length (ft)	10	10	5	10	10	5	10	5	10	10	10	10	10	10	5	10	10	10
Date of Measurement	Static Water Elevations																	
05/06/92	1660.08	1655.44	1653.93	1686.35	1660.88	1660.58	1671.27	1669.37	1696.81	1695.70	1684.94	1672.13	1671.37					
06/19/92	1660.27	1656.80	1654.37	1687.56	1660.88	1661.01	1672.70	1670.28	1696.85	1696.15	1685.87	1673.97	1670.29					
07/14/92	1660.27	1656.79	1654.43	1687.54	1661.25	1661.52	1672.72	1670.38	1696.89	1696.05	1685.64	1674.29	1673.73					
08/26/92	1660.07	1656.08	1654.18	1685.35	1660.76	1661.04	1672.08	1669.81	1696.07	1696.05	1684.68	1674.39	1669.87					
09/17/92	1660.07	1657.48	1653.93	1684.46	1662.34	1661.02	1671.50	1669.55	1695.82	1696.53	1684.34	1674.05	1673.15					
12/11/92	1659.48	1653.80	1653.12	1682.39	1659.53	1659.56	1669.98	1668.23	1694.21	1693.81	1682.64	1671.42	1669.33					
01/14/93	1659.41	1653.40	1653.07	1681.51	1659.24	1659.52	1669.44	1667.52	1693.40	1693.16	1682.08	1670.99	1669.05	1657.72				
02/09/93	1659.36	1653.11	1652.89	1680.86	1658.71	1659.10	1668.98	1667.26	1692.83	1693.24	1681.83	1670.59	1668.68	1657.30				
03/18/93	1659.07	1652.76	1652.86	1680.92	1658.43	1658.72	1668.33	1666.86	1691.82	1691.93	1681.14	1669.54	1667.96	1656.99				
04/20/93	1658.97	1652.67	1652.80	1680.55	1658.41	1658.62	1667.99	1666.57	1692.37	1692.44	1681.21	1669.08	1667.94	1657.03				
05/13/93	1659.30	1653.28	1653.13		1658.70	1658.97	1668.34	1666.66	1692.12	1693.01	1681.86	1669.06	1668.22	1653.71				
07/08/93	1662.33	1660.17	1657.33	1687.98	1661.58	1661.73	1670.31	1669.11	1695.08	1694.28	1686.08	1670.09	1670.54	1660.84				
09/15/93	1660.56	1658.49	1655.74	1688.35	1661.52	1662.22	1673.72	1671.24	1696.83	1695.92	1686.98	1671.60	1669.99	1659.73				
04/13/94	1659.65	1657.07	1654.65	1683.71	1659.94	1660.42	1670.81	1668.78	1694.38	1692.82	1684.54	1672.19	1668.92	1657.59				
06/27/94	1661.16	1661.19	1656.35	1692.14	1661.22	1661.66	1674.15	1671.85	1698.85	1697.30	1691.61	1672.16	1670.75	1660.64				
07/11/94															1653.39			
08/10/94															1652.47			
09/22/94	1660.09	1658.73		1685.46	1660.36	1660.87	1671.96	1669.80	1699.69	1695.49	1687.74	1672.02	1669.16	1658.73	1652.38			
03/31/95	1659.89	1656.40	1654.07	1682.56	1659.71	1659.08	1670.38	1668.55	1695.15	1694.44	1686.67	1669.94	1667.98	1658.30	1654.85			
06/21/95	1659.14	1652.58	1653.04	1683.10	1659.12	1659.33	1669.21	1667.37	1695.69	1695.09	1686.50	1669.79	1669.19	1657.21	1651.70			
09/20/95	1659.22	1653.33	1653.12	1683.83	1659.27	1659.60	1670.51	1668.50	1695.76	1694.44	1685.18	1669.12	1670.53	1657.36	1651.75			
04/10/96	1660.58	1657.98	1654.24	1688.11	1659.29	1659.29	1669.25	1667.45	1694.23	1694.02	1683.90	1669.94	1669.57	1659.53	1652.57			
06/21/96	1659.79	1654.45		1683.70	1660.36	1660.62	1672.41	1670.04	1697.41	1696.75	1688.80	1672.33	1670.80	1658.60	1652.58			
09/27/96	1659.25	1652.15	1652.92	1682.27	1659.44	1660.62		1668.01	1695.49	1694.73	1687.36	1671.45	1670.07	1657.07	1651.58			
04/08/97	1661.10	1660.42	1655.38	1688.23	1659.12	1660.46	1671.55	1670.38	1696.10	1695.60	1688.94	1668.57	1672.24	1660.28	1653.85			
06/26/97	1659.67	1653.88	1653.79	1683.53	1660.23	1660.32	1671.87	1669.59	1696.60	1696.09	1687.57	1672.54	1676.43	1657.95	1652.15			
09/24/97	1659.29	1652.13	1653.07	1682.21	1659.89	1659.63	1670.42	1668.40	1695.60	1694.67	1688.42	1671.85	1670.66	1657.04	1651.53			
04/01/98	1659.01	1651.42			1658.68	1657.20	1668.14	1666.99	1693.90	1692.97	1684.54	1669.22	1669.67	1656.82	1651.05			
06/24/98	1657.99	1651.22	1659.58		1658.83	1658.67	1668.65	1665.85	1695.81	1693.34	1684.98	1671.29	1669.44	1657.21	1650.93			
11/16/98	1658.68	1650.69	1651.61		1658.43	1658.37	1669.47	1665.85	1696.11	1692.39	1684.69	1670.64		1656.40	1650.59			
04/08/99	1659.50	1655.40		1683.00	1658.81	1658.81	1670.48	1668.40	1695.81	1692.89	1685.22	1670.94	1670.15	1657.69	1651.14			
09/28/99	1660.16	1650.27		1690.51	1661.44	1661.87	1673.81	1671.59	1697.82	1697.07	1692.40	1673.70	1669.63		1651.97			
04/05/00	1659.38	1653.35		1681.08	1659.65	1659.65	1669.03	1667.05	1694.12	1694.19	1686.28	1671.78	1667.52	1657.39	1649.69			
09/28/00	1659.25	1650.69		1681.60	1659.80	1660.28	1668.45	1666.92	1694.02	1693.52	1689.51	1670.00	1667.90	1656.87	1650.73			
04/05/01	1662.44	1655.28		1687.72	1659.16	1659.04	1668.19	1668.51	1691.64	1692.58	1684.32	1668.59	1666.87	1658.10	1651.42			
10/24/01	1657.57	1650.50		1681.67	1657.86	1657.89	1667.69	1665.70	1693.80	1692.66	1687.73	1671.52	1667.29	1655.09	1649.15			
04/02/02	1658.81	1656.48		1680.62	1658.68	1658.71	1667.64	1665.93	1695.49	1694.64	1685.37	1670.10	1668.47	1657.16	1651.43			
07/18/02	1655.60	1651.45			1658.25		1667.88		1694.00	1693.79	1686.10	1671.44	1668.30					
10/31/02	1659.06	1655.27		1682.77	1658.75	1658.56	1668.25	1666.45	1694.63	1693.63	1686.78	1671.49	1667.79	1656.70	1650.49			
04/01/03	1658.5	1652.6			1657.96	1657.91	1666.56	1664.95	1692.95	1692.89	1685.00	1669.62	1666.80	1656.55	1651.09			
10/06/03	1659.86	1652.65		1690.24	1658.34	1658.29	1667.33	1665.89	1694.64	1693.63	1687.76	1668.93	1667.60	1656.81	1650.64			
04/05/04	1661.30	1657.11		1691.58	1659.01	1658.95	1667.69	1666.22	1694.03	1693.82	1689.80	1670.05	1668.82	1659.04	1651.70	1686.35	1693.10	1692.33
10/18/04	1659.37	1652.37		1685.59	1659.40	1667.35	1668.55	1667.12	1695.17	1693.88	1687.99	1672.62	1668.81	1656.80	1650.60	1724.75	1722.44	1732.63
04/05/05	1660.92	1657.26		1691.92	1659.63	1659.26	1668.53	1667.03	1694.95	1695.13	1691.22	1670.61	1671.39	1659.25	1651.30	1688.36	1695.45	1695.04
10/07/05	1659.24	1652.30			1659.30	1661.39	1667.71	1665.85	1694.94	1694.04	1689.06	1672.67	1665.41	1657.03	1650.64			
12/30/05																1686.27	1693.54	1694.38
04/06/06	1661.31	1652.57		1692.46	1659.34	1659.21	1667.60	1666.00	1694.66	1694.08	1688.47	1670.23	1666.73	1658.14	1650.88	1686.94	1694.31	1694.25
10/05/06	1659.21	1655.99			1658.24	1658.11	1666.78	1664.90	1693.30	1692.88	1686.47	1672.04	1663.89	1657.04	1649.78			
04/02/07	1658.15	1657.23		1680.63	1657.92	1657.91	1665.88	1664.10	1693.80	1693.45	1685.33	1669.02	1666.12	1656.68	1651.55	1683.67	1693.64	1689.46
10/11/07	1659.39	1650.52		1691.31	1657.25	1657.34	1665.70	1664.22	1694.41	1692.20	1684.51	1667.37	1662.05	1656.10	1650.13	1684.23	1693.10	1694.36
04/20/08	1657.49	1651.22		1689.15	1655.98	1655.82	1663.89	1661.76	1690.12	1690.40	1682.59	1668.53	1660.62	1655.23	1648.55			
10/03/08	1659.80	1652.76		1683.93	1658.07	1657.91		1664.28	1695.94	1694.63	1689.13	1673.61	1664.02	1657.54	1651.16	1687.97	1695.18	
4/9/2009	1661.14	1661.31		1691.05	1660.54	1660.15	1669.27	1666.98	1696.99	1695.83	1691.28	1673.05	1665.97	1660.40	1652.70	1689.01	1696.24	
10/1/2009	1659.20	1652.64		1681.35	1659.22	1658.99	1667.70	1665.94	1695.59	1695.07	1689.55	1673.93	1664.57	1656.94	1651.28	1688.21	1695.42	
4/21/2010	1658.69	1655.09			1659.13	1658.31		1664.51	1693.17	1693.49	1685.32	1672.62	1663.41	1656.49	1651.36			
10/12/2010	1658.16	1650.05			1658.05	1657.91		1664.62	1693.60	1693.48	1687.27	1671.03		1656.02	1650.24			1696.72
4/7/2011	1661.70	1652.95		1691.32	1659.15	1658.14	1666.75	1664.46	1694.37	1693.42	1684.52	1670.37		1657.54	1651.01	1685.01	1692.26	1698.57
7/21/2011	1660.09	1655.51		1690.12	1659.57	1660.15	1672.14	1666.40	1696.46	1696.46	1688.51	1675.18	1662.19	1657.91	1651.67	1685.71	1692.83	1699.16
10/21/2011	1660.01	1654.92		1681.22	1660.57	1657.93	1670.14	1665.06	1694.30	1693.98	1686.84	1673.99	1663.21	1656.71	1650.42	1685.67	1693.44	1698.42
5/7/2012	1658.38		1651.69	1690.52				1663.54	1691.66	1692.74	1683.59	1669.97		1656.09				
10/3/2012	1659.32	1652.86			1659.62	1659.55		1666.72	1695.57	1694.90	1689.99	1674.66		1657.63	1650.72			

Table 2. Proposed Boring and Temporary Well Information

Boring	Ground Surface Elevation (ft above MSL)	Estimated Water Table Elevation (ft above MSL)	Estimated Depth to Native Soils (ft bgs)	Estimated Depth to Bedrock (ft bgs)	Estimated depth of boring (ft bgs)	Estimated Bottom of Screen Depth (ft bgs)	Grain size samples	Permeability samples
SB 13-01S	1726	1694	40	50	50	42	1	1
SB-13-01D	1726	1694	40	50	50	57	1	1
SB 13-02	1724	1693	34	43	43	41	1	1
SB 13-03	1730	1692	52	62	62	48	1	1
SB 13-04	1726	1688	48	58	58	48	1	1
SB 13-05	1722	1684	42	52	52	48	1	1
SB 13-06S	1740	1687	70	81	81	63	1	1
SB 13-06D	1740	1687	70	81	81	63	1	1
SB 13-07	1724	1684	56	66	66	50	1	1
SB 13-08	1726	1682	60	70	70	54	1	1
SB 13-09	1726	1685	63	73	73	51	1	1
SB 13-10	1728	1681	68	79	79	57	1	1
SB 13-11S	1726	1677	75	85	85	59	1	1
SB 13-11D	1726	1677	71	85	85	59	1	1
					Total anticipated well casing:	600		
					Total anticipated well screen:	140		
					Total anticipated samples:		14	14

Notes: MSL = Mean Sea Level
bgs = below ground surface

Table 3. Proposed Monitoring Well Information

Monitoring Well	Ground Surface Elevation (ft above MSL)	Estimated Water Table Elevation (ft above MSL)	Estimated Screen Interval (ft bgs)
MW13-01	1731	1683	46-56
MW13-02	1728	1699	27-37
MW13-03	1734	1668	64-74
MW13-04	1718	1660	56-66

Total anticipated well casing: 193 feet

Total anticipated well screen: 40 feet

Notes: MSL = Mean Sea Level

bgs = below ground surface

FIGURES

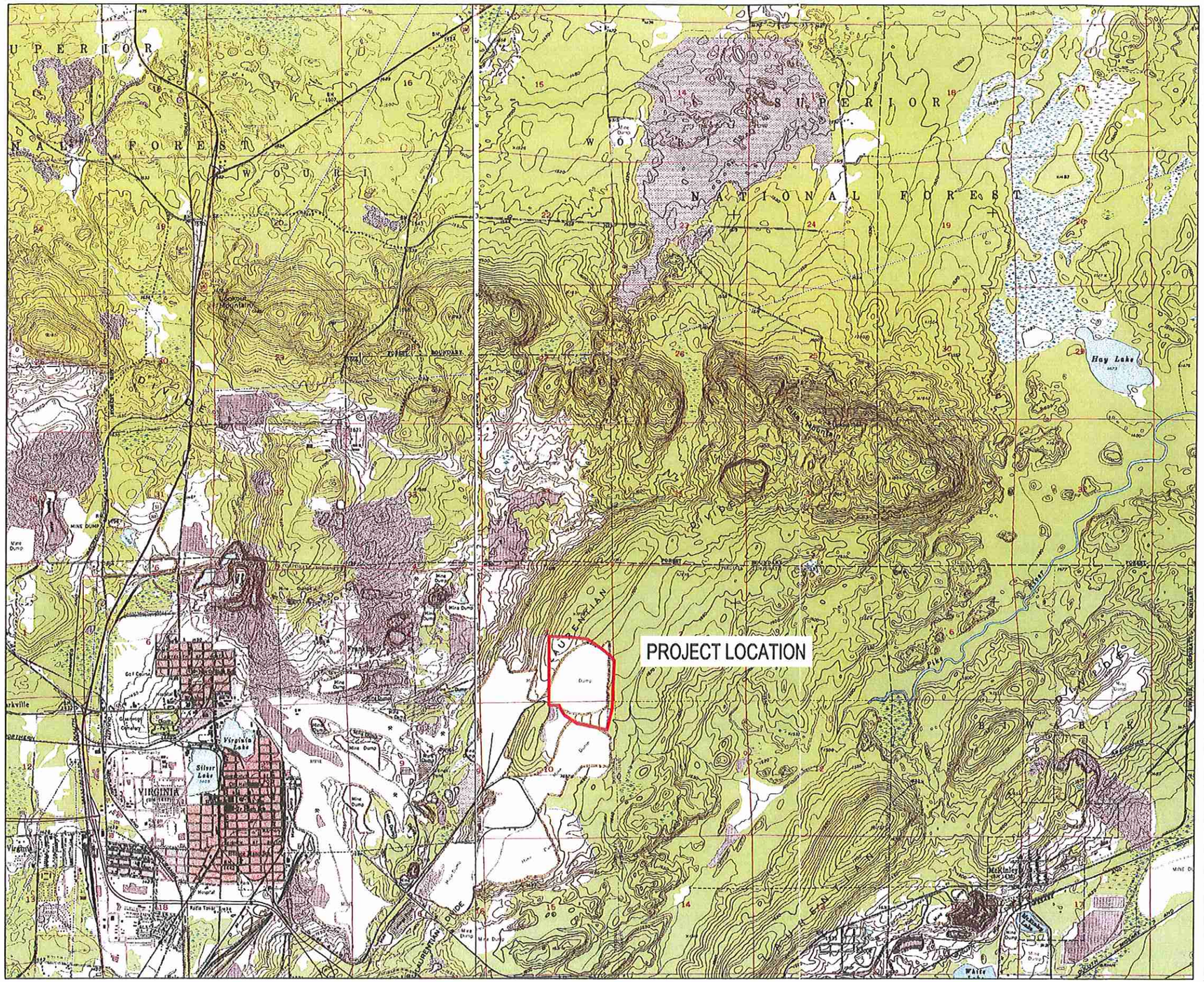

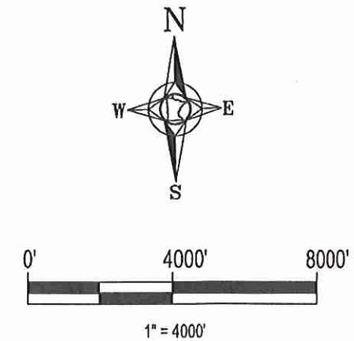

NOTES:

REFERENCE: VIRGINIA AND MCKINLEY QUADRANGLE 7.5 MINUTE SERIES

NO.	DATE	DESCRIPTION	DRAWN	DATE	CHECK
1	6-7-2013	ORIGINAL ISSUE	SRP	6-7-2013	RC

NTS
526 CHESTNUT STREET
VIRGINIA MINNESOTA 55792
218-741-4290

SLCRLF SPRAYFIELD EXPANSION
VIRGINIA, MN

FIGURE - 1
SITE LOCATION MAP

PROJECT NUMBER: 5062P
DATE: 6-7-2013

1

D:\CADD\Projects\5062P SLCRLF Spray Field\5062P Sprayfield expansion_SP Alvg_Fig-1 Site Vicinity 6\11\2013 1:37:00 PM

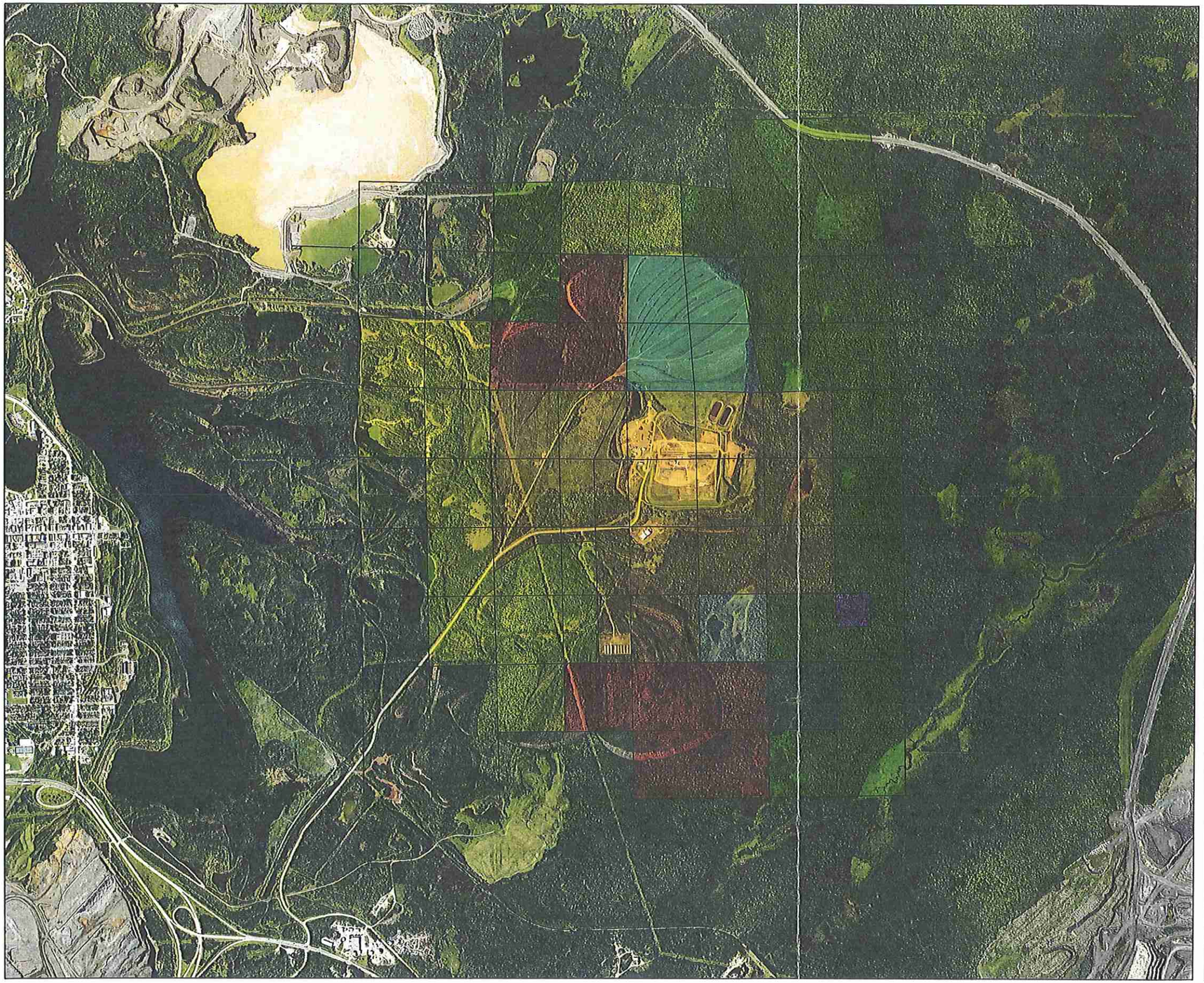

N
W E
S

0' 2000' 4000'

1" = 2000'

LEGEND:

- PROPERTY BOUNDARIES
- SLUDGE DISPOSAL AUTHORITY PROPERTY
- SAMARGIA, JOHN M. ETAL
- FEPERDO LLC PROPERTY
- PERSHERM, DENNIS R. ETAL
- ST. LOUIS COUNTY PROPERTY
- STATE OF MINNESOTA PROPERTY
- RGGS LAND AND MINERALS LTD LP PROPERTY
- CITY OF VIRGINIA (SURFACE OWNERSHIP) - MINERAL RIGHTS RETAINED BY RGGS

NOTES:

REFERENCE: AERIAL FSA2010

PROPERTY BOUNDARIES DERIVED FROM ST. LOUIS COUNTY PLAT INFORMATION

NO.	DATE	DESCRIPTION	DRAWN	DATE	CHECK
1	6-7-2013	ORIGINAL ISSUE	SRP	6-7-2013	RC

NTS
526 CHESTNUT STREET
VIRGINIA MINNESOTA 55792
218-741-4290

SLCRLF SPRAYFIELD EXPANSION
VIRGINIA, MN

FIGURE - 2
PROPERTY OWNERSHIP MAP

PROJECT NUMBER: 5062P
DATE: 6-7-2013

2

P:\CAD\Projects\5062P SLCRLF Spray Field\5062P Sprayfield expansion_SP.dwg, Fig 2 Site Location, 6/11/2013 1:50:11 PM

N
W E
S

0' 500' 1000'

1" = 500'

LEGEND:

- ⊕ EXISTING MONITORING WELL
- ——— QUAD CITIES BIOSOLIDS SLUDGE AUTHORITY
- PROPOSED EXPANSION AREA

NOTES:

REFERENCE: FSA2010

NO.	DATE	DESCRIPTION	DRAWN	DATE	CHECK
1	6-7-2013	ORIGINAL ISSUE	SRP	6-7-2013	RC

NTS
526 CHESTNUT STREET
VIRGINIA MINNESOTA 55792
218-741-4290

SLCRLF SPRAYFIELD EXPANSION
VIRGINIA, MN

FIGURE - 3
SITE OVERVIEW MAP

PROJECT NUMBER: 5062P
DATE: 6-7-2013

3

P:\CAD\Projects\5062P SLCRLF Spray Field\5062P Sprayfield expansion_SP.dwg, Fig-3 Site Detail, 6/11/2013 2:33:50 PM

N

0 200 400 800

Feet

1 inch = 400 feet

Legend

- Quad Cities Biosolids Sludge Authority
- Fields
- Proposed Sprayfield Expansion

NTS
526 Chestnut Street
Virginia, MN 55792-1142
218.741.4290

Version	Description	Drawn	Date	Checked	Date
1	Original Issue	SRP	Date	PM	Date

SLCRLF Sprayfield Expansion
Virginia, MN

Figure 4
Sprayfield Expansion Layout

NTS Project #: 5062P

Date: 11 June 2013

4

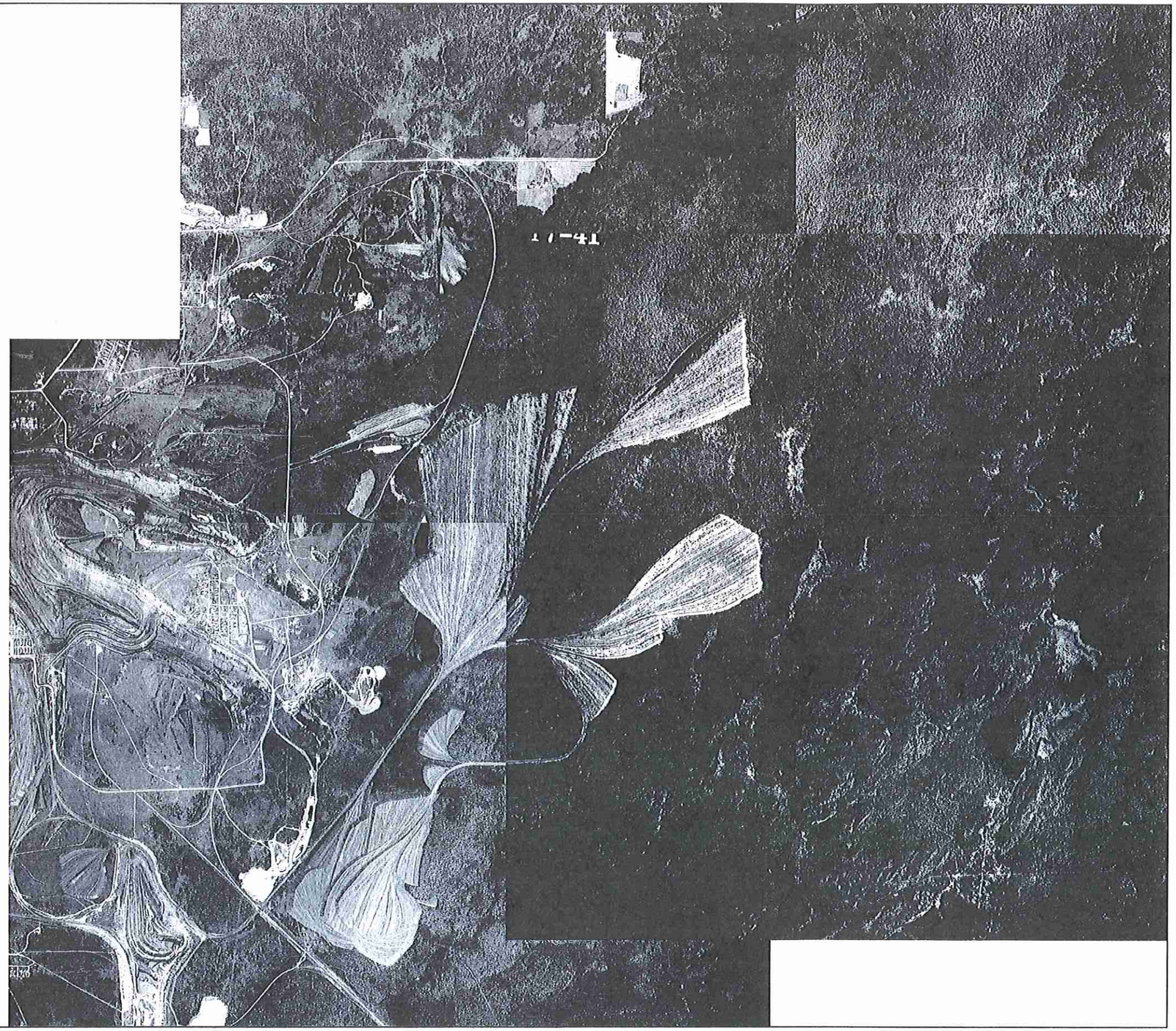

NOTES:

REFERENCE: HISTORICAL AERIAL FROM MINNESOTA DNR LANDVIEW.

NO.	DATE	DESCRIPTION	DRAWN	DATE	CHECK
1	6-7-2013	ORIGINAL ISSUE	SRP	6-7-2013	RC

NTS
526 CHESTNUT STREET
VIRGINIA MINNESOTA 55792
218-741-4290

SLCRLF SPRAYFIELD EXPANSION
VIRGINIA, MN

FIGURE 5A
HISTORICAL AERIAL 1941

PROJECT NUMBER: 5062P
DATE: 6-7-2013

5A

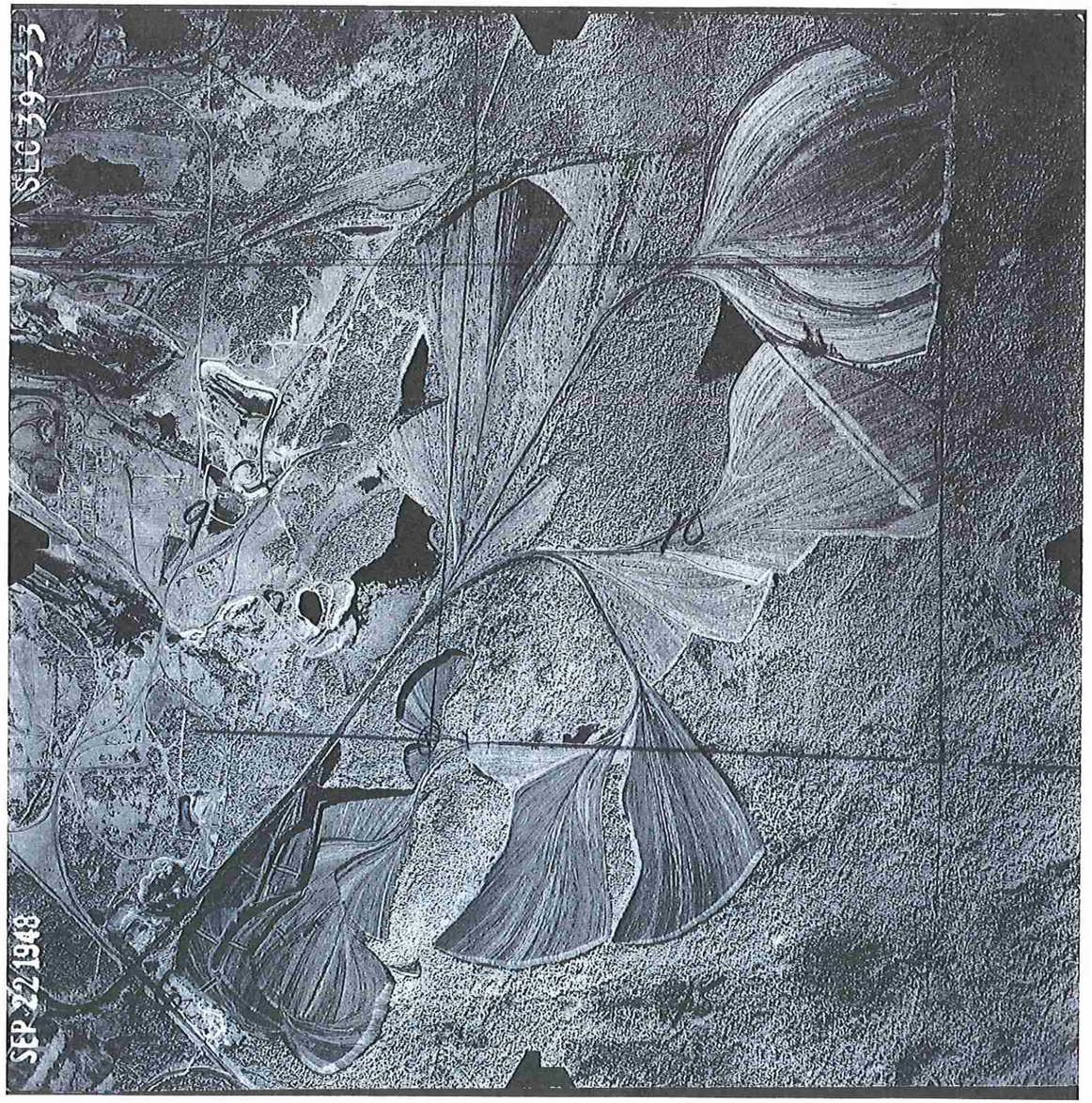

NOTES:

REFERENCE: HISTORICAL AERIAL FROM MINNESOTA DNR LANDVIEW.

NO.	DATE	DESCRIPTION	DRAWN	DATE	CHECK
1	6-7-2013	ORIGINAL ISSUE	SRP	6-7-2013	RC

NTS
526 CHESTNUT STREET
VIRGINIA MINNESOTA 55792
218-741-4290

SLCRLF SPRAYFIELD EXPANSION
VIRGINIA, MN

FIGURE 5B
HISTORICAL AERIAL 1948

PROJECT NUMBER: 5062P
DATE: 6-7-2013

5B

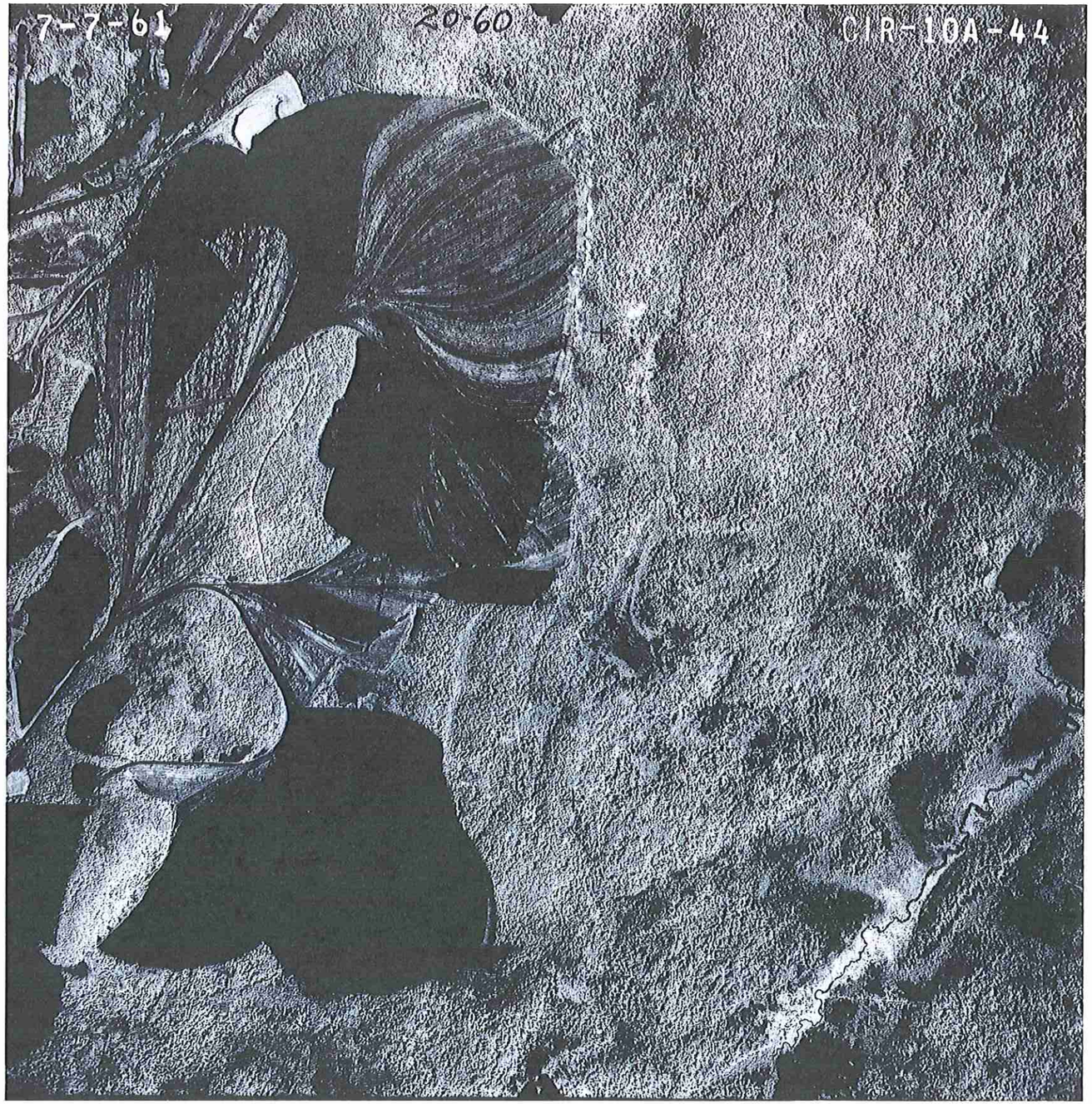

NOTES:

REFERENCE: HISTORICAL AERIAL FROM MINNESOTA DNR LANDVIEW.

NO.	DATE	DESCRIPTION	DRAWN	DATE	CHECK
1	6-7-2013	ORIGINAL ISSUE	SRP	6-7-2013	RC

NTS
526 CHESTNUT STREET
VIRGINIA MINNESOTA 55792
218-741-4290

SLCRLF SPRAYFIELD EXPANSION
VIRGINIA, MN

FIGURE 5C
HISTORICAL AERIAL 1961

PROJECT NUMBER: 5062P
DATE: 6-7-2013

5C

NOTES:

REFERENCE: HISTORICAL AERIAL FROM MINNESOTA DNR LANDVIEW.

NO.	DATE	DESCRIPTION	DRAWN	DATE	CHECK
1	6-7-2013	ORIGINAL ISSUE	SRP	6-7-2013	RC

NTS
526 CHESTNUT STREET
VIRGINIA MINNESOTA 55792
218-741-4290

SLCRLF SPRAYFIELD EXPANSION
VIRGINIA, MN

FIGURE 5D
HISTORICAL AERIAL 1972

PROJECT NUMBER: 5062P
DATE: 6-7-2013

5D

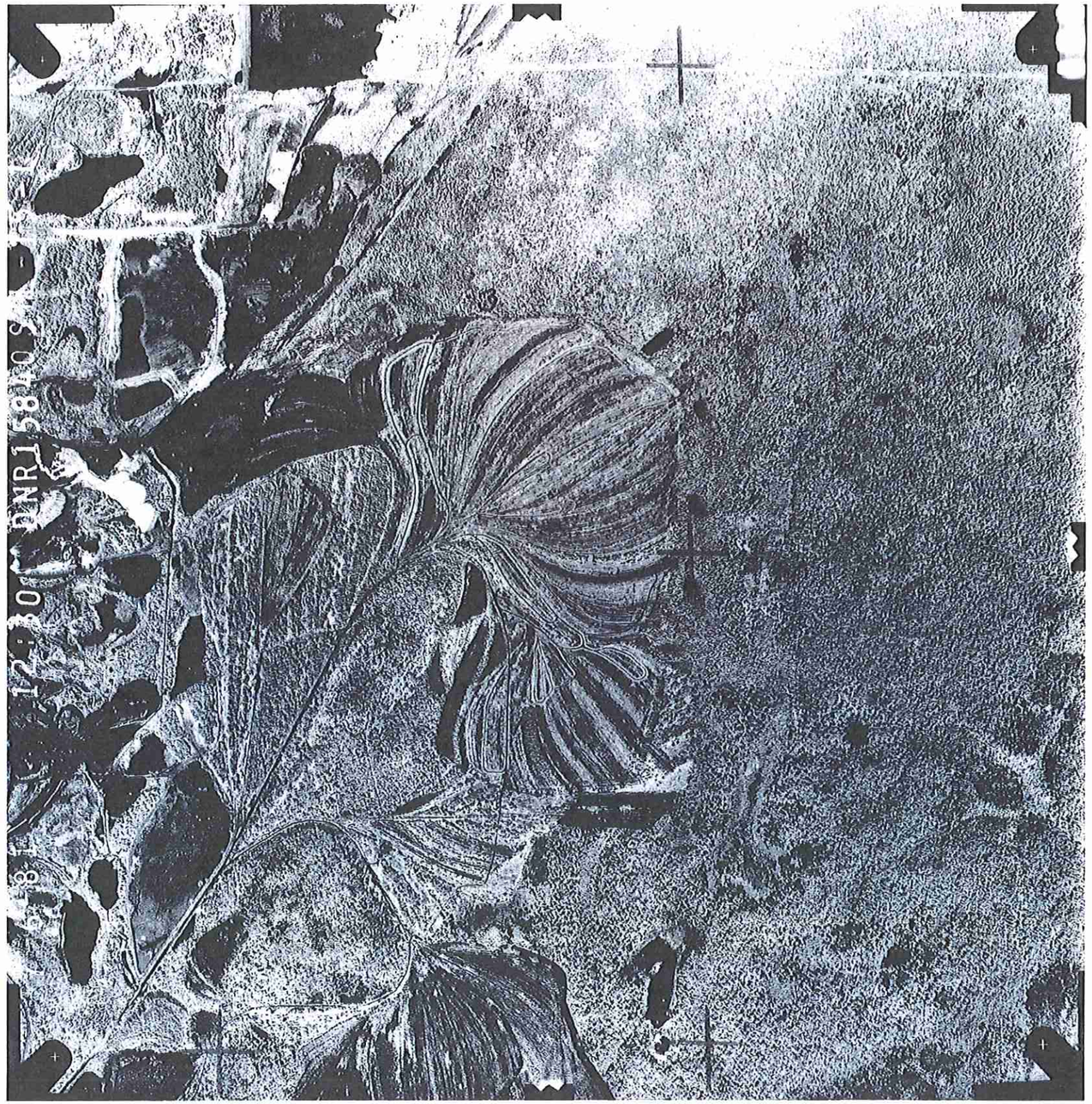

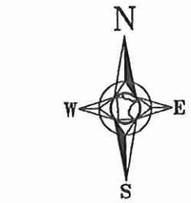

NOTES:

REFERENCE: HISTORICAL AERIAL FROM MINNESOTA DNR LANDVIEW.

NO.	DATE	DESCRIPTION	DRAWN	DATE	CHECK
1	6-7-2013	ORIGINAL ISSUE	SRP	6-7-2013	RC

NTS
526 CHESTNUT STREET
VIRGINIA MINNESOTA 55792
218-741-4290

SLCRLF SPRAYFIELD EXPANSION
VIRGINIA, MN

FIGURE 5E
HISTORICAL AERIAL 1981

PROJECT NUMBER: 5062P
DATE: 6-7-2013

5E

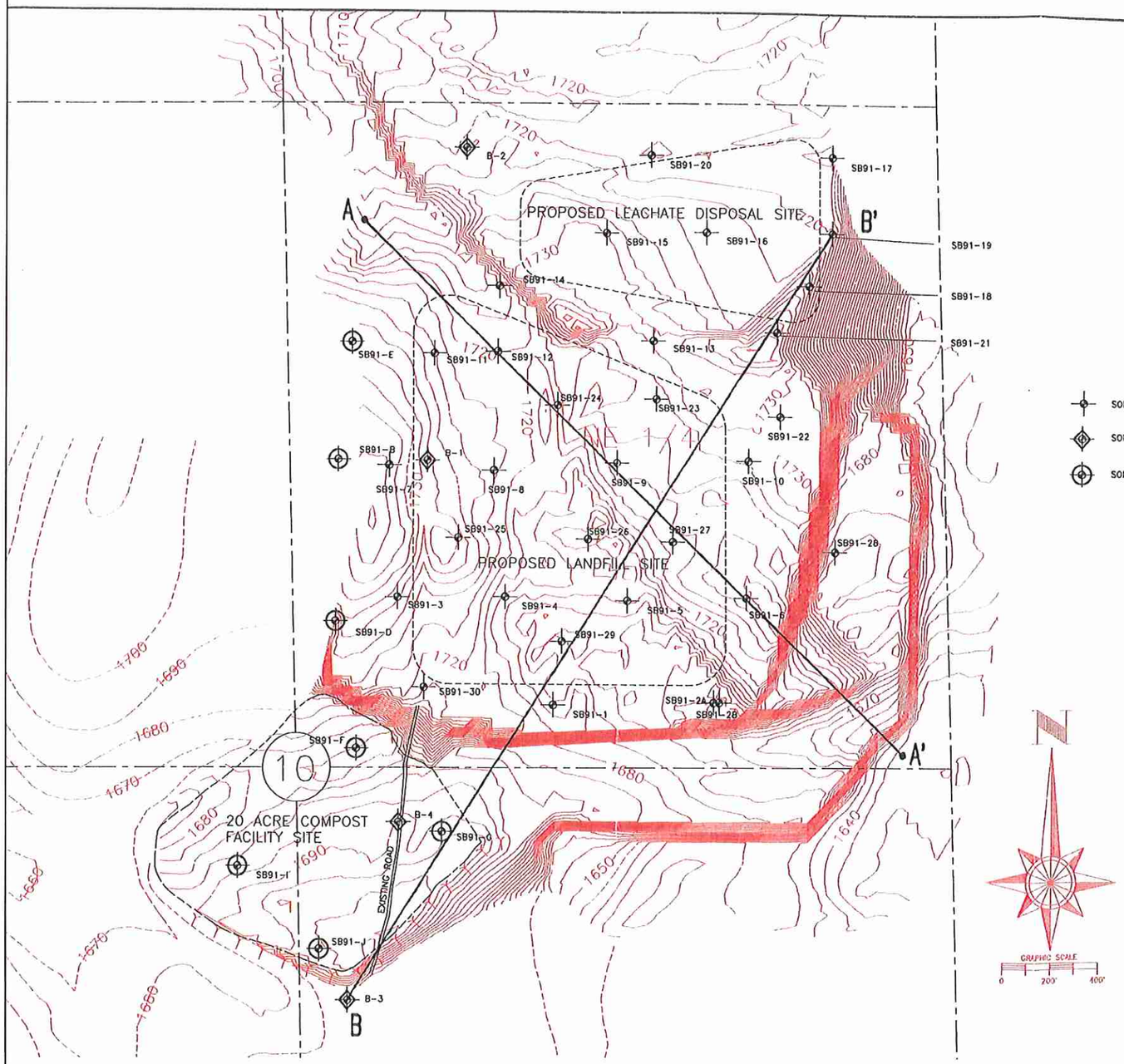

LEGEND

- SOIL BORINGS BY AMERICAN ENGINEERING 1991
- SOIL BORINGS BY KOLSTAD-OLSON DRILLING 1991
- SOIL BORINGS BY GME CONSULTANTS INC 1991

FIGURE 10

Soil Boring Locations and Cross-section Locations

• St. Louis County •
Phase II Detailed Site Investigation

RREM, Inc. Engineering and Environmental Consultants

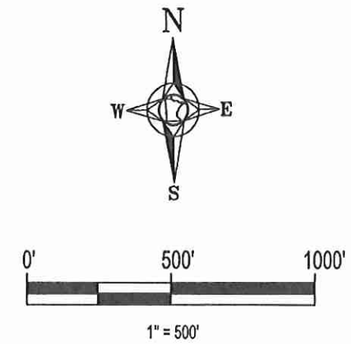

NOTES:

REFERENCE: FIGURE EXCEPTED FROM ST. LOUIS COUNTY COUNTY STATE OF THE ART REGIONAL LANDFILL - PHASE II DETAILED SITE INVESTIGATION REPORT (HYDROGEOLOGIC EVALUATION OF THE PROPOSED ST. LOUIS COUNTY REGIONAL LANDFILL)
PREPARED BY RREM, INC., NTS, INC., BAKER ENGINEERING, INC.

NO.	DATE	DESCRIPTION	DRAWN	DATE	CHECK
1	6-7-2013	ORIGINAL ISSUE	SRP	6-7-2013	RC

NTS
526 CHESTNUT STREET
VIRGINIA MINNESOTA 55792
218-741-4290

SLCRLF SPRAYFIELD EXPANSION
VIRGINIA, MN

FIGURE 6
SOIL BORING AND CROSS-SECTION LOCATIONS FROM PHASE II

PROJECT NUMBER: 5062P
DATE: 6-7-2013

6

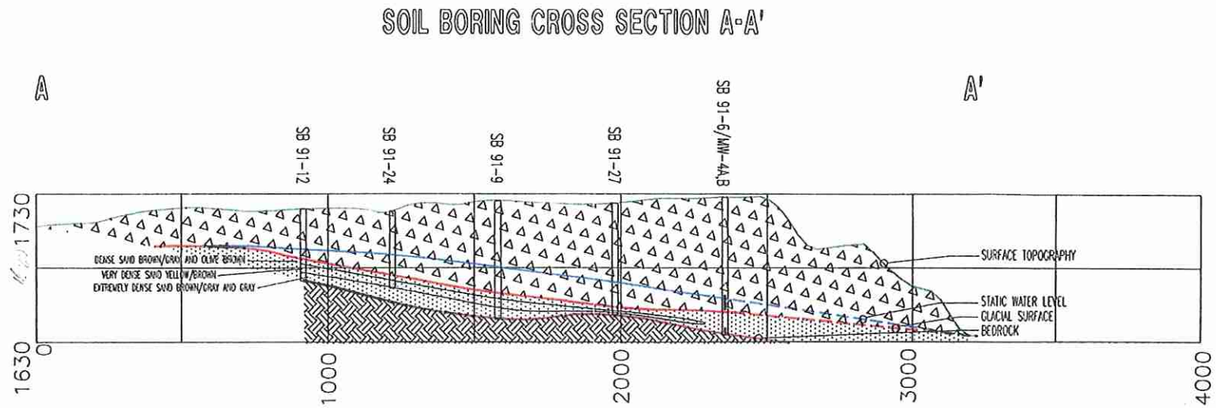

FIGURE 17

A - A' Cross-Section

• St. Louis County •
Phase II Detailed Site Investigation

RREM, INC. Engineering and Environmental Consultants

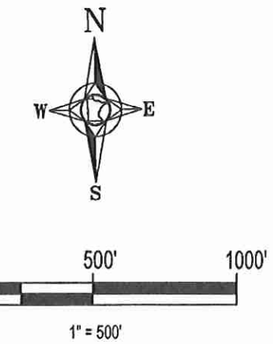

NOTES:

REFERENCE: FIGURE EXCEPTED FROM ST. LOUIS COUNTY COUNTY STATE OF THE ART REGIONAL LANDFILL - PHASE II DETAILED SITE INVESTIGATION REPORT (HYDROGEOLOGIC EVALUATION OF THE PROPOSED ST. LOUIS COUNTY REGIONAL LANDFILL)
PREPARED BY RREM, INC., NTS, INC., BAKER ENGINEERING, INC.

NO.	DATE	DESCRIPTION	DRAWN	DATE	CHECK
1	6-7-2013	ORIGINAL ISSUE	SRP	6-7-2013	RC

NTS
526 CHESTNUT STREET
VIRGINIA MINNESOTA 55792
218-741-4290

SLCRLF SPRAYFIELD EXPANSION
VIRGINIA, MN

FIGURE 7
A-A' CROSS SECTION
FROM PHASE II

PROJECT NUMBER: 5062P
DATE: 6-7-2013

7

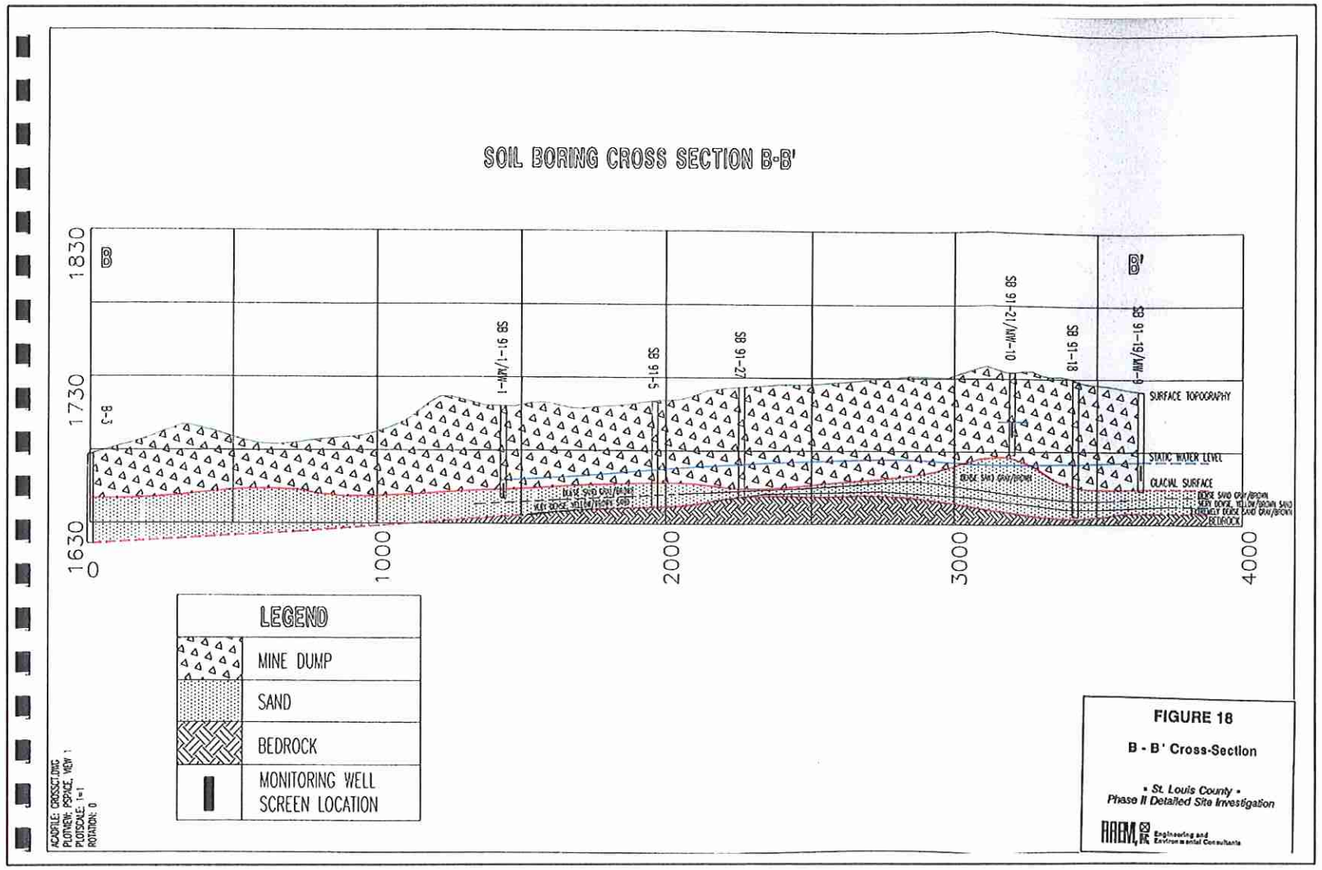

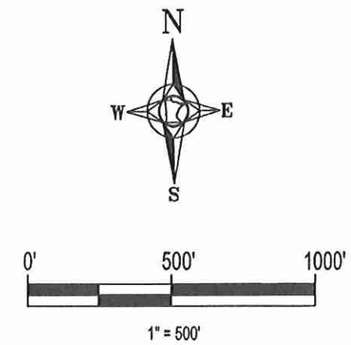

NOTES:

REFERENCE: FIGURE EXCEPTED FROM ST. LOUIS COUNTY COUNTY STATE OF THE ART REGIONAL LANDFILL - PHASE II DETAILED SITE INVESTIGATION REPORT (HYDROGEOLOGIC EVALUATION OF THE PROPOSED ST. LOUIS COUNTY REGIONAL LANDFILL)
PREPARED BY RREM, INC., NTS, INC., BAKER ENGINEERING, INC.

NO.	DATE	DESCRIPTION	DRAWN	DATE	CHECK
1	6-7-2013	ORIGINAL ISSUE	SRP	6-7-2013	RC

NTS
526 CHESTNUT STREET
VIRGINIA MINNESOTA 55792
218-741-4290

SLCRLF SPRAYFIELD EXPANSION
VIRGINIA, MN

FIGURE 8
B-B' CROSS SECTION
FROM PHASE II

PROJECT NUMBER: 5062P
DATE: 6-7-2013

8

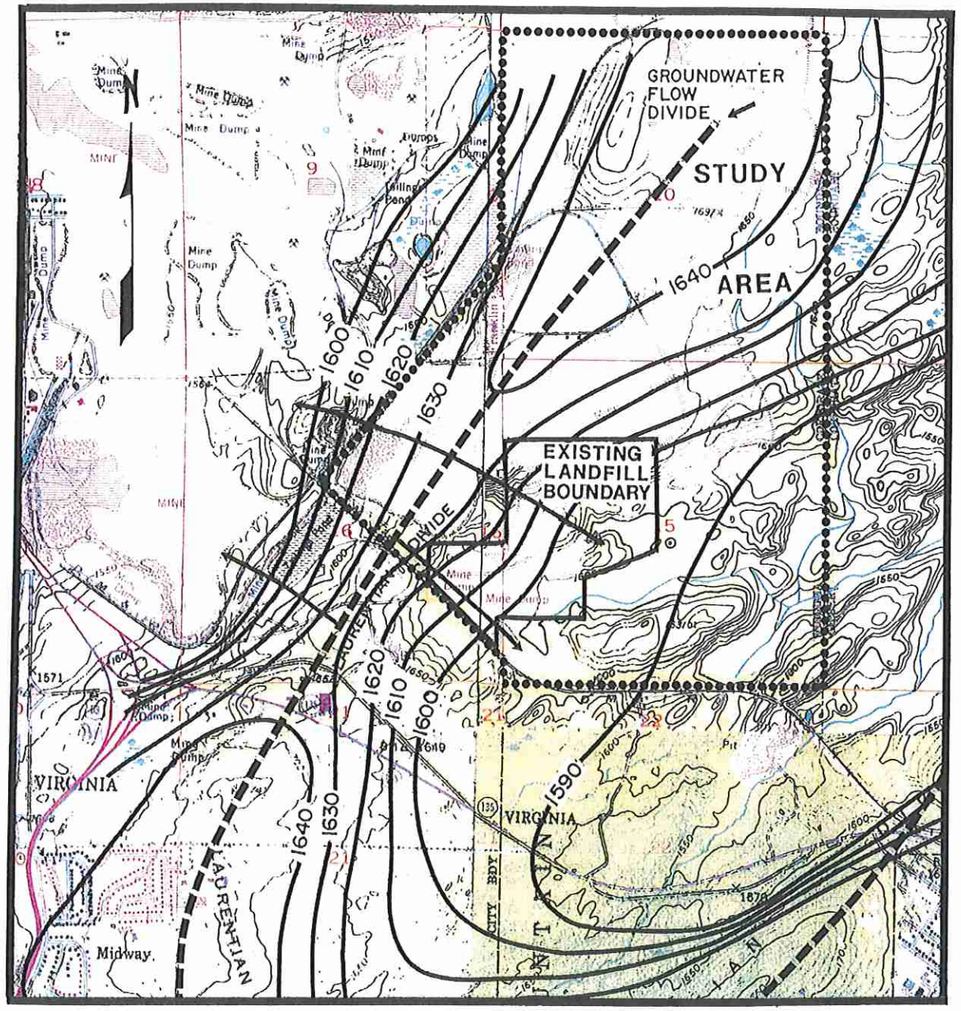

LEGEND

— — SURFACE DRAINAGE PATH

1610 — GROUNDWATER CONTOUR C.I. = 10 FEET

SCALE 1" = 2000'

(from Hickok and Assoc., 1988)

REGIONAL GROUNDWATER FLOW

RREM Inc.
environmental consultants

FIGURE 12

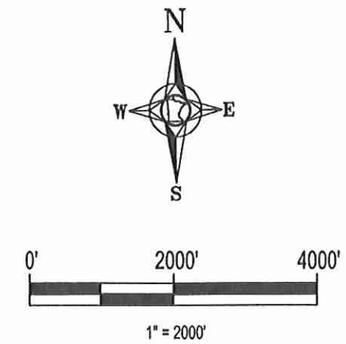

NOTES:

REFERENCE: FIGURE EXCEPTED FROM ST. LOUIS COUNTY COUNTY STATE OF THE ART REGIONAL LANDFILL - PRELIMINARY SITE EVALUATION REPORT PREPARED BY RREM, INC., NTS, INC., BAKER ENGINEERING, INC.

NO.	DATE	DESCRIPTION	DRAWN	DATE	CHECK
1	6-7-2013	ORIGINAL ISSUE	SRP	6-7-2013	RC

NTS
526 CHESTNUT STREET
VIRGINIA MINNESOTA 55792
218-741-4290

SLCRLF SPRAYFIELD EXPANSION
VIRGINIA, MN

FIGURE 9
REGIONAL GROUNDWATER FLOW
FROM PRELIMINARY SITE EVALUATION

PROJECT NUMBER: 5062P
DATE: 6-7-2013

9

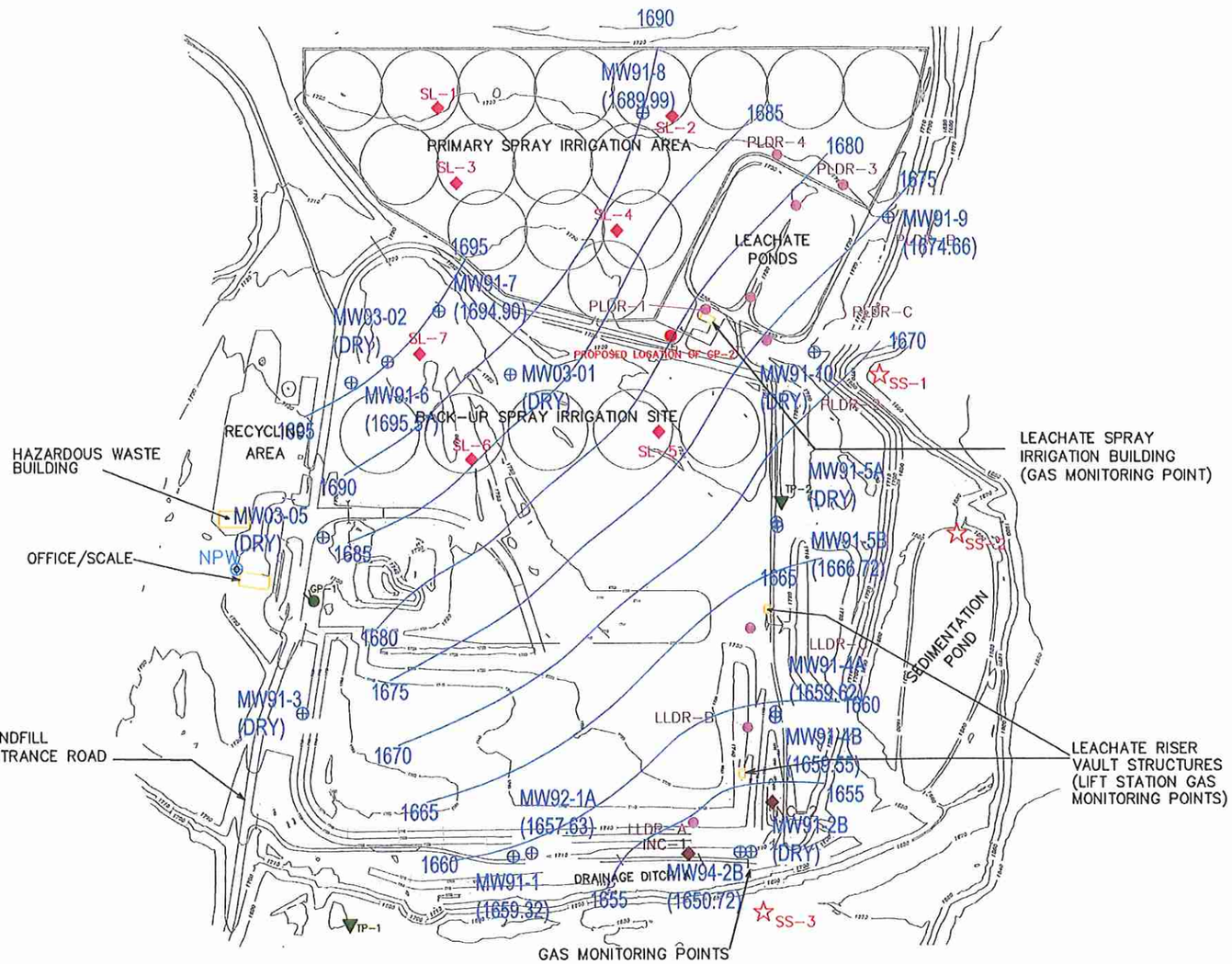

N
W E
S

0' 400' 800'

1" = 400'

LEGEND

⊕	MONITORING WELL
(1674.66)	STATIC WATER ELEVATION
———	GROUNDWATER ELEVATION CONTOURS

NOTES:

NO.	DATE	DESCRIPTION	DRAWN	DATE	CHECK
1	6-7-2013	ORIGINAL ISSUE	SRP	6-7-2013	RC

NTS
526 CHESTNUT STREET
VIRGINIA MINNESOTA 55792
218-741-4290

SLCRLF SPRAYFIELD EXPANSION
VIRGINIA, MN

FIGURE - 10
GROUNDWATER CONTOUR MAP
OCTOBER 2012

PROJECT NUMBER: 5062P
DATE: 6-7-2013

10

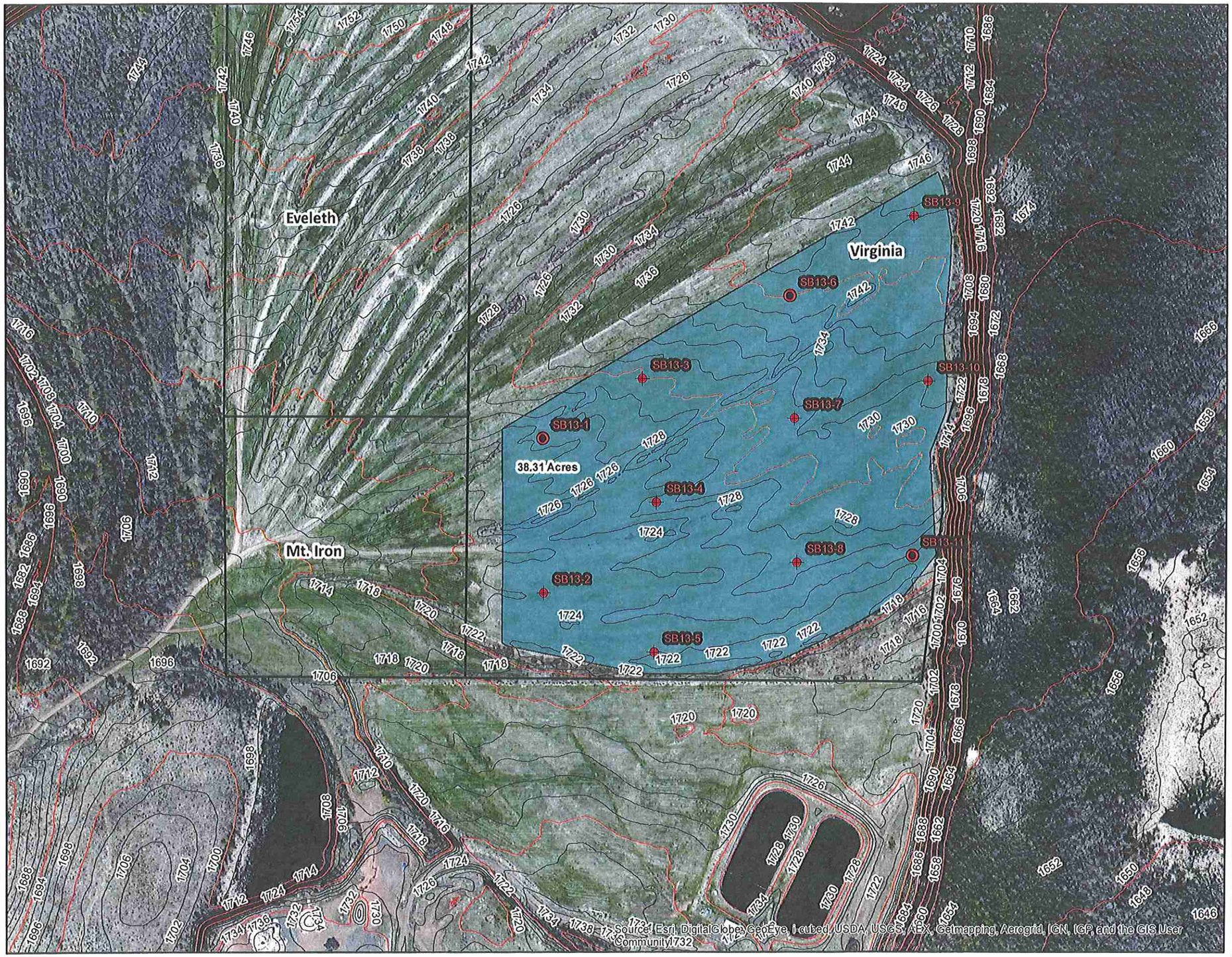

N

0 165 330 660

Feet

1 inch = 335 feet

Legend

- Proposed boring & Temp Well
- Proposed Boring & Well Nest
- Quad Cities Biosolids Sludge Authority
- Index Contour
- Intermediate Contour
- Proposed Sprayfield Expansion

NTS
526 Chestnut Street
Virginia, MN 55792-1142
218.741.4290

Version	Description	Drawn	Date	Checked	Date
1	Original Issue	SRP	11 June 2013	RC	11 June 2013

SLCRLF Sprayfield Expansion
Virginia, MN

Figure 11
Proposed Boring Map

NTS Project #: 5062P

Date: 11 June 2013

11

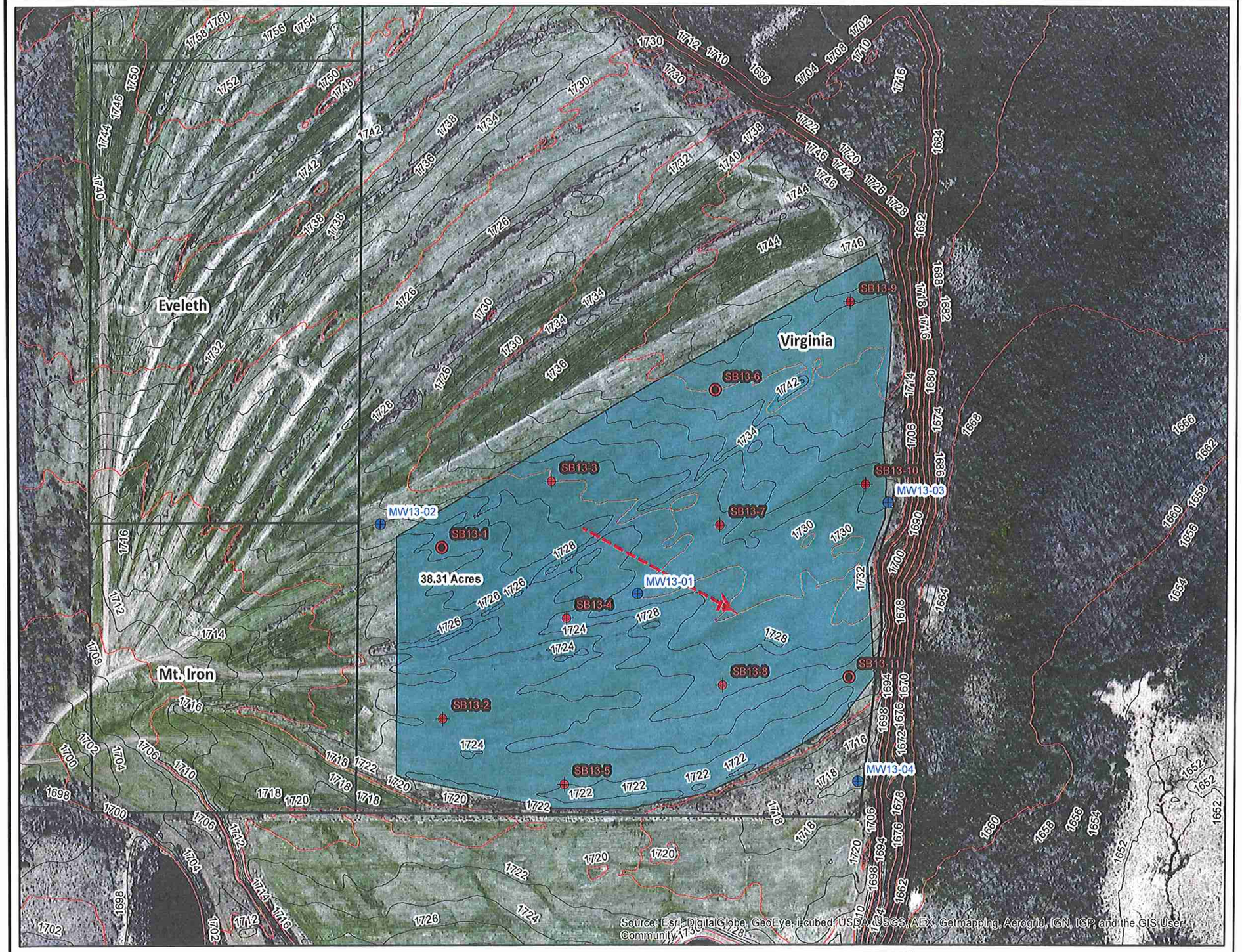

N

0 150 300 600

Feet

1 inch = 300 feet

Legend

- Proposed Monitoring Well
- Proposed boring & Temp Well
- Proposed Boring & Well Nest
- Inferred Groundwater Flow Direction
- Quad Cities Biosolids Sludge Authority
- Index Contour
- Intermediate Contour
- Proposed Sprayfield Expansion

NTS
526 Chestnut Street
Virginia, MN 55792-1142
218.741.4290

Version	Description	Drawn	Date	Checked	Date
1	Original Issue	SRP	11 June 2013	RC	11 June 2013

SLCRLF Sprayfield Expansion
Virginia, MN

Figure 12
Proposed Monitoring System

NTS Project #: 5062P

Date: 11 June 2013

12

APPENDICES

APPENDIX A

1998 BIOSOLIDS SITE APPLICATION FORM

2012 BIOSOLIDS ANNUAL REPORT

CITY OF VIRGINIA

327 FIRST STREET SOUTH • VIRGINIA, MINNESOTA 55792-2623

November 24, 1998

Mayor Carolyn Gentilini
City of Virginia
327 1st First Street South
Virginia, Minnesota 55792

Mr. Ted Troolin
St. Louis County Solid Waste Director
307 South First Street
Virginia, Minnesota 55792

Dear Mayor Carolyn Gentilini:

This letter is written to provide you with information about our intent to obtain approval from the Minnesota Pollution Control Agency (MPCA) for the application of biosolids on the Biosolids Disposal Site Authority property located in the SE ¼ of Section 3 T58N R17W. Biosolids are reclaimed through wastewater treatment and are beneficial to crops and soil because of their fertilizer value and organic content. Reports on our land application program are submitted to and reviewed annually by the MPCA.

At this time, we are forwarding this letter and a site application to the MPCA for approval of the site and management practices. Enclosed for your reference is a table of general management practices and conditions which apply to the land application of biosolids.

The site application has been prepared by Mr. Micheal L. Appelwick and Mr. Tim Satrang who are certified by the MPCA as a Type IV operator for the handling of biosolids. They have reviewed the site characteristics and determined acceptable management practices for compliance with the State of Minnesota's rules for the land application of biosolids. If you have questions or want additional information about our program, please contact Mr. Micheal L. Appelwick or Mr. Tim Satrang at (218) 741-4290.

If you have comments or questions about the approval of the site, they should be directed to Ms. Jorja DuFresne of the MPCA Water Quality Division within thirty days of the mailing date of this letter at (612) 296-9292.

The MPCA will approve or deny the utilization of these sites in writing after the thirty-day comment period. You will receive a copy of that letter.

Sincerely,

CITY OF VIRGINIA WASTEWATER TREATMENT PLANT

Micheal L. Appelwick

MLA:mak

Enclosure

cc: Mr. Donald Kleinschmidt, Chairman Biosolids Disposal Authority
Mr. Les Peterson, City of Virginia Biosolids Disposal Authority
Ms. Jorja DuFresne, MPCA St. Paul Office

MPCA GENERAL MANAGEMENT REQUIREMENTS FOR AGRICULTURAL SITES

The following separation distances must be maintained from each of the following features if they exist at the application site for the given application method.

Criteria	Surface Applied	Incorporation within 48 hrs.	Injection
Allowable slopes	0%-6%	0%-12%	0%-12%
Distance to wells			
Private supply	200 ft.	200 ft.	200 ft.
Public supply	1000 ft.	1000 ft.	1000 ft.
Irrigation	50 ft.	25 ft.	25 ft.
Distance to residences[1]	200 ft.	200 ft.	100 ft.
Distance to residential development[1]	600 ft.	600 ft.	300 ft.
Distance to public contact site	600 ft.	600 ft.	300 ft.
Surface Water Features			
Down Gradient[2] Lakes, Rivers, Streams, Type 3,4, and 5 Wetlands, Intermittent Streams[3], Tile Inlets connected to these surface waters, and Sinkholes			
Slope 0%-6%	200 ft.	50 ft.	50 ft.
Slope >6%-12%	not allowed	100 ft.	100 ft.
Grassed Waterways[4]			
Slope 0%-6%	100 ft.	33 ft.	33 ft
Slope 6%-12%	not allowed	33 ft.	33 ft.

[1]Separation distances may be reduced with written permission from all persons responsible for residential developments and places of recreation and all persons inhabiting within the otherwise protected distance.

[2]If downgradient surface water does not receive runoff because the site is bermed, separation distances can be reduced to 33 feet.

[3]For the purpose of this item, intermittent stream means a drainage channel with definable banks that provides for runoff flow to any of the surface waters listed in this item during snow melt or rainfall events.

[4]Separation distances are from the centerline of grassed waterways. For grassed waterways which are wider than these separation distances, application is allowed to the edge of the grass strip. Grassed waterways are natural or constructed, typically broad and shallow, and seeded to grass as protection against erosion.

Frozen or Snow-Covered Ground

During the time the ground is frozen or snow-covered, application of biosolids is allowed only on land with slopes of 0 to 2%. In addition to the slope requirement, application of liquid biosolids is restricted to a maximum rate of 15,000 gallons per acre and the separation distance to Surface Water Features in the table above increases to 600 ft.

Public Access

Access to agricultural application sites by the general public must be controlled for 30 days. The MPCA considers private farm land inaccessible to the general public due to the Minnesota Trepass Law. However, if the site is located in an area where public access is not easily controlled, signs or fences may be necessary to prevent the public from trespassing.

Application Rates

The application rate of biosolids is based on the nitrogen needs of the crop to be grown on the site. All other forms of nitrogen fertilizers that may be applied for the same crop must be taken into account when determining the biosolids application rate. This is done to ensure that excess nitrogen, which could potentially impact our water resources, is not applied.

MPCA BIOSOLIDS SITE APPLICATION FORM

This form must be completed in full or it will be returned. The information requested is required to be sent to the MPCA pursuant to Minn. R. ch. 7041.

Site Information: Complete the following information for each site. Make photocopies of this form if needed.

1. **Site Code:** VA-01

2. **Landowner Name:** Biosolids Disposal
   Address: Site Authority
   327 1st St. S -City Hall
   Virginia, MN 55792

3. **Land Occupier Name:** City of Virginia
   Address: Wastewater Treatment
   327 1st St. South
   Virginia, MN 55792

4. **Legal Description**
   Quarter / Section: SE 1/4 of Sec 3
   Township Coordinate: T 58 N
   Range Coordinate: R 17 W
   Township Name: City of Virginia
   County Name: St. Louis
   Total Approvable Acreage: 85.9

5. **Attach a soils map obtained from the Natural Resources Conservation Service (NRCS), or a comparable map prepared by a Soil Scientist. Delineate the following on the map (enlarge if necessary):**

   a) Boundaries of each site (approvable acreage)
   b) Locations of any long-term dewatered biosolids storage areas
   c) Location of all tile lines - (transfer tile location data to the soil map)
   d) Location of all tile inlets
   e) Areas which will not be utilized for biosolids applications (identify by coloring or crosshatching) Be sure the map shows the features for which setbacks occur.

6. **List all highly permeable soil on the site: [This information is obtained from the NRCS.]**

   Disturbed Mineland Soils overburden
   Stockpile - No soil interpretation data
   Available - estimated 50 feet
   to original land surface less than 2% slope

7. **Tile Drainage (Y/N)?** N
   Tile Spacing: N
   Tile Depth: N

8. **Soil Analysis:**

Sampling Date:	6/15/98	6/15/98
Texture (USDA):	Medium (Sandy-Loam)	Medium (Sandy-Clay-Loam)
Organic Matter (%):	2.9	2.9
Extractable Phosphorus (ppm):	92	117
Exchangeable Potassium (ppm):	100	130
pH:	7.2	7.5
Soluble Salts (mmhos/cm):	0.4	0.3

CROPPING AND SITE MANAGEMENT

Complete the information for crop rotations and application rates for each site. Identify crops which will most likely be grown, realistic yield goals, maximum available nitrogen application (MANA) rates, and the agronomic rate of biosolids associated with the MANA rate. Provide the analysis used in the calculations in percent: KJELDAHL-N 2.68% NH_3-N 0.20% TOTAL SOLIDS 21.2%.

1. Site Code: VA-01

2. Crop Types	Realistic Yield Goal (give units)	MANA Rate (lb/acre)	Agronomic Rate of Biosolids Allowed (Dry Tons/acre)	(Gal.or wet tons/acre)
Timothy	1.0 Ton/Acre	75	6.3	29.7
Alsike				
Brome Grass				
Rye Grass				

3. Circle the months that the site will be utilized for application: 1 2 3 4 5 6 7 8 9 10 11 12

1. Site Code: _____

2. Crop Type	Realistic Yield Goal (give units)	MANA Rate (lb/acre)	Agronomic Rate of Biosolids Allowed (Dry Tons/acre)	(Gal.or wet tons/acre)

3. Circle the months that the site will be utilized for application: 1 2 3 4 5 6 7 8 9 10 11 12

1. Site Code: _____

2. Crop Type	Realistic Yield Goal (give units)	MANA Rate (lb/acre)	Agronomic Rate of Biosolids Allowed (Dry Tons/acre)	(Gal.or wet tons/acre)

3. Circle the months that the site will be utilized for application: 1 2 3 4 5 6 7 8 9 10 11 12

CITY OF GILBERT
SOUTHEAST PART CITY OF VIRGINIA NORTH PART CITY OF EVELETH

T. 58 N.—R. 17 W.

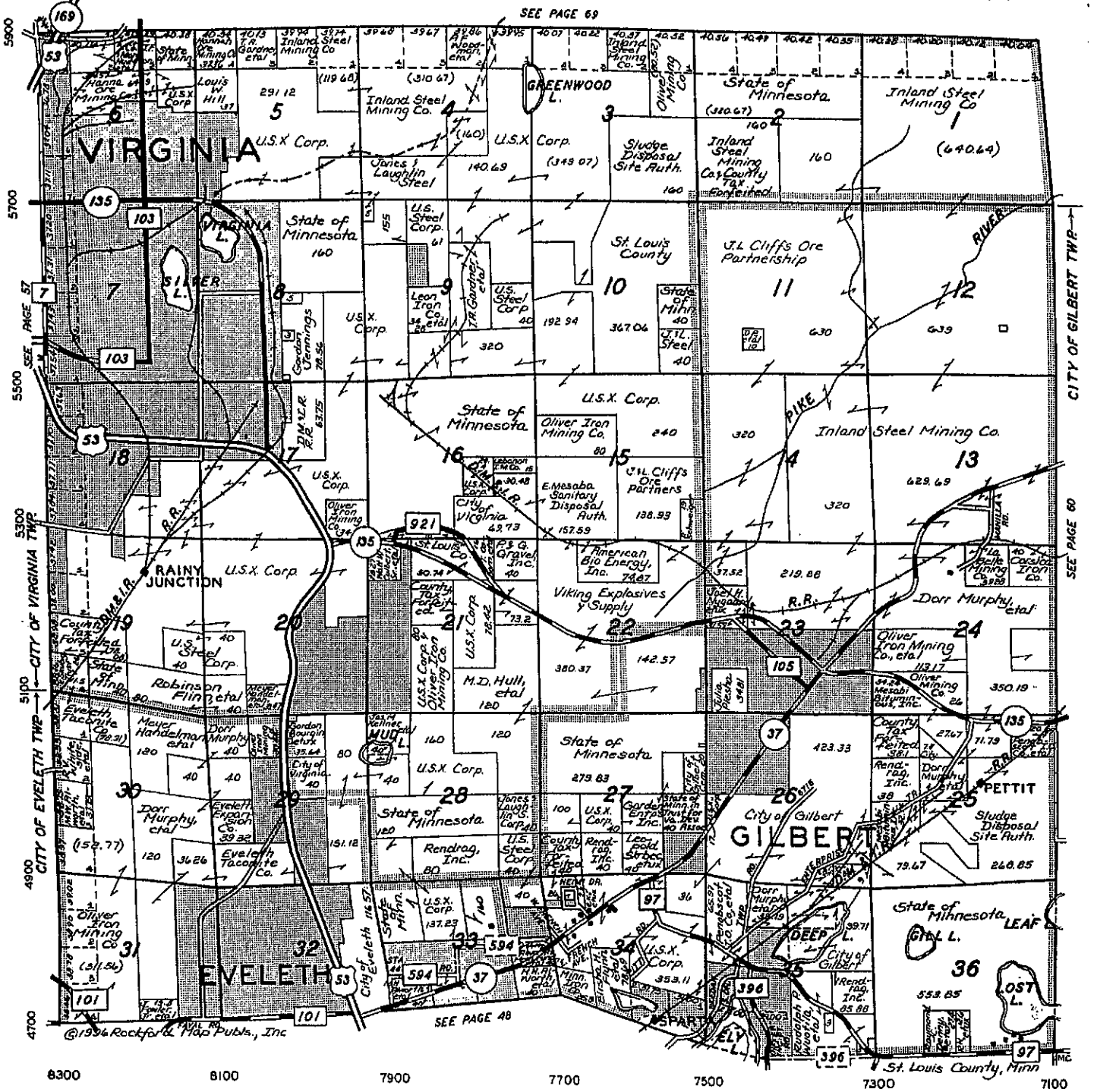

FIRST NATIONAL
Bank of Gilbert
2 North Broadway — Gilbert, Minnesota 55741
(218) 741-7844
FDIC INSURED
A FULL SERVICE BANK

VICINITY MAP

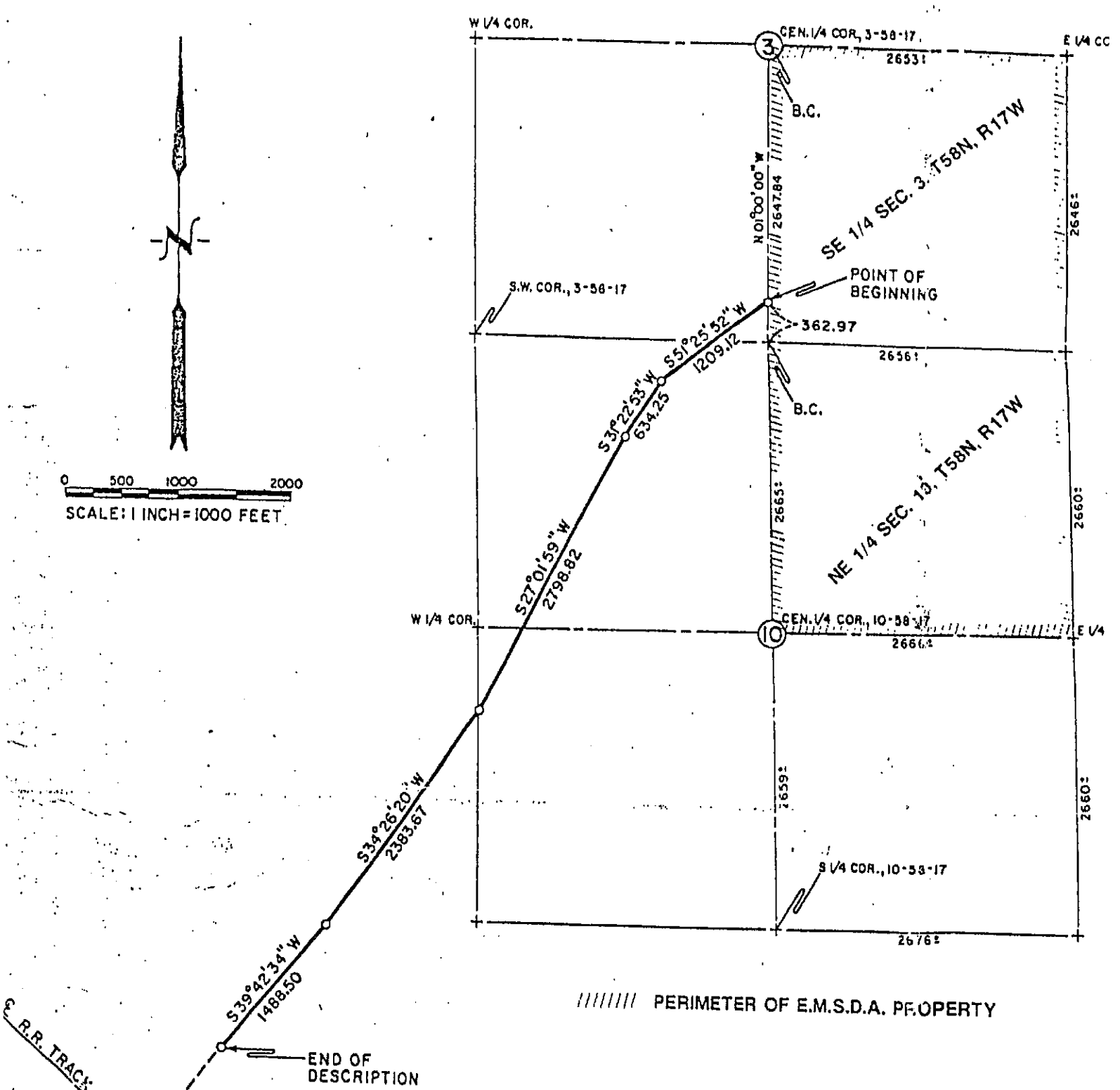

CENTERLINE DESCRIPTION FOR A 66' ROAD

Assuming the North and South center quarter line of Section 3, Township 58 North, Range 17 West of the 4th Principal Meridian to run N 01° 00' 00" W and beginning at a point on said line that is 362.97 feet North of the South quarter corner of said section; thence run S 51° 25' 52" W for 1209.12 feet; thence S 31° 22' 53" W for 634.25 feet; thence S 27° 01' 59" W for 2798.82 feet; thence S 34° 26' 20" W for 2383.67 feet; thence S 39° 42' 34" W for 1488.50 feet to the approximate East right of way of a North-South road and there terminating.

NTS

NORTHEAST TECHNICAL SERVICES, INC.

Virginia Biosolids Site

N

INITIALS	REVISION DAT
DRAWN BY:	
REVIEWED BY:	
JOB #:	FIGURE NUMBER:
DWG FILE:	
SCALE:	

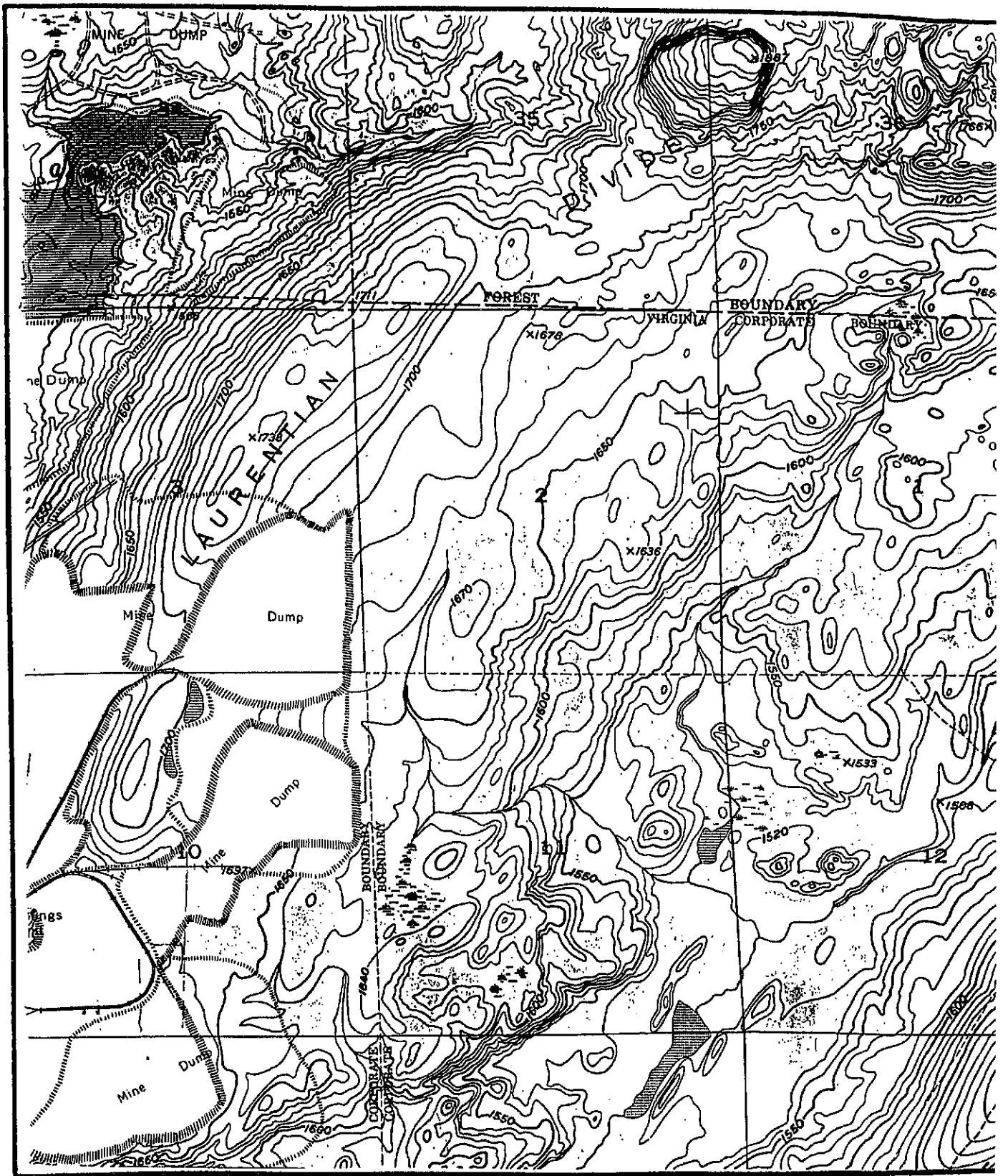

NTS

NORTHEAST TECHNICAL SERVICES, INC.

Virginia Biosolids Site

N

INITIALS	REVISION DATE
DRAWN BY:	
REVIEWED BY:	
JOB #:	FIGURE NUMBER:
DWG FILE:	
SCALE:	

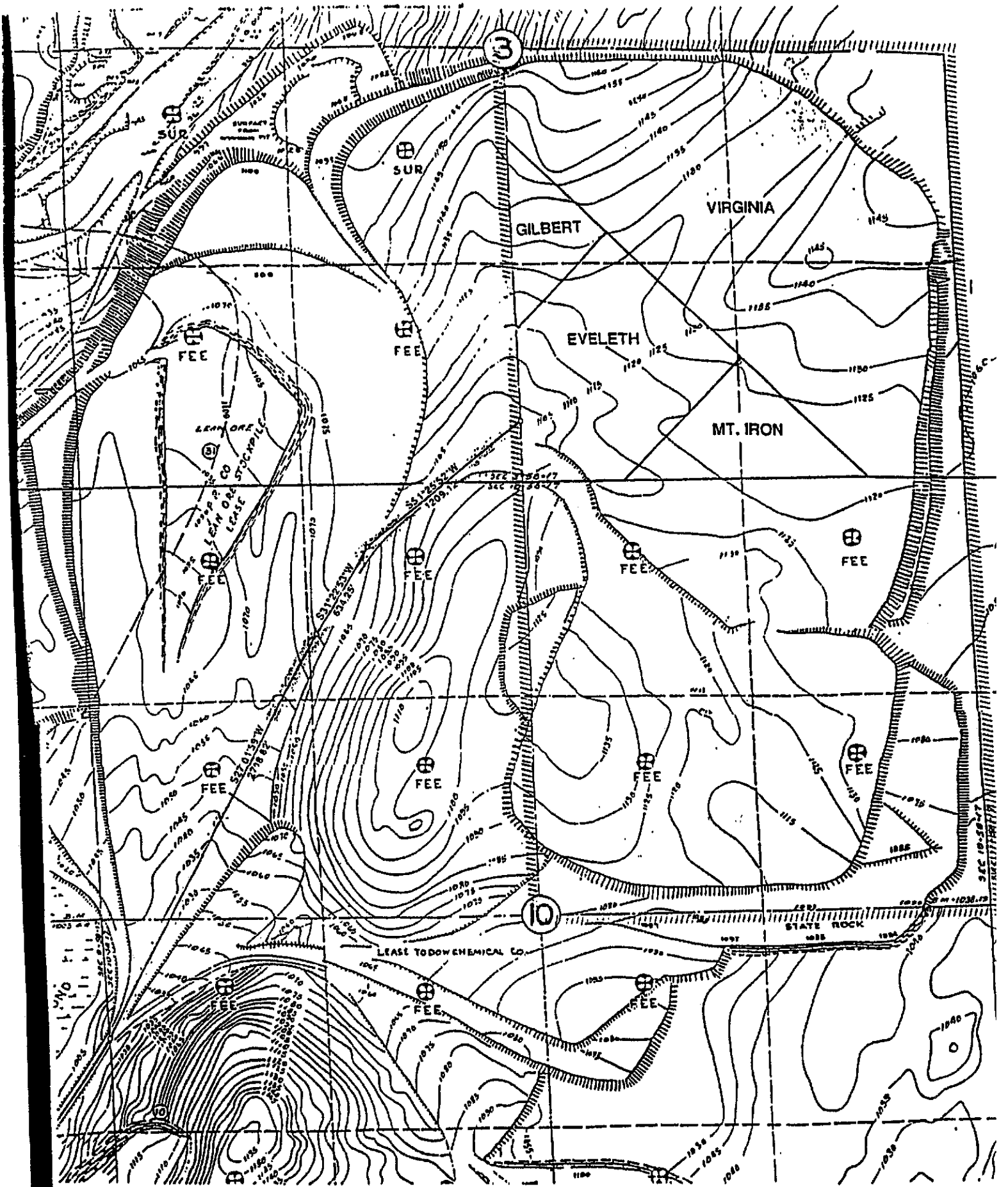

EAST MESABA SANITARY DISPOSAL AUTHORITY
SLUDGE DISPOSAL SITE

PLAN FOR DIVISION OF THE AREA ON TOP OF SURFACE DUMP IN SEC. 3, T58N, R17W.

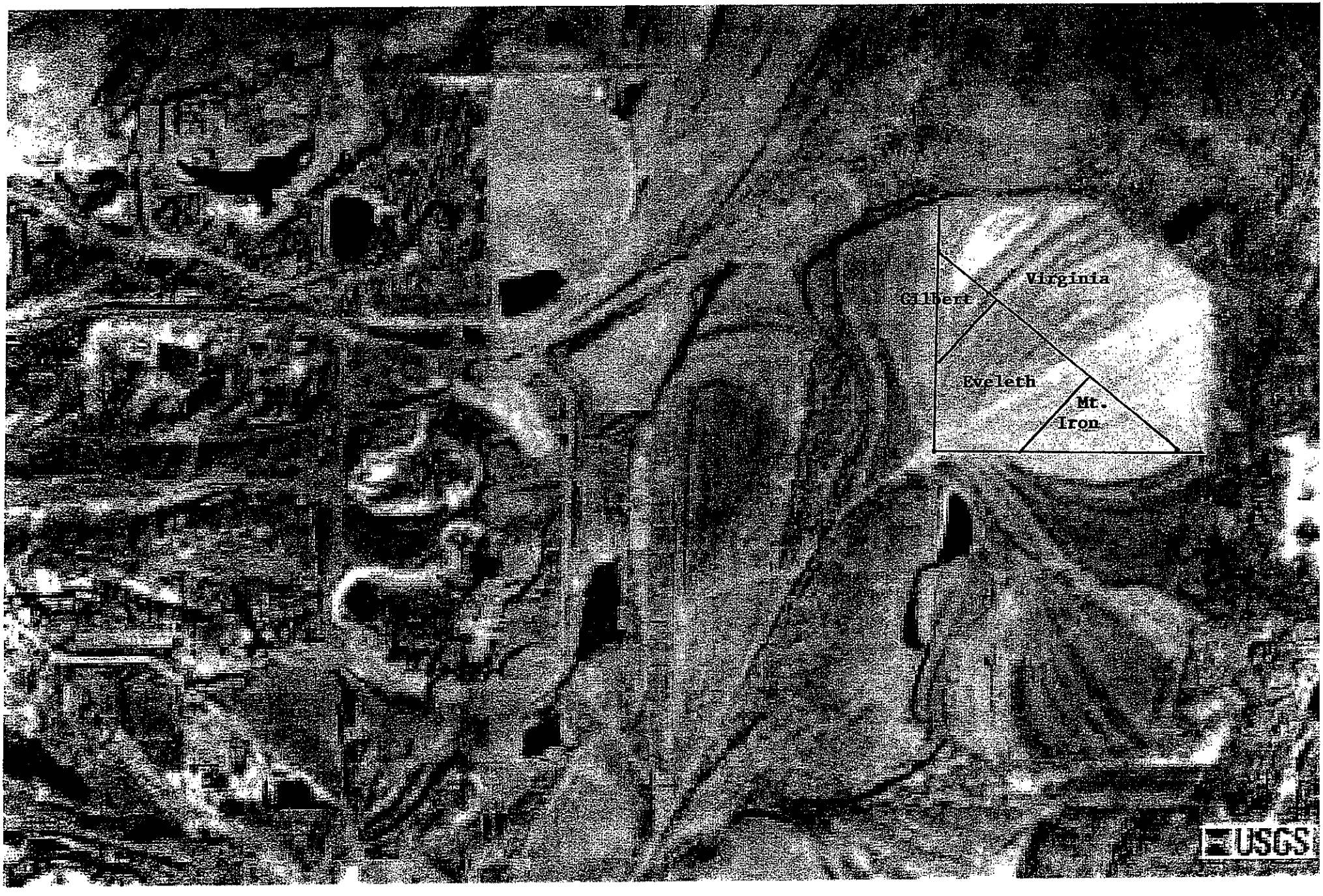

May 14, 1991

MVTL LABORATORIES, Inc.
P.O. BOX 249, 1126 N. FRONT STREET
NEW ULM, MN 56073-0249
PHONE (507) 354-8517 WATS (800) 782-3557 FAX (507) 359-2890

MEMBER ACIL

WE ARE AN EQUAL OPPORTUNITY EMPLOYER

Report To: City of Virginia
City Hall
Virginia, MN 55792

Date: 25 Jun 1998
Work Order: 11-0835
Date Received: 22 Jun 1998

Project: Virginia

Soil Sample Identification	South Field
Laboratory Number	22490

Analyses:

Water pH	7.5
Buffer Index	7.2
Organic Matter %	2.9
Olsen- Phosphorus (ppm)	117
Potassium (ppm)	130

Lime Requirements in lbs/acre of Pure $CaCO_3$ to adjust pH for a 6" depth	(pH 6.5)	None
	(pH 6.0)	None

Sand %	62.5
Silt %	15.0
Clay %	22.5
Texture	Medium (Sandy-Clay-Loam)
Specific Conductance (mmhos/cm)	0.3

cc: Mike Appelwick - NE Tech

MVTL guarantees the accuracy of the analysis done on the sample submitted for testing. It is not possible for MVTL to guarantee that a test result obtained on a particular sample will be the same on any other sample unless all conditions affecting the sample are the same, including sampling by MVTL. As a mutual protection to clients, the public and ourselves, all reports are submitted as the confidential property of clients, and authorization for publication of statements, conclusions or extracts from or regarding our reports is reserved pending our written approval.

MVTL LABORATORIES, Inc.
P.O. BOX 249, 1126 N. FRONT STREET
NEW ULM, MN 56073-0249
PHONE (507) 354-8517 WATS (800) 782-3557 FAX (507) 359-2890

MEMBER ACIL

WE ARE AN EQUAL OPPORTUNITY EMPLOYER

Report To: City of Virginia
City Hall
Virginia, MN 55792

Date: 25 Jun 1998
Work Order: 11-0835
Date Received: 22 Jun 1998

Project: Virginia

Soil Sample Identification	North Field
Laboratory Number	22489

Analyses:

Water pH	7.2
Buffer Index	7.3
Organic Matter %	2.9
Bray-I Phosphorus (ppm)	92
Potassium (ppm)	100

Lime Requirements in lbs/acre of Pure $CaCO_3$ to adjust pH for a 6" depth	(pH 6.5)	None
	(pH 6.0)	None

Sand %	57.5
Silt %	22.5
Clay %	20.0
Texture	Medium (Sandy-Loam)
Specific Conductance (mmhos/cm)	0.4

cc: Mike Appelwick - NE Tech

MVTL guarantees the accuracy of the analysis done on the sample submitted for testing. It is not possible for MVTL to guarantee that a test result obtained on a particular sample will be the same on any other sample unless all conditions affecting the sample are the same, including sampling by MVTL. As a mutual protection to clients, the public and ourselves, all reports are submitted as the confidential property of clients, and authorization for publication of statements, conclusions or extracts from or regarding our reports is reserved pending our written approval.

AMERICAN ENGINEERING TESTING, INC.

SUBSURFACE BORING LOG

AET JOB NO: 91-8022 LOG OF BORING NO. 91-17 (p. 1 of 4)

PROJECT: PROPOSED REGIONAL LANDFILL, ST. LOUIS COUNTY; VIRGINIA, MN

SURFACE ELEVATION: 1118.43'

DEPTH IN FEET	MATERIAL DESCRIPTION	GEOLOGY	BPF	MC	SAMPLE TYPE	REC. IN.	WC	DEN	LL	PL	%-200
1	This is a Subsurface boring log of the mine stockpile immediately South of the Biosolids site, representing a general classification of the stock pile. - CP										
2											
3											
4											
5			21	M	SS	16					
6											
7											
8	Miscellaneous Mine Fill - Silty sand with gravel, cobbles and boulders, medium dense to loose, reddish brown to brown	MINE OVERBURDEN FILL									
9											
10			7	M	SS	13					
11											
12											
13											
14											
15			6	M	SS	13					
16											
17											
18											
19											
20			8	M	SS	10					
21											

DEPTH:	DRILLING METHOD
0-79.5'	4.25" HSA
79.5-86.5'	ROTARY, WATER
BORING COMPLETED:	11/14/91
CC:	CA: Rig:

WATER LEVEL MEASUREMENTS

DATE	TIME	SAMPLED DEPTH	CASING DEPTH	CAVE-IN DEPTH	DRILLING FLUID LEVEL	WATER LEVEL
11/13/91	3:34	66.5	64.5	61.2		60.7
11/14/91	8:30	71.5	69.5	67.2		59.0

NOTE: REFER TO THE ATTACHED SHEETS FOR AN EXPLANATION OF TERMINOLOGY ON THIS LOG

4/90

AMERICAN ENGINEERING TESTING, INC.

SUBSURFACE BORING LOG

AET JOB NO: 91-8022

LOG OF BORING NO. 91-17 (p. 2 of 4)

PROJECT: PROPOSED REGIONAL LANDFILL, ST. LOUIS COUNTY; VIRGINIA, MN

DEPTH IN FEET	MATERIAL DESCRIPTION	GEOLOGY	BPF	MC	SAMPLE TYPE	REC. IN.	FIELD & LABORATORY TESTS WC	DEN	LL	PL	%-200
23											
24											
25			9	M	SS	8					
26											
27											
28											
29											
30	Miscellaneous Mine Fill - Silty sand with gravel, cobbles and boulders, with layers of clay, medium dense, brown	MINE OVERBURDEN FILL	12	M	SS	8					
31											
32											
33											
34											
35			27	M	SS	18					
36											
37											
38											
39											
40			14	M	SS	6					
41											
42											
43											
44											
45			18	M	SS	8					
46											
47											

Environmental Consultants, Project Managers & Support Services

December 28, 2012

Ms. Jorja A. DuFresne
Minnesota Pollution Control Agency
520 Lafayette Road North
St. Paul, Mn. 55155-4194

Re: City of Virginia – NPDES/SDS Permit #MN0030163
2012 Biosolids Annual Report

Please find enclosed Virginia Wastewater Treatment Plant, Biosolids Annual Report for the past crop year, September 1, 2011 through August 31, 2012. Biosolids were land applied in October 2011 and June 2012. Biosolids were also transferred during the crop year from Virginia to the Grand Rapids Wastewater Treatment Plant. The City of Gilbert transferred lime stabilized Biosolids to land spreading on the Virginia/Great Scott (VA-GS-01N) site for land application. The site specific land application and transfer information is included in the annual report. The land applications did not exceed applicable limits for nitrogen or metals.

If you should have any questions regarding this report, please feel free to contact me at (218) 780-5672 or e-mail: mappelwick@netechnical.com.

Sincerely,
Northeast Technical Services, Inc.

Micheal L. Appelwick
Executive Vice President/Principal

MLA: rjd

CC: Mayor Louis Russo – City of Virginia

526 CHESTNUT STREET • P.O. BOX 1142 • VIRGINIA, MINNESOTA 55792 • 218-741-4290 • FAX 218-741-4291
www.netechnical.com

Equal Opportunity Employer

Minnesota Pollution Control Agency
520 Lafayette Road North
St. Paul, MN 55155-4194

Biosolids Annual Report

Minnesota's Biosolids Program
Figure 11

The yearly completion and submittal of this form, including the certification statements, will fulfill the requirements of Minn. R. Chapter 7041 for annual reporting of biosolids landspreading activities. This form must be submitted to the Minnesota Pollution Control Agency (MPCA) at the address above **by December 31 following the cropping year.** *When bulk biosolids are applied, this form must be prepared by, or under the supervision of, a Type IV certified operator or inspector.*

Reporting period: September 1, 2011 **through August 31,** 2012

Facility Information

Facility name: Virginia Wastewater Treatment Plant **NPDES or SDS Permit number:** MN0030163

Contact person: Micheal L. Appelwick **Phone number:** 218-741-4290

Work address: PO Box 1142, Virginia, Mn. 55792

Check here if biosolids were not land applied during this cropping year: ☐

Total quantity of biosolids land applied as bulk material: _____ Gallons or _____ Wet tons **and** 495 Dry tons

Total quantity of Class A biosolids sold or given away in bags or other containers: NA Dry tons

Total quantity of biosolids transferred to another facility: _____ Dry tons **or** 363,800 Gallons

Transferred to what facility: Grand Rapids Contact person/phone # of facility: Jim Ackerman / 218-326-7195

(Gilbert transfer = 7.35 Dry tons included in VA-GS-01N Total)

Reporting of Biosolids Information

Pathogen reduction

Select the option/s used to meet pathogen reduction requirements:

Class B Options:

1. ☒ Geometric mean of fecal coliform determined
2. Process to Significantly Reduce Pathogens (PSRP) monitored:
   ☐ Aerobic ☒ Anaerobic ☐ Air dry ☐ Compost ☐ Lime
3. ☐ Process determined equivalent to a PSRP process monitored

Class A Options: (1 - 6 listed under 7041.1300, subp. 2, C)

☐ 1 ☐ 2 ☐ 3 ☐ 4 ☐ 5 ☐ 6

Describe how the Class A or Class B pathogen reduction requirement is met. For example, indicate what information was used and how it was evaluated to determine compliance. **(Do not submit daily data.)**

(3-1) Geometric mean
10/3/11-849 MPN/g-TS (stockpile)
5/17/12-716 MPN/g-TS (stockpile)
5/23/12-520 MPN/g-TS (stockpile)
7/26/12-747MPN/g-TS (stockpile)

Vector attraction reductions

Select the option/s by which vector attraction reduction was met: (For a detailed description of these options, see your Biosolids Manual or Minn. R. Chapter 7041.1400, subp. 2)

☐ A. 38% Volatile Solids Reduction (VSR)
☒ B. Bench Scale - Anaerobically Digested
☐ C. Bench Scale - Aerobically Digested
☐ D. SOUR Test: ≤ 1.5 mg oxygen/hour at 20 C
☐ E. Composted (aerobic/high temperature)
☐ F. Lime or Alkaline Stabilization
☐ G. Dried to 75% - for Stabilized Solids
☐ H. Dried to 90% - for Unstabilized Solids
☐ I. Injected
☐ J. Incorporated within six hours of application

For options A through H only, describe how the option was met. If VSR is calculated, indicate which equation was used, i.e. Van Kleek.

40 Day Anaerobic Digestion Bench Scale
10.2% reduction-12/1/11
7.3% reduction-3/15/12
13.6% reduction-7/12/12
9.4% reduction-1/31/12

Biosolids Analysis

	Sample # 1	Sample # 2	Sample # 3	Sample # 4	Sample # 5 Not included in average	Sample #	Average
Date/s of Sampling	10/3/11	3/13/12	5/17/12	9/26/12	04/03/12		
Date Sent to Lab	10/3/11	3/13/12	5/17/12	9/26/12	04/05/12		
Total Solids (%)	33.6	5.5	33.4	23.8	2.80		24.1
Total Volatile Solids (%)	29.3	33.9	29.0	34.3	0.54		31.6
Kjeldahl Nitrogen (%)	1.84	3.03	1.72	2.58	4.01		9.17
Ammonia Nitrogen (%)	0.300	1.10	0.388	0.480	1.03		2.86
Phosphorus (%)	1.93	2.68	1.92	1.95	2.10		2.12
Potassium (%)	0.07	0.17	0.07	0.11	2480		0.11
pH	8.0	7.5	7.9	8.2	7.2		7.9
Arsenic (mg/kg)	2.7	3.0	<2.9	<1.0	12.2		1.15
Cadmium (mg/kg)	0.9	1.2	0.29	0.40	1.7		0.70
Copper (mg/kg)	468	482	522	208	465		420
Lead (mg/kg)	22.5	29.9	19.4	10.5	42.3		20.6
Mercury (mg/kg)	0.62	0.55	0.96	1.1	1.4		0.81
Molybdenum (mg/kg)	11.0	11.1	>14.4	5.9	>14.7		10.6
Nickel (mg/kg)	10.6	12.1	12.2	5.3	21.3		10.1
Selenium (mg/kg)	1.3	2.9	<1.4	<1.0	6.6		1.65
Zinc (mg/kg)	399	418	420	207	1570		386

Parameter	Concentration (mg/kg)
Arsenic	38
Cadmium	43
Copper	2150
Lead	420
Mercury	28
Molybdenum	38
Nickel	210
Selenium	50
Zinc	3750

Greater sampling frequency

Compare your average biosolids values with those in the table on the left. List any parameters that have average values greater than the values in the table.

None _____ _____ _____

_____ _____ _____ _____

These parameters must be analyzed two times their minimum sampling frequency during **next year's cropping season**. Your minimum sampling frequency depends on the quantity of biosolids land applied.

Your minimum biosolids sampling frequency = 4X

Two times minimum biosolids sampling frequency = _____

Site Specific Information

Site Code (each site follows column down):	VA-01S	RM-01(E)	RM-01(W)
Landowner:	Biosolid Site Auth	Robert Mayry	Robert Mayry
Actual Acreage Receiving Biosolids:	30	6.5	9.5
Crop Grown This Year:	Mixed grass	Alfalfa	Alfalfa
Realistic Yield Goal (yield /acre):	2 tons	3 tons	3 tons
Crop Grown Previous Year:	Mixed grass	Alfalfa	Alfalfa
Soil Organic Matter*:	1.8	3.6	3.6
MANA Rate (lbs./acre):	75	90	90
Which Months Biosolids Were Land Applied:	Oct	Oct	Oct

*Use last soil test taken for organic matter content. Soil testing is required once in the three-year time period prior to land application unless stipulated otherwise in a permit or site approval letter. If soil tests were required to be taken for this reporting year, complete the following:

Soil Test Date Sampled:	7/29/09	9/7/11	9/7/11
Texture:	Coarse	Medium	Medium
Organic Matter:	1.8	3.6	3.6
Phosphorus:	44	11	11
Potassium:	42	49	49
pH:	7.5	7.4	7.4
Soluble Salts:	0.2	0.2 *8/15/07	0.2 *8/15/07

Application rates and methods:

Sample # or average used in following calculations:	1	1	1
Gallons or wet tons applied **per acre** this year:	22	28	28
Dry tons applied **per acre** this year:	6.9	8.7	8.7
Method: Surface/Inject/Incorporate (0 to 48 hrs.):	Surface	Surface	Surface
Nitrogen applied *(pounds/acre)*			
Available nitrogen applied in biosolids this year:	63.2	79.7	79.7
Carry-over nitrogen from 1 year ago:	0	0	0
Carry-over nitrogen from 2 years ago:	0	0	0
Nitrogen applied from other sources:	0	0	0
Total nitrogen applied:	**63.2**	**79.7**	**79.7**
	(TS - 31.6%)	(TS - 31.6%)	(TS - 31.6%)

Metals applied this year and cumulative *(pounds/acre)*

Concentration (mg/kg) X .002 X Dry tons/acre = pounds/acre of metal.
For cumulative metals, add all past metal loadings together.

Parameter	This Year	Cumulative	This Year	Cumulative	This Year	Cumulative
Arsenic	0.037	0.360	0.050	0.270	0.050	0.128
Cadmium	0.012	0.678	0.783	0.870	0.783	0.8150.04
Copper	6.458	69.991	8.140	6.927	8.140	23.526
Lead	0.311	12.899	0.392	2.256	0.392	1.392
Mercury	0.009	0.076	0.011	0.024	0.011	0.035
Molybdenum	0.152	1.020	0.191	0.788	0.191	0.364
Nickel	0.146	3.069	0.184	1.088	0.184	0.439
Selenium	0.018	0.184	0.023	0.293	0.023	0.120
Zinc	5.506	79.786	6.943	36.184	6.943	20.846

Site Specific Information

Site Code (each site follows column down):	VA-UT-01	Gilbert Biosolids Transfer VA-GS-01N	
Landowner:	United Taconite LLC	Biosolids Site Auth	
Actual Acreage Receiving Biosolids:	15	5.9	
Crop Grown This Year:	grass/hay	grass/hay	
Realistic Yield Goal (yield /acre):	5.8T	2.0	
Crop Grown Previous Year:	grass/hay	grass/hay	
Soil Organic Matter*:	0.6	2.9	
MANA Rate (lbs./acre):	100/200	50	
Which Months Biosolids Were Land Applied:	June	June	

*Use last soil test taken for organic matter content. Soil testing is required once in the three-year time period prior to land application unless stipulated otherwise in a permit or site approval letter. If soil tests were required to be taken for this reporting year, complete the following:

Soil Test Date Sampled:	**8/17/11**	**10/1/10**	
Texture:	ccoarse	sandy loam	
Organic Matter:	0.6	2.9	
Phosphorus:	2	81	
Potassium:	532	93	
pH:	8.2	7.6	
Soluble Salts:	0.4	0.3	

Application rates and methods:

Sample # or average used in following calculations:	**3**	**5**	
Gallons **or** wet tons applied **per acre** this year:	35.4 wet tons	10,114 gallons	
Dry tons applied **per acre** this year:	8.9	1.24	
Method: Surface/Inject/Incorporate (0 to 48 hrs.):	surface	surface	
Nitrogen applied ***(pounds/acre)***			
Available nitrogen applied in biosolids this year:	81.9	27.2	
Carry-over nitrogen from 1 year ago:	23.8	4.0	
Carry-over nitrogen from 2 years ago:	0	0	
Nitrogen applied from other sources:	0	0	
Total nitrogen applied:	**105.7**	**31.2**	
	(TS - 25%)	(TS - 3.0%)	

Metals applied this year and cumulative *(pounds/acre)*

Concentration (mg/kg) X .002 X Dry tons/acre = pounds/acre of metal.
For cumulative metals, add all past metal loadings together.

Parameter	This Year	Cumulative	This Year	Cumulative	This Year	Cumulative
Arsenic	0.052	0.322	0.030	0.128		
Cadmium	0.005	0.446	0.004	0.048		
Copper	9.292	16.680	1.153	14.914		
Lead	0.345	1.713	0.105	1.205		
Mercury	0.017	0.044	0.003	0.056		
Molybdenum	0.256	0.915	0.036	0.458		
Nickel	0.217	1.149	0.053	0.512		
Selenium	0.025	0.301	0.016	0.102		
Zinc	7.476	44.849	3.894	18.593		

Certification Statements for managing biosolids

Statement #1: Certification that preparer has checked if site has reached cumulative pollutant loading rate

This certification statement is not included on the annual report form. Copies are found in Figure 12 of the Land Application of Biosolids manual (see Minn. R. ch. 7041.1000, subp. 2, item B, for the requirement and 7041.1600, subp. 3, item M, for the certification statement.) Keep these signed certification statements in your records, but you do not need to include them with the annual report.

Statement #2: Certification that a Type IV operator or inspector prepared the annual report

I certify that the attached forms were prepared by myself or under my supervision.

12/28/2012

Signature of Type IV Certified Operator or Inspector — *Date*

Statement #3: Certification that pathogen reduction (for all facilities) and vector attraction reduction Options A through H (if chosen) were used — signed by biosolids preparer

Plain language: I have supervised preparing information that is used to determine if our biosolids program complies with the pathogen reduction and vector attraction reduction (VAR) requirements of the biosolids rules. Specifically, Item B *[insert one of items A through H — see page 1 of annual report for a list of options]* of Minn. R. ch. 7041.1400, subp. 2, was used to meet VAR requirements. In addition, those who gathered and evaluated this information are qualified to do so. I understand that I may be penalized for false certification.

Actual statement from rule: I certify, under penalty of law, that the information that will be used to determine compliance with the Pathogen Requirements in Minn. R. ch. 7041.1300, subp. 2, or 7041.1300, subp. 3, and the VAR requirement in _____ *[insert one of the vector attraction reduction requirements in Minn. R. ch. 7041.1400, subp. 2, A-H, if one of those requirements is met]* has been prepared under my direction and *supervision* in accordance with the system designed to ensure that qualified personnel properly gather and evaluate the information used to determine that the pathogen requirements (and vector attraction reduction requirements, if applicable) have been met. I am aware that there are significant penalties for false certification, including the possibility of fine and imprisonment.

12/28/2012

Signature of Type IV Certified Operator or Inspector — *Date*

Statement #4: Certification that management practices and vector attraction reduction Options I or J (if chosen) were used — signed by biosolids applier

Plain language: I supervised preparing information that is used to determine if our biosolids program complies with the management practices, site restrictions and VAR requirements of the biosolids rules. Specifically, Item _____ *[insert I for injection or J for incorporating within 6 hours of application]* of Minn. R. ch. 7041.1400, subp. 2, was used to meet VAR requirements. In addition, those who gathered and evaluated this information are qualified to do so. I understand that I may be penalized for false certification.

Actual statement from rule: I certify, under *penalty* of law, that the information that will be used to determine compliance with the Management Practices in Minn. R. ch. 7041.1200, the Site Restrictions in Minn. R. ch. 7041.1300, subp. 3, item D, and the VAR requirement in J *[insert Minn. R. ch. 7041.1400, subp. 2, I or J, if applicable]* for each site on which bulk biosolids is applied has been prepared under my direction and supervision according to the system designed to ensure that qualified personnel properly gather and evaluate the information used to determine that the management practices and site restrictions have been met. I am aware that there are significant penalties for false certification including the possibility of fine and imprisonment.

12/28/2012

Signature of Type IV Certified Operator or Inspector — *Date*

Management practices were met by: (Check appropriate boxes for compliance descriptions, or if needed, add your own description. *For example, mineland reclamation may not follow all agricultural site practices, such as those for slope.)*

- ☒ Biosolids were applied on sites approved by the MPCA according to Minn. R. ch. 7041.0800.
- ☒ Biosolids were applied according to the soil, slope, and separation distance requirements of Minn. R. ch. 7041.1200.

_____

_____

- ☒ A detailed description of how agronomic rate requirements were met is on page 3 of this Annual Report.
- ☒ The farmer was notified of the applicable site restrictions for harvesting crops, grazing and public access.

Certification Statements for managing biosolids

Statement #1: Certification that preparer has checked if site has reached cumulative pollutant loading rate

This certification statement is not included on the annual report form. Copies are found in Figure 12 of the Land Application of Biosolids manual (see Minn. R. ch. 7041.1000, subp. 2, item B, for the requirement and 7041.1600, subp. 3, item M, for the certification statement.) Keep these signed certification statements in your records, but you do not need to include them with the annual report.

Statement #2: Certification that a Type IV operator or inspector prepared the annual report

I certify that the attached forms were prepared by myself or under my supervision.

_____ _____

Signature of Type IV Certified Operator or Inspector *Date*

Statement #3: Certification that pathogen reduction (for all facilities) and vector attraction reduction Options A through H (if chosen) were used — signed by biosolids preparer

Plain language: I have supervised preparing information that is used to determine if our biosolids program complies with the pathogen reduction and vector attraction reduction (VAR) requirements of the biosolids rules. Specifically, item _____ *[insert one of items A through H — see page 1 of annual report for a list of options]* of Minn. R. ch. 7041.1400, subp. 2, was used to meet VAR requirements. In addition, those who gathered and evaluated this information are qualified to do so. I understand that I may be penalized for false certification.

Actual statement from rule: I certify, under penalty of law, that the information that will be used to determine compliance with the Pathogen Requirements in Minn. R. ch. 7041.1300, subp. 2, or 7041.1300, subp. 3, and the VAR requirement in _____ *[insert one of the vector attraction reduction requirements in Minn. R. ch. 7041.1400, subp. 2, A-H, if one of those requirements is met]* has been prepared under my direction and *supervision* in accordance with the system designed to ensure that qualified personnel properly gather and evaluate the information used to determine that the pathogen requirements (and vector attraction reduction requirements, if applicable) have been met. I am aware that there are significant penalties for false certification, including the possibility of fine and imprisonment.

_____ _____

Signature of Type IV Certified Operator or Inspector *Date*

Statement #4: Certification that management practices and vector attraction reduction Options I or J (if chosen) were used — signed by biosolids applier

Plain language: I supervised preparing information that is used to determine if our biosolids program complies with the management practices, site restrictions and VAR requirements of the biosolids rules. Specifically, item _____ *[insert I for injection or J for incorporating within 6 hours of application]* of Minn. R. ch. 7041.1400, subp. 2, was used to meet VAR requirements. In addition, those who gathered and evaluated this information are qualified to do so. I understand that I may be penalized for false certification.

Actual statement from rule: I certify, under *penalty* of law, that the information that will be used to determine compliance with the Management Practices in Minn. R. ch. 7041.1200, the Site Restrictions in Minn. R. ch. 7041.1300, subp. 3, item D, and the VAR requirement in _____ *[insert Minn. R. ch. 7041.1400, subp. 2, I or J, if applicable]* for each site on which bulk biosolids is applied has been prepared under my direction and supervision according to the system designed to ensure that qualified personnel properly gather and evaluate the information used to determine that the management practices and site restrictions have been met. I am aware that there are significant penalties for false certification including the possibility of fine and imprisonment.

_____ 8-15-2012

Signature of Type IV Certified Operator or Inspector *Date*

Management practices were met by: (Check appropriate boxes for compliance descriptions, or if needed, add your own description. *For example, mineland reclamation may not follow all agricultural site practices, such as those for slope.)*

☒ Biosolids were applied on sites approved by the MPCA according to Minn. R. ch. 7041.0800.
☒ Biosolids were applied according to the soil, slope, and separation distance requirements of Minn. R. ch. 7041.1200.

_____

_____

☒ A detailed description of how agronomic rate requirements were met is on page 3 of this Annual Report.
☒ The farmer was notified of the applicable site restrictions for harvesting crops, grazing and public access.

Certification Statements for managing biosolids

Statement #1: Certification that preparer has checked if site has reached cumulative pollutant loading rate

This certification statement is not included on the annual report form. Copies are found in Figure 12 of the Land Application of Biosolids manual (see Minn. R. ch. 7041.1000, subp. 2, item B, for the requirement and 7041.1600, subp. 3, item M, for the certification statement.) Keep these signed certification statements in your records, but you do not need to include them with the annual report.

Statement #2: Certification that a Type IV operator or inspector prepared the annual report

I certify that the attached forms were prepared by myself or under my supervision.

Signature of Type IV Certified Operator or Inspector _____ *Date* _____

Statement #3: Certification that pathogen reduction (for all facilities) and vector attraction reduction Options A through H (if chosen) were used — signed by biosolids preparer

Plain language: I have supervised preparing information that is used to determine if our biosolids program complies with the pathogen reduction and vector attraction reduction (VAR) requirements of the biosolids rules. Specifically, item _____ *[insert one of items A through H — see page 1 of annual report for a list of options]* of Minn. R. ch. 7041.1400, subp. 2, was used to meet VAR requirements. In addition, those who gathered and evaluated this information are qualified to do so. I understand that I may be penalized for false certification.

Actual statement from rule: I certify, under penalty of law, that the information that will be used to determine compliance with the Pathogen Requirements in Minn. R. ch. 7041.1300, subp. 2, or 7041.1300, subp. 3, and the VAR requirement in _____ *[insert one of the vector attraction reduction requirements in Minn. R. ch. 7041.1400, subp. 2, A-H, if one of those requirements is met]* has been prepared under my direction and *supervision* in accordance with the system designed to ensure that qualified personnel properly gather and evaluate the information used to determine that the pathogen requirements (and vector attraction reduction requirements, if applicable) have been met. I am aware that there are significant penalties for false certification, including the possibility of fine and imprisonment.

Signature of Type IV Certified Operator or Inspector _____ *Date* _____

Statement #4: Certification that management practices and vector attraction reduction Options I or J (if chosen) were used — signed by biosolids applier

Plain language: I supervised preparing information that is used to determine if our biosolids program complies with the management practices, site restrictions and VAR requirements of the biosolids rules. Specifically, item __J__ *[insert I for injection or J for incorporating within 6 hours of application]* of Minn. R. ch. 7041.1400, subp. 2, was used to meet VAR requirements. In addition, those who gathered and evaluated this information are qualified to do so. I understand that I may be penalized for false certification.

Actual statement from rule: I certify, under *penalty* of law, that the information that will be used to determine compliance with the Management Practices in Minn. R. ch. 7041.1200, the Site Restrictions in Minn. R. ch. 7041.1300, subp. 3, item D, and the VAR requirement in __J__ *[insert Minn. R. ch. 7041.1400, subp. 2, I or J, if applicable]* for each site on which bulk biosolids is applied has been prepared under my direction and supervision according to the system designed to ensure that qualified personnel properly gather and evaluate the information used to determine that the management practices and site restrictions have been met. I am aware that there are significant penalties for false certification including the possibility of fine and imprisonment.

40-52661913 12/20/2012

Signature of Type IV Certified Operator or Inspector *Date*

Management practices were met by: (Check appropriate boxes for compliance descriptions, or if needed, add your own description. *For example, mineland reclamation may not follow all agricultural site practices, such as those for slope.)*

- ☒ Biosolids were applied on sites approved by the MPCA according to Minn. R. ch. 7041.0800.
- ☒ Biosolids were applied according to the soil, slope, and separation distance requirements of Minn. R. ch. 7041.1200.

_____

_____

- ☒ A detailed description of how agronomic rate requirements were met is on page 3 of this Annual Report. City
- ☒ The farmer was notified of the applicable site restrictions for harvesting crops, grazing and public access. City

APPENDIX F

CITY OF VIRGINIA

327 FIRST STREET SOUTH • VIRGINIA, MINNESOTA 55792-2623

November 24, 1998

Mayor Carolyn Gentilini
City of Virginia
327 1st First Street South
Virginia, Minnesota 55792

Mr. Ted Troolin
St. Louis County Solid Waste Director
307 South First Street
Virginia, Minnesota 55792

Dear Mayor Carolyn Gentilini:

This letter is written to provide you with information about our intent to obtain approval from the Minnesota Pollution Control Agency (MPCA) for the application of biosolids on the Biosolids Disposal Site Authority property located in the SE ¼ of Section 3 T58N R17W. Biosolids are reclaimed through wastewater treatment and are beneficial to crops and soil because of their fertilizer value and organic content. Reports on our land application program are submitted to and reviewed annually by the MPCA.

At this time, we are forwarding this letter and a site application to the MPCA for approval of the site and management practices. Enclosed for your reference is a table of general management practices and conditions which apply to the land application of biosolids.

The site application has been prepared by Mr. Micheal L. Appelwick and Mr. Tim Satrang who are certified by the MPCA as a Type IV operator for the handling of biosolids. They have reviewed the site characteristics and determined acceptable management practices for compliance with the State of Minnesota's rules for the land application of biosolids. If you have questions or want additional information about our program, please contact Mr. Micheal L. Appelwick or Mr. Tim Satrang at (218) 741-4290.

If you have comments or questions about the approval of the site, they should be directed to Ms. Jorja DuFresne of the MPCA Water Quality Division within thirty days of the mailing date of this letter at (612) 296-9292.

The MPCA will approve or deny the utilization of these sites in writing after the thirty-day comment period. You will receive a copy of that letter.

Sincerely,

CITY OF VIRGINIA WASTEWATER TREATMENT PLANT

Micheal L. Appelwick

MLA:mak

Enclosure

cc: Mr. Donald Kleinschmidt, Chairman Biosolids Disposal Authority
Mr. Les Peterson, City of Virginia Biosolids Disposal Authority
Ms. Jorja DuFresne, MPCA St. Paul Office

MPCA GENERAL MANAGEMENT REQUIREMENTS FOR AGRICULTURAL SITES

The following separation distances must be maintained from each of the following features if they exist at the application site for the given application method.

Criteria	Surface Applied	Incorporation within 48 hrs.	Injection
Allowable slopes	0%-6%	0%-12%	0%-12%
Distance to wells			
Private supply	200 ft.	200 ft.	200 ft.
Public supply	1000 ft.	1000 ft.	1000 ft.
Irrigation	50 ft.	25 ft.	25 ft.
Distance to residences[1]	200 ft.	200 ft.	100 ft.
Distance to residential development[1]	600 ft.	600 ft.	300 ft.
Distance to public contact site	600 ft.	600 ft.	300 ft.
Surface Water Features			
Down Gradient[2] Lakes, Rivers, Streams, Type 3,4, and 5 Wetlands, Intermittent Streams[3], Tile Inlets connected to these surface waters, and Sinkholes			
Slope 0%-6%	200 ft.	50 ft.	50 ft.
Slope >6%-12%	not allowed	100 ft.	100 ft.
Grassed Waterways[4]			
Slope 0%-6%	100 ft.	33 ft.	33 ft
Slope 6%-12%	not allowed	33 ft.	33 ft.

[1]Separation distances may be reduced with written permission from all persons responsible for residential developments and places of recreation and all persons inhabiting within the otherwise protected distance.

[2]If downgradient surface water does not receive runoff because the site is bermed, separation distances can be reduced to 33 feet.

[3]For the purpose of this item, intermittent stream means a drainage channel with definable banks that provides for runoff flow to any of the surface waters listed in this item during snow melt or rainfall events.

[4]Separation distances are from the centerline of grassed waterways. For grassed waterways which are wider than these separation distances, application is allowed to the edge of the grass strip. Grassed waterways are natural or constructed, typically broad and shallow, and seeded to grass as protection against erosion.

Frozen or Snow-Covered Ground

During the time the ground is frozen or snow-covered, application of biosolids is allowed only on land with slopes of 0 to 2%. In addition to the slope requirement, application of liquid biosolids is restricted to a maximum rate of 15,000 gallons per acre and the separation distance to Surface Water Features in the table above increases to 600 ft.

Public Access

Access to agricultural application sites by the general public must be controlled for 30 days. The MPCA considers private farm land inaccessible to the general public due to the Minnesota Trepass Law. However, if the site is located in an area where public access is not easily controlled, signs or fences may be necessary to prevent the public from trespassing.

Application Rates

The application rate of biosolids is based on the nitrogen needs of the crop to be grown on the site. All other forms of nitrogen fertilizers that may be applied for the same crop must be taken into account when determining the biosolids application rate. This is done to ensure that excess nitrogen, which could potentially impact our water resources, is not applied.

MPCA BIOSOLIDS SITE APPLICATION FORM

This form must be completed in full or it will be returned. The information requested is required to be sent to the MPCA pursuant to Minn. R. ch. 7041.

Site Information: Complete the following information for each site. Make photocopies of this form if needed.

1. **Site Code:** VA-01

2. **Landowner Name:** Biosolids Disposal
   Address: Site Authority
   327 1st St. S -City Hall
   Virginia, MN 55792

3. **Land Occupier Name:** City of Virginia
   Address: Wastewater Treatment
   327 1st St. South
   Virginia, MN 55792

4. **Legal Description**
   Quarter / Section: SE 1/4 of Sec 3
   Township Coordinate: T 58 N
   Range Coordinate: R 17 W
   Township Name: City of Virginia
   County Name: St. Louis
   Total Approvable Acreage: 85.9

5. Attach a soils map obtained from the Natural Resources Conservation Service (NRCS), or a comparable map prepared by a Soil Scientist. Delineate the following on the map (enlarge if necessary):

   a) Boundaries of each site (approvable acreage)
   b) Locations of any long-term dewatered biosolids storage areas
   c) Location of all tile lines - (transfer tile location data to the soil map)
   d) Location of all tile inlets
   e) Areas which will not be utilized for biosolids applications (identify by coloring or crosshatching) Be sure the map shows the features for which setbacks occur.

6. List all highly permeable soil on the site: [This information is obtained from the NRCS.]

   Disturbed Mineland Soils overburden
   Stockpile - No soil interpretation data
   Available - estimated 50 feet
   to original land surface less than 2% slope

7. **Tile Drainage (Y/N)?** N
   Tile Spacing: N
   Tile Depth: N

8. **Soil Analysis:**

Sampling Date:	6/15/98	6/15/98
Texture (USDA):	Medium (Sandy-Loam)	Medium (Sandy-Clay-Loam)
Organic Matter (%):	2.9	2.9
Extractable Phosphorus (ppm):	92	117
Exchangeable Potassium (ppm):	100	130
pH:	7.2	7.5
Soluble Salts (mmhos/cm):	0.4	0.3

CROPPING AND SITE MANAGEMENT

Complete the information for crop rotations and application rates for each site. Identify crops which will most likely be grown, realistic yield goals, maximum available nitrogen application (MANA) rates and the agronomic rate of biosolids associated with the MANA rate. Provide the analysis used in the calculations in percent: KJELDAHL-N 2.68% NH_3-N 0.20% TOTAL SOLIDS 21.2%

1. Site Code: VA-01

2. Crop Types	Realistic Yield Goal (give units)	MANA Rate (lb/acre)	Agronomic Rate of Biosolids Allowed (Dry Tons/acre)	(Gal.or wet tons/acre)
Timothy	1.0 Ton/Acre	75	6.3	29.7
Alsike				
Brome Grass				
Rye Grass				

3. Circle the months that the site will be utilized for application: 1 2 3 4 5 6 7 8 9 10 11 12

1. Site Code: _____

2. Crop Type	Realistic Yield Goal (give units)	MANA Rate (lb/acre)	Agronomic Rate of Biosolids Allowed (Dry Tons/acre)	(Gal.or wet tons/acre)

3. Circle the months that the site will be utilized for application: 1 2 3 4 5 6 7 8 9 10 11 12

1. Site Code: _____

2. Crop Type	Realistic Yield Goal (give units)	MANA Rate (lb/acre)	Agronomic Rate of Biosolids Allowed (Dry Tons/acre)	(Gal.or wet tons/acre)

3. Circle the months that the site will be utilized for application: 1 2 3 4 5 6 7 8 9 10 11 12

CITY OF GILBERT
SOUTHEAST PART CITY OF VIRGINIA NORTH PART CITY OF EVELETH

T. 58 N.—R. 17 W.

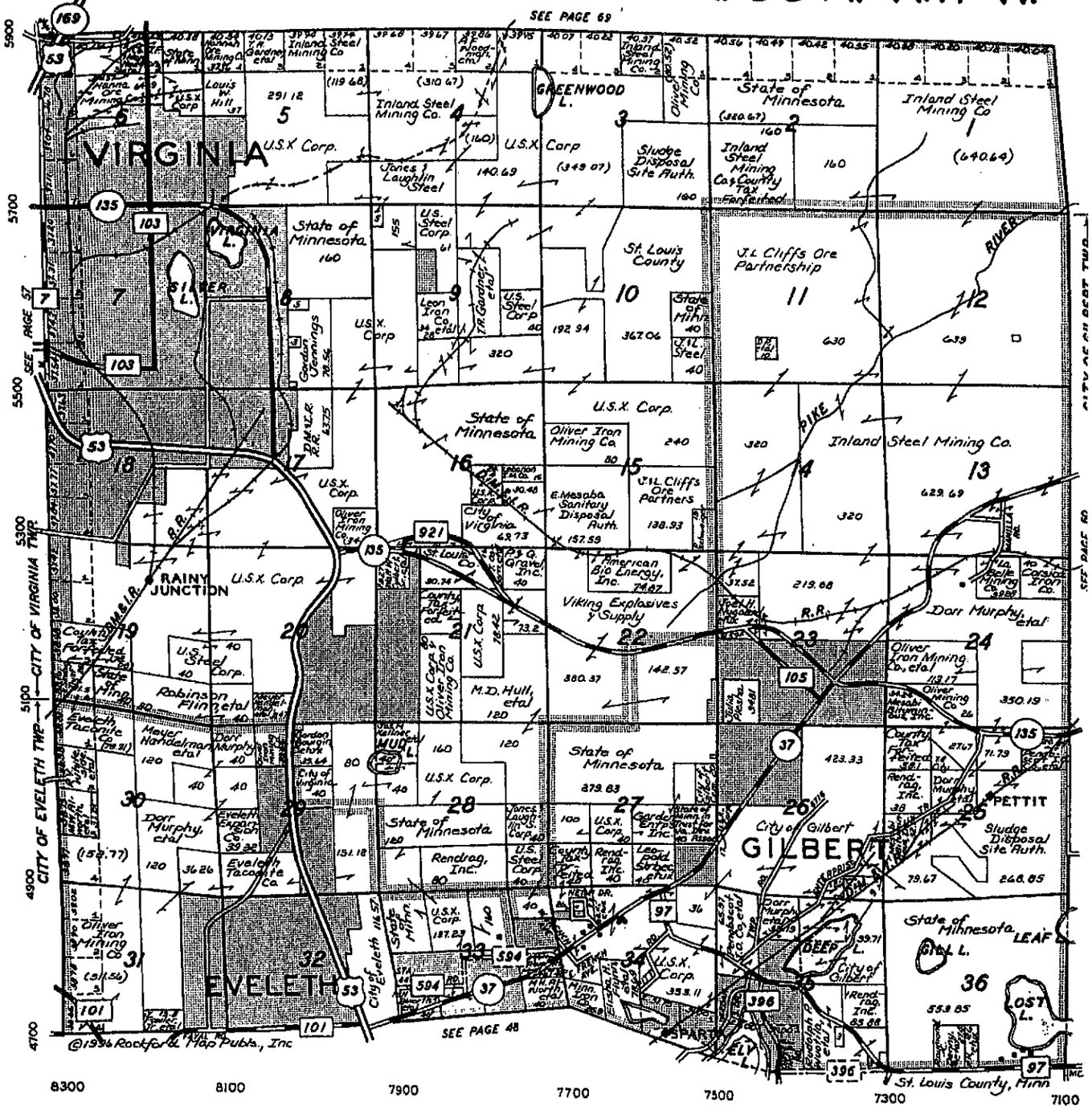

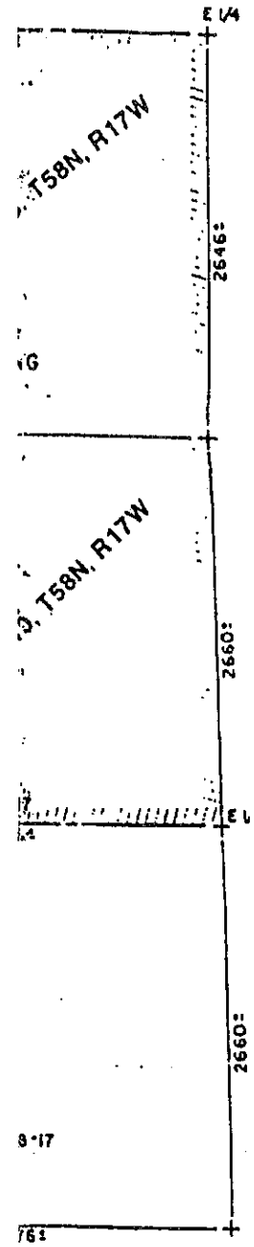

OPERTY

FIRST NATIONAL
Bank of Gilbert
2 North Broadway — Gilbert, Minnesota 55741
(218) 741-7844
FDIC INSURED

, Township 58
1° 00' 00" W
th of the South
or 1209.12 feet;
W for 2798.82
42' 34" W for
South road and

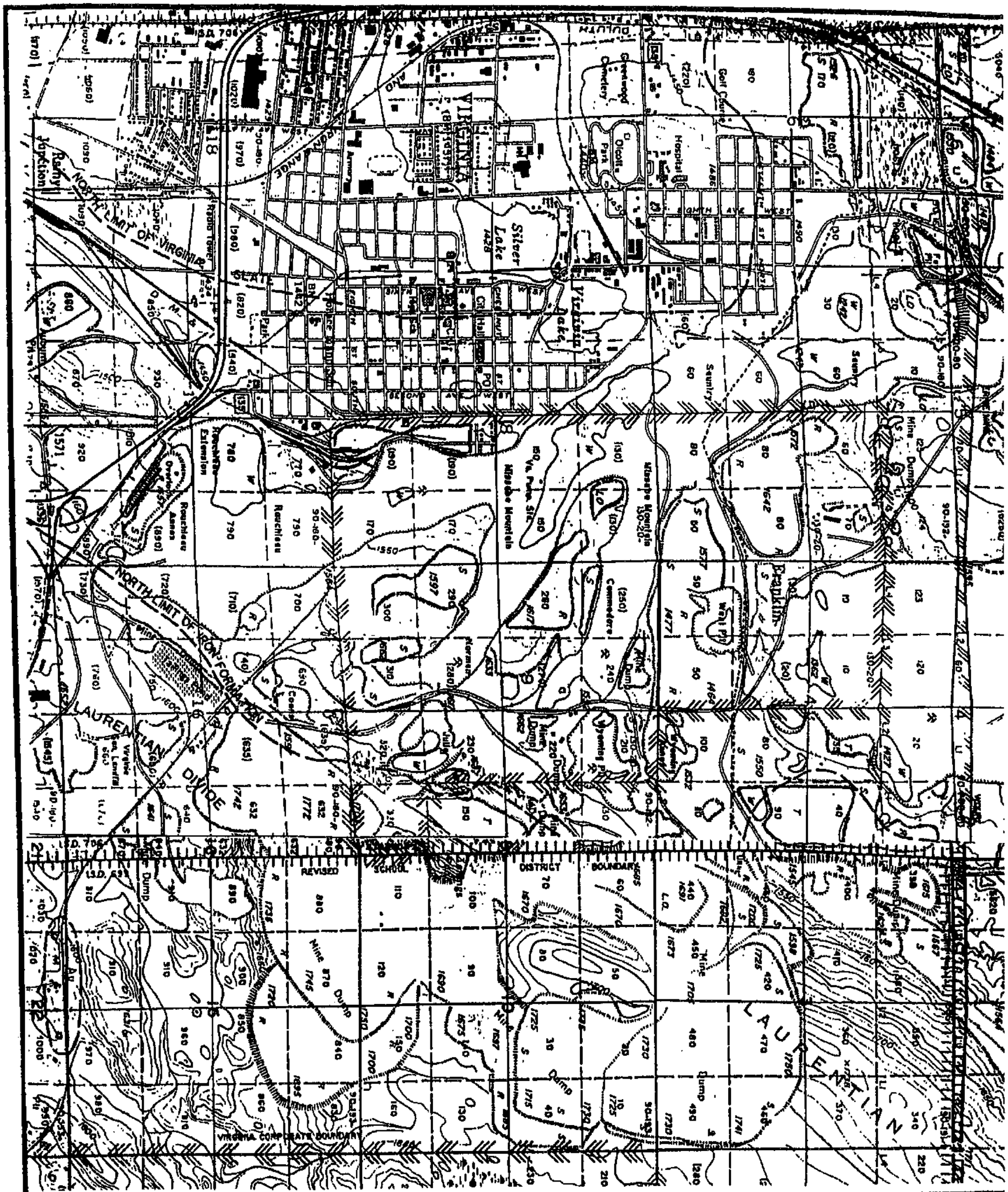

NTS

NORTHEAST TECHNICAL SERVICES, INC.

Virginia Biosolids Site

N ➡

INITIALS	REVISION
DRAWN BY:	
REVIEWED BY:	
JOB #:	FIGURE NUMBER:
DWG FILE:	
SCALE:	

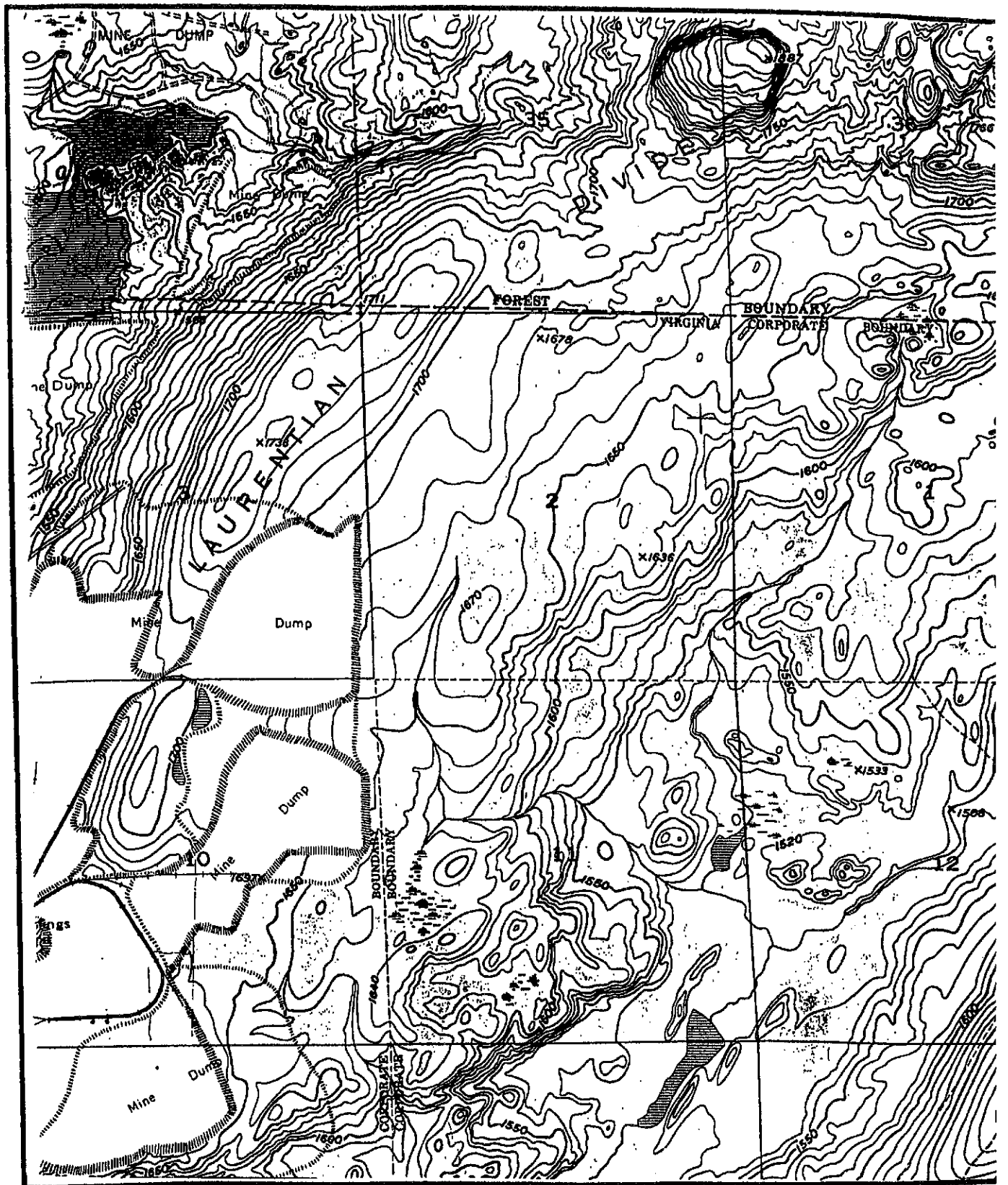

NTS

NORTHEAST TECHNICAL SERVICES, INC.

Virginia Biosolids Site

N

INITIALS	REVISION D
DRAWN BY:	
REVIEWED BY:	
JOB #:	FIGURE NUMBER:
DWG FILE:	
SCALE:	

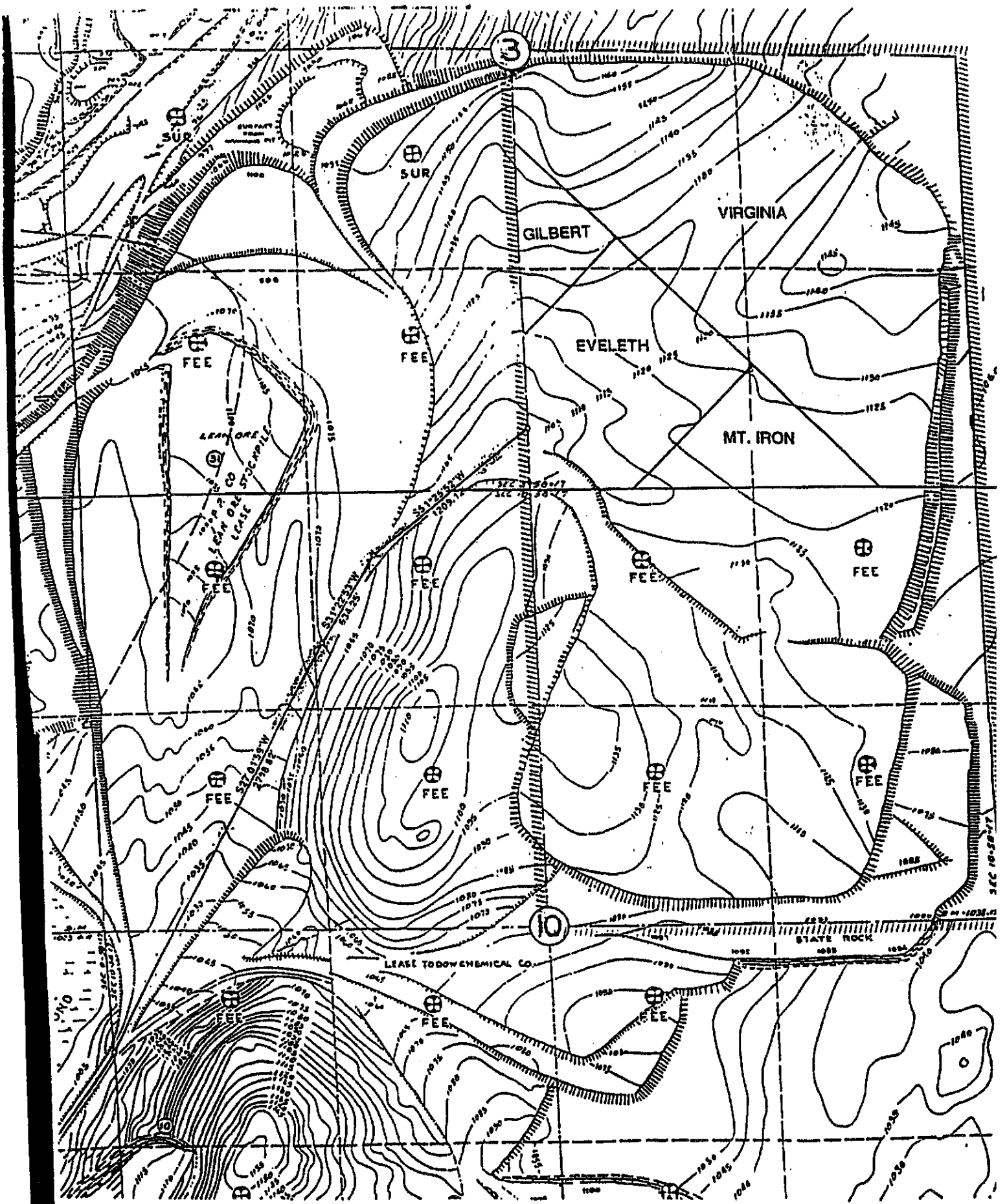

EAST MESABA SANITARY DISPOSAL AUTHORI
SLUDGE DISPOSAL SITE

PLAN FOR DIVISION OF THE AREA ON TOP
OF SURFACE DUMP IN SEC. 3, T58N, R17W.

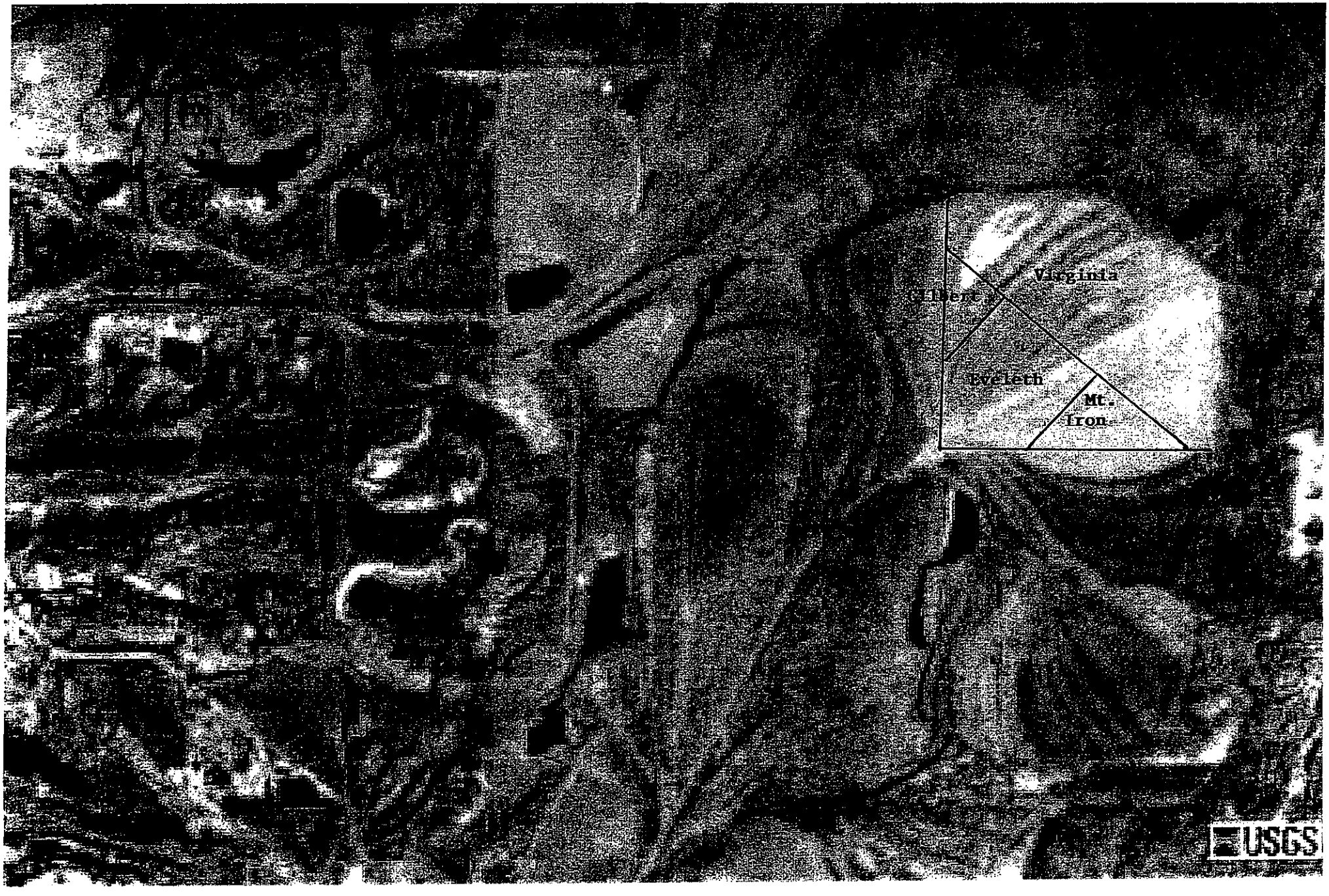

May 14, 1991

MVTL LABORATORIES, Inc.
P.O. BOX 249, 1126 N. FRONT STREET
NEW ULM, MN 56073-0249
PHONE (507) 354-8517 WATS (800) 782-3557 FAX (507) 359-2890

MEMBER ACIL

WE ARE AN EQUAL OPPORTUNITY EMPLOYER

Report To: City of Virginia
City Hall
Virginia, MN 55792

Date: 25 Jun 1998
Work Order: 11-0835
Date Received: 22 Jun 1998

Project: Virginia

Soil Sample Identification	South Field
Laboratory Number	22490

Analyses:

Water pH	7.5
Buffer Index	7.2
Organic Matter %	2.9
Olsen- Phosphorus (ppm)	117
Potassium (ppm)	130

Lime Requirements in lbs/acre of Pure $CaCO_3$ to adjust pH for a 6" depth	(pH 6.5)	None
	(pH 6.0)	None

Sand %	62.5
Silt %	15.0
Clay %	22.5
Texture	Medium (Sandy-Clay-Loam)
Specific Conductance (mmhos/cm)	0.3

cc: Mike Appelwick - NE Tech

MVTL guarantees the accuracy of the analysis done on the sample submitted for testing. It is not possible for MVTL to guarantee that a test result obtained on a particular sample will be the same on any other sample unless all conditions affecting the sample are the same, including sampling by MVTL. As a mutual protection to clients, the public and ourselves, all reports are submitted as the confidential property of clients, and authorization for publication of statements, conclusions or extracts from or regarding our reports is reserved pending our written approval.

MVTL LABORATORIES, Inc.
P.O. BOX 249, 1126 N. FRONT STREET
NEW ULM, MN 56073-0249
PHONE (507) 354-8517 WATS (800) 782-3557 FAX (507) 359-2890

MEMBER ACIL

WE ARE AN EQUAL OPPORTUNITY EMPLOYER

Report To: City of Virginia
City Hall
Virginia, MN 55792

Date: 25 Jun 1998
Work Order: 11-0835
Date Received: 22 Jun 1998

Project: Virginia

Soil Sample Identification	North Field
Laboratory Number	22489

Analyses:

Water pH	7.2
Buffer Index	7.3
Organic Matter %	2.9
Bray-I Phosphorus (ppm)	92
Potassium (ppm)	100

Lime Requirements in lbs/acre of Pure $CaCO_3$ to adjust pH for a 6" depth	(pH 6.5)	None
	(pH 6.0)	None

Sand %	57.5
Silt %	22.5
Clay %	20.0
Texture	Medium (Sandy-Loam)
Specific Conductance (mmhos/cm)	0.4

cc: Mike Appelwick - NE Tech

MVTL guarantees the accuracy of the analysis done on the sample submitted for testing. It is not possible for MVTL to guarantee that a test result obtained on a particular sample will be the same on any other sample unless all conditions affecting the sample are the same, including sampling by MVTL. As a mutual protection to clients, the public and ourselves, all reports are submitted as the confidential property of clients, and authorization for publication of statements, conclusions or extracts from or regarding our reports is reserved pending our written approval.

AMERICAN ENGINEERING TESTING, INC.

SUBSURFACE BORING LOG

AET JOB NO: 91-8022 LOG OF BORING NO. 91-17 (p. 1 of 4)

PROJECT: PROPOSED REGIONAL LANDFILL, ST. LOUIS COUNTY; VIRGINIA, MN

SURFACE ELEVATION: 1118.43'

DEPTH IN FEET	MATERIAL DESCRIPTION	GEOLOGY	BPF	MC	SAMPLE TYPE	REC. IN.	WC	DEN	LL	PL	%-200
1	Tonja This is a Subsurface boring log of the mine stockpile immediately South of the Borehole Representing a general Classification of the Stock Pile. JLP										
2											
3											
4											
5			21	M	SS	16					
6											
7											
8	Miscellaneous Mine Fill - Silty sand with gravel, cobbles and boulders, medium dense to loose, reddish brown to brown	MINE OVERBURDEN FILL									
9											
10			7	M	SS	13					
11											
12											
13											
14											
15			6	M	SS	13					
16											
17											
18											
19											
20			8	M	SS	10					
21											

DEPTH:	DRILLING METHOD
0-79.5'	4.25" HSA
79.5-86.5'	ROTARY, WATER

WATER LEVEL MEASUREMENTS						
DATE	TIME	SAMPLED DEPTH	CASING DEPTH	CAVE-IN DEPTH	DRILLING FLUID LEVEL	WATER LEVEL
11/13/91	3:34	66.5	64.5	61.2		60.7
11/14/91	8:30	71.5	69.5	67.2		59.0

BORING COMPLETED: 11/14/91

CC: CA: Rig:

NOTE: REFER TO THE ATTACHED SHEETS FOR AN EXPLANATION OF TERMINOLOGY ON THIS LOG

4/90

AMERICAN ENGINEERING TESTING, INC.

SUBSURFACE BORING LOG

AET JOB NO: 91-8022

LOG OF BORING NO. 91-17 (p. 2 of 4)

PROJECT: PROPOSED REGIONAL LANDFILL, ST. LOUIS COUNTY; VIRGINIA, MN

DEPTH IN FEET	MATERIAL DESCRIPTION	GEOLOGY	BPF	MC	SAMPLE TYPE	REC. IN.	FIELD & LABORATORY TESTS WC	DEN	LL	PL	%-200
23											
24											
25			9	M	SS	8					
26											
27											
28											
29											
30	Miscellaneous Mine Fill - Silty sand with gravel, cobbles and boulders, with layers of clay, medium dense, brown	MINE OVERBURDEN FILL	12	M	SS	8					
31											
32											
33											
34											
35			27	M	SS	18					
36											
37											
38											
39											
40			14	M	SS	6					
41											
42											
43											
44											
45			18	M	SS	8					
46											
47											

AMERICAN ENGINEERING TESTING, INC.

SUBSURFACE BORING LOG

AET JOB NO: 91-8022 LOG OF BORING NO. 91-17 (p. 3 of 4)

PROJECT: PROPOSED REGIONAL LANDFILL, ST. LOUIS COUNTY; VIRGINIA, MN

DEPTH IN FEET	MATERIAL DESCRIPTION.	GEOLOGY	BPF	MC	SAMPLE TYPE	REC. IN.	FIELD & LABORATORY TESTS WC	DEN	LL	PL	%-200
49											
50			15	M	SS	17					
51											
52											
53											
54	Miscellaneous Mine Fill - Silty sand with gravel, cobbles and boulders, medium dense, reddish brown (SM)	MINE OVERBURDEN FILL									
55			15	M	SS	12					
56											
57											
58											
59											
60			33	M	SS	8					
61											
62											
63											
64											
65	Silt, organic with roots, etc., possibly original topsoil, wet, dense, brown (ML)	POSSIBLE ORIGINAL TOPSOIL	32	W	SS	6					
66											
67											
68											
69											
70	Sand with silt, medium to coarse grained, medium dense, grayish brown (SP-SM)	GLACIAL TILL	33	W	SS	24					
71											
72					3T						
73											

AMERICAN ENGINEERING TESTING, INC.

SUBSURFACE BORING LOG

AET JOB NO: 91-8022

LOG OF BORING NO. 91-17 (p. 4 of 4)

PROJECT: PROPOSED REGIONAL LANDFILL, ST. LOUIS COUNTY; VIRGINIA, MN

DEPTH IN FEET	MATERIAL DESCRIPTION	GEOLOGY	BPF	MC	SAMPLE TYPE	REC. IN.	FIELD & LABORATORY WC	DEN	LL	PL
75	Sand with silt, medium to coarse grained, dense to very dense, grayish brown (SP-SM)	GLACIAL TILL	31	W	SS	14				
76										
77										
78										
79										
80			128	M	SS	24				
81										
82										
83										
84		BEDROCK								
85										
86	END OF BORING									
	Borehole grouted full with neat cement.									

MVTL LABORATORIES, Inc.
P.O. BOX 249, 1126 N. FRONT STREET
NEW ULM, MN 56073-0249
PHONE (507) 354-8517 WATS (800) 782-3557 FAX (507) 359-2890

MEMBER ACIL

WE ARE AN EQUAL OPPORTUNITY EMPLOYER

Report Date: 23 Oct 1998

Lab Number: 98-S5135
Work Order #: 12-7457
Account #: 022020

MIKE APPELWICK
CITY OF VIRGINIA
CITY HALL
VIRGINIA MN 55792

Date Received: 7 Oct 1998
Date Sampled: 6 Oct 1998
Project Number: 81/2051.05

Sample Description: 13924

ANALYTE	RESULT		METHOD	DATE ANALYZED
Solids, Total	* 21.2	%	SM 2540G	8 Oct 1998
Solids, Total Volatile	* 40.4	% of TS	SM 2540G	8 Oct 1998
pH	* 7.0	Units	SW-846 9045	9 Oct 1998
Nitrogen, Kjeldahl	2.68	%	Soil Method 31-3	16 Oct 1998
Nitrogen, Ammonia	0.20	% N	Std Meth 4500NH3E	22 Oct 1998
Nitrate	0.05	% N	Soil Method 33-8	14 Oct 1998
Phosphorus	5.47	% P2O5	AOAC 965.17	15 Oct 1998
Potassium	0.08	% K2O	SW-846 7610	12 Oct 1998
Arsenic	4.00	mg/Kg	SW-846 7060	13 Oct 1998
Cadmium	2.006	mg/Kg	SW-846 7131	21 Oct 1998
Chromium	22.5	mg/Kg	EPA 6010	19 Oct 1998
Copper	347.3	mg/Kg	EPA 6010	19 Oct 1998
Lead	54.2	mg/Kg	EPA 6010	19 Oct 1998
Mercury	0.925	mg/Kg	SW-846 7471	13 Oct 1998
Molybdenum	13.14	mg/Kg	SW-846 7481	19 Oct 1998
Nickel	11.2	mg/Kg	EPA 6010	19 Oct 1998
Selenium	< 0.642	mg/Kg	SW-846 7740	20 Oct 1998
Zinc	570.3	mg/Kg	EPA 6010	19 Oct 1998

Results reported on a dry basis unless otherwise noted
* This result reported on an as received basis.

NOTE: Any "<" reported is analyte specific and is calculated using sample size and % total solids unique to this sample.

Approved by: _____
Michael K. Grob, Laboratory Manager

MVTL guarantees the accuracy of the analysis done on the sample submitted for testing. It is not possible for MVTL to guarantee that a test result obtained on a particular sample will be the same on any other sample unless all conditions affecting the sample are the same, including sampling by MVTL. As a mutual protection to clients, the public and ourselves, all reports are submitted as the confidential property

MVTL LABORATORIES, Inc.
P.O. BOX 249, 1126 N. FRONT STREET
NEW ULM, MN 56073-0249
PHONE (507) 354-8517 WATS (800) 782-3557 FAX (507) 359-2890

MEMBER ACIL

WE ARE AN EQUAL OPPORTUNITY EMPLOYER

Report Date: 13 Oct 1998

Lab Number: 98-S5131
Work Order #: 12-7456
Account #: 022020

MIKE APPELWICK
CITY OF VIRGINIA
CITY HALL
VIRGINIA MN 55792

Date Received: 7 Oct 1998
Date Sampled: 6 Oct 1998

Sample Description: 13925

ANALYTE	RESULT		METHOD	DATE ANALYZED
Solids, Total	* 17.9	%	SM 2540G	8 Oct 1998
Fecal Coliform MPN Sludge	18000	MPN/g-TS	MVTL F20123	7 Oct 1998

Results reported on a dry basis unless otherwise noted
* This result reported on an as received basis.

NOTE: Any "<" reported is analyte specific and is calculated using sample size and % total solids unique to this sample.

Approved by: Michael K. Grob, Laboratory Manager

MVTL guarantees the accuracy of the analysis done on the sample submitted for testing. It is not possible for MVTL to guarantee that a test result obtained on a particular sample will be the same on any other sample unless all conditions affecting the sample are the same, including sampling by MVTL. As a mutual protection to clients, the public and ourselves, all reports are submitted as the confidential property of clients, authorization for publication of statements, conclusions or extracts from or regarding our reports, or any reproduction of the report, is not allowed without our written consent.

MVTL LABORATORIES, Inc.
P.O. BOX 249, 1126 N. FRONT STREET
NEW ULM, MN 56073-0249
PHONE (507) 354-8517 WATS (800) 782-3557 FAX (507) 359-2890

MEMBER ACIL

WE ARE AN EQUAL OPPORTUNITY EMPLOYER

Report Date: 13 Oct 1998

Lab Number: 98-S5132
Work Order #: 12-7456
Account #: 022020

MIKE APPELWICK
CITY OF VIRGINIA
CITY HALL
VIRGINIA MN 55792

Date Received: 7 Oct 1998
Date Sampled: 6 Oct 1998

Sample Description: 13926

ANALYTE	RESULT		METHOD	DATE ANALYZED
Solids, Total	* 18.6 %		SM 2540G	8 Oct 1998
Fecal Coliform MPN Sludge	27000	MPN/g-TS	MVTL F20123	7 Oct 1998

Results reported on a dry basis unless otherwise noted
* This result reported on an as received basis.

NOTE: Any "<" reported is analyte specific and is calculated using sample size and % total solids unique to this sample.

Approved by: Michael K. Grob, Laboratory Manager

MVTL guarantees the accuracy of the analysis done on the sample submitted for testing. It is not possible for MVTL to guarantee that a test result obtained on a particular sample will be the same on any other sample unless all conditions affecting the sample are the same, including sampling by MVTL. As a mutual protection to clients, the public and ourselves, all reports are submitted as the confidential property

MVTL LABORATORIES, Inc.
P.O. BOX 249, 1126 N. FRONT STREET
NEW ULM, MN 56073-0249
PHONE (507) 354-8517 WATS (800) 782-3557 FAX (507) 359-2890

MEMBER ACIL

WE ARE AN EQUAL OPPORTUNITY EMPLOYER

Report Date: 13 Oct 1998

Lab Number: 98-S5133
Work Order #: 12-7456
Account #: 022020

MIKE APPELWICK
CITY OF VIRGINIA
CITY HALL
VIRGINIA MN 55792

Date Received: 7 Oct 1998
Date Sampled: 6 Oct 1998

Sample Description: 13927

ANALYTE	RESULT		METHOD	DATE ANALYZED
Solids, Total	* 18.6 %		SM 2540G	8 Oct 1998
Fecal Coliform MPN Sludge	10000	MPN/g-TS	MVTL F20123	7 Oct 1998

Results reported on a dry basis unless otherwise noted
* This result reported on an as received basis.

NOTE: Any "<" reported is analyte specific and is calculated using sample size and % total solids unique to this sample.

Approved by: _____
Michael K. Grob, Laboratory Manager

MVTL guarantees the accuracy of the analysis done on the sample submitted for testing. It is not possible for MVTL to guarantee that a test result obtained on a particular sample will be the same on any other sample unless all conditions affecting the sample are the same, including sampling by MVTL. As a mutual protection to clients, the public and ourselves, all reports are submitted as the confidential property

MVTL LABORATORIES, Inc.
P.O. BOX 249, 1126 N. FRONT STREET
NEW ULM, MN 56073-0249
PHONE (507) 354-8517 WATS (800) 782-3557 FAX (507) 359-2890

MEMBER ACIL

WE ARE AN EQUAL OPPORTUNITY EMPLOYER

Report Date: 13 Oct 1998

Lab Number: 98-S5134
Work Order #: 12-7456
Account #: 022020

MIKE APPELWICK
CITY OF VIRGINIA
CITY HALL
VIRGINIA MN 55792

Date Received: 7 Oct 1998
Date Sampled: 6 Oct 1998

Sample Description: 13928

ANALYTE	RESULT		METHOD	DATE ANALYZED
Solids, Total	* 18.5	%	SM 2540G	8 Oct 1998
Fecal Coliform MPN Sludge	17000	MPN/g-TS	MVTL F20123	7 Oct 1998

Results reported on a dry basis unless otherwise noted
* This result reported on an as received basis.

NOTE: Any "<" reported is analyte specific and is calculated using sample size and % total solids unique to this sample.

Approved by: Michael K. Grob, Laboratory Manager

MVTL guarantees the accuracy of the analysis done on the sample submitted for testing. It is not possible for MVTL to guarantee that a test result obtained on a particular sample will be the same on any other sample unless all conditions affecting the sample are the same, including sampling by MVTL. As a mutual protection to clients, the public and ourselves, all ...

MVTL LABORATORIES, Inc.
P.O. BOX 249, 1126 N. FRONT STREET
NEW ULM, MN 56073-0249
PHONE (507) 354-8517 WATS (800) 782-3557 FAX (507) 359-2890

MEMBER ACIL

WE ARE AN EQUAL OPPORTUNITY EMPLOYER

Report Date: 26 Oct 1998

Lab Number: 98-S5287
Work Order #: 12-7701
Account #: 022020

MIKE APPELWICK
CITY OF VIRGINIA
CITY HALL
VIRGINIA MN 55792

Date Received: 15 Oct 1998
Date Sampled: 14 Oct 1998

Sample Description: 14501 #1 BIOSOLID

ANALYTE	RESULT		METHOD	DATE ANALYZED
Solids, Total	* 18.8	%	SM 2540G	19 Oct 1998
Fecal Coliform MPN Sludge	74000	MPN/g-TS	MVTL F20123	15 Oct 1998

Results reported on a dry basis unless otherwise noted
* This result reported on an as received basis.

NOTE: Any "<" reported is analyte specific and is calculated using sample size and % total solids unique to this sample.

Approved by: _____
Michael K. Grob, Laboratory Manager

MVTL guarantees the accuracy of the analysis done on the sample submitted for testing. It is not possible for MVTL to guarantee that a test result obtained on a particular sample will be the same on any other sample unless all conditions affecting the sample are the same, including sampling by MVTL. As a mutual protection to clients, the public and ourselves, all reports are submitted for the use of the client to whom addressed.

MVTL LABORATORIES, Inc.
P.O. BOX 249, 1126 N. FRONT STREET
NEW ULM, MN 56073-0249
PHONE (507) 354-8517 WATS (800) 782-3557 FAX (507) 359-2890

MEMBER ACIL

WE ARE AN EQUAL OPPORTUNITY EMPLOYER

Report Date: 26 Oct 1998

Lab Number: 98-S5288
Work Order #: 12-7701
Account #: 022020

MIKE APPELWICK
CITY OF VIRGINIA
CITY HALL
VIRGINIA MN 55792

Date Received: 15 Oct 1998
Date Sampled: 14 Oct 1998

Sample Description: 14502 #2 BIOSOLID

ANALYTE	RESULT		METHOD	DATE ANALYZED
Solids, Total	* 19.3 %		SM 2540G	19 Oct 1998
Fecal Coliform MPN Sludge	26000	MPN/g-TS	MVTL F20123	15 Oct 1998

Results reported on a dry basis unless otherwise noted
* This result reported on an as received basis.

NOTE: Any "<" reported is analyte specific and is calculated using sample size and % total solids unique to this sample.

Approved by: _____
Michael K. Grob, Laboratory Manager

MVTL guarantees the accuracy of the analysis done on the sample submitted for testing. It is not possible for MVTL to guarantee that a test result obtained on a particular sample will be the same on any other sample unless all conditions affecting the sample are the same, including sampling by MVTL. As a mutual protection to clients, the public and ourselves, all reports are submitted as the confidential property

MVTL LABORATORIES, Inc.
P.O. BOX 249, 1126 N. FRONT STREET
NEW ULM, MN 56073-0249
PHONE (507) 354-8517 WATS (800) 782-3557 FAX (507) 359-2890

MEMBER ACIL

WE ARE AN EQUAL OPPORTUNITY EMPLOYER

Report Date: 26 Oct 1998

Lab Number: 98-S5289
Work Order #: 12-7701
Account #: 022020

MIKE APPELWICK
CITY OF VIRGINIA
CITY HALL
VIRGINIA MN 55792

Date Received: 15 Oct 1998
Date Sampled: 14 Oct 1998

Sample Description: 14503 #3 BIOSOLID

ANALYTE	RESULT		METHOD	DATE ANALYZED
Solids, Total	* 19.5 %		SM 2540G	19 Oct 1998
Fecal Coliform MPN Sludge	36000	MPN/g-TS	MVTL F20123	15 Oct 1998

Results reported on a dry basis unless otherwise noted
* This result reported on an as received basis.

NOTE: Any "<" reported is analyte specific and is calculated using sample size and % total solids unique to this sample.

Approved by: Michael K. Grob, Laboratory Manager

MVTL guarantees the accuracy of the analysis done on the sample submitted for testing. It is not possible for MVTL to guarantee that a test result obtained on a particular sample will be the same on any other sample unless all conditions affecting the sample are the same, including sampling by MVTL.

Environmental Consultants, Project Managers & Support Services

December 28, 2012

Ms. Jorja A. DuFresne
Minnesota Pollution Control Agency
520 Lafayette Road North
St. Paul, Mn. 55155-4194

Re: City of Virginia – NPDES/SDS Permit #MN0030163
2012 Biosolids Annual Report

Please find enclosed Virginia Wastewater Treatment Plant, Biosolids Annual Report for the past crop year, September 1, 2011 through August 31, 2012. Biosolids were land applied in October 2011 and June 2012. Biosolids were also transferred during the crop year from Virginia to the Grand Rapids Wastewater Treatment Plant. The City of Gilbert transferred lime stabilized Biosolids to land spreading on the Virginia/Great Scott (VA-GS-01N) site for land application. The site specific land application and transfer information is included in the annual report. The land applications did not exceed applicable limits for nitrogen or metals.

If you should have any questions regarding this report, please feel free to contact me at (218) 780-5672 or e-mail: mappelwick@netechnical.com.

Sincerely,
Northeast Technical Services, Inc.

Micheal L. Appelwick
Executive Vice President/Principal

MLA: rjd

CC: Mayor Louis Russo – City of Virginia

526 CHESTNUT STREET • P.O. BOX 1142 • VIRGINIA, MINNESOTA 55792 • 218-741-4290 • FAX 218-741-4291
www.netechnical.com

Equal Opportunity Employer

Minnesota Pollution Control Agency
520 Lafayette Road North
St. Paul, MN 55155-4194

Biosolids Annual Report

Minnesota's Biosolids Program
Figure 11

The yearly completion and submittal of this form, including the certification statements, will fulfill the requirements of Minn. R. Chapter 7041 for annual reporting of biosolids landspreading activities. This form must be submitted to the Minnesota Pollution Control Agency (MPCA) at the address above **by December 31 following the cropping year.** *When bulk biosolids are applied, this form must be prepared by, or under the supervision of, a Type IV certified operator or inspector.*

Reporting period: September 1, 2011 **through August 31,** 2012

Facility Information

Facility name: Virginia Wastewater Treatment Plant
NPDES or SDS Permit number: MN0030163
Contact person: Micheal L. Appelwick
Phone number: 218-741-4290
Work address: PO Box 1142, Virginia, Mn. 55792

Check here if biosolids were not land applied during this cropping year: ☐

Total quantity of biosolids land applied as bulk material: _____ Gallons or _____ Wet tons and 495 Dry tons

Total quantity of Class A biosolids sold or given away in bags or other containers: NA Dry tons

Total quantity of biosolids transferred to another facility: _____ Dry tons or 363,800 Gallons

Transferred to what facility: Grand Rapids Contact person/phone # of facility: Jim Ackerman / 218-326-7195

(Gilbert transfer = 7.35 Dry tons included in VA-GS-01N Total)

Reporting of Biosolids Information

Pathogen reduction

Select the option/s used to meet pathogen reduction requirements:

Class B Options:

1. ☒ Geometric mean of fecal coliform determined
2. Process to Significantly Reduce Pathogens (PSRP) monitored:
   ☐ Aerobic ☒ Anaerobic ☐ Air dry ☐ Compost ☐ Lime
3. ☐ Process determined equivalent to a PSRP process monitored

Class A Options: (1 - 6 listed under 7041.1300, subp. 2, C)

☐ 1 ☐ 2 ☐ 3 ☐ 4 ☐ 5 ☐ 6

Describe how the Class A or Class B pathogen reduction requirement is met. For example, indicate what information was used and how it was evaluated to determine compliance. **(Do not submit daily data.)**

(3-1) Geometric mean
10/3/11-849 MPN/g-TS (stockpile)
5/17/12-716 MPN/g-TS (stockpile)
5/23/12-520 MPN/g-TS (stockpile)
7/26/12-747MPN/g-TS (stockpile)

Vector attraction reductions

Select the option/s by which vector attraction reduction was met: (For a detailed description of these options, see your Biosolids Manual or Minn. R. Chapter 7041.1400, subp. 2)

☐ A. 38% Volatile Solids Reduction (VSR)
☒ B. Bench Scale - Anaerobically Digested
☐ C. Bench Scale - Aerobically Digested
☐ D. SOUR Test: ≤ 1.5 mg oxygen/hour at 20 C
☐ E. Composted (aerobic/high temperature)
☐ F. Lime or Alkaline Stabilization
☐ G. Dried to 75% - for Stabilized Solids
☐ H. Dried to 90% - for Unstabilized Solids
☐ I. Injected
☐ J. Incorporated within six hours of application

For options A through H only, describe how the option was met. If VSR is calculated, indicate which equation was used, i.e. Van Kleek.

40 Day Anaerobic Digestion Bench Scale
10.2% reduction-12/1/11
7.3% reduction-3/15/12
13.6% reduction-7/12/12
9.4% reduction-1/31/12

Biosolids Analysis

	Sample # 1	Sample # 2	Sample # 3	Sample # 4	Sample # 5 Not included in average	Sample #	Average
Date/s of Sampling	10/3/11	3/13/12	5/17/12	9/26/12	04/03/12		
Date Sent to Lab	10/3/11	3/13/12	5/17/12	9/26/12	04/05/12		
Total Solids (%)	33.6	5.5	33.4	23.8	2.80		24.1
Total Volatile Solids (%)	29.3	33.9	29.0	34.3	0.54		31.6
Kjeldahl Nitrogen (%)	1.84	3.03	1.72	2.58	4.01		9.17
Ammonia Nitrogen (%)	0.300	1.10	0.388	0.480	1.03		2.86
Phosphorus (%)	1.93	2.68	1.92	1.95	2.10		2.12
Potassium (%)	0.07	0.17	0.07	0.11	2480		0.11
pH	8.0	7.5	7.9	8.2	7.2		7.9
Arsenic (mg/kg)	2.7	3.0	<2.9	<1.0	12.2		1.15
Cadmium (mg/kg)	0.9	1.2	0.29	0.40	1.7		0.70
Copper (mg/kg)	468	482	522	208	465		420
Lead (mg/kg)	22.5	29.9	19.4	10.5	42.3		20.6
Mercury (mg/kg)	0.62	0.55	0.96	1.1	1.4		0.81
Molybdenum (mg/kg)	11.0	11.1	>14.4	5.9	>14.7		10.6
Nickel (mg/kg)	10.6	12.1	12.2	5.3	21.3		10.1
Selenium (mg/kg)	1.3	2.9	<1.4	<1.0	6.6		1.65
Zinc (mg/kg)	399	418	420	207	1570		386

Parameter	Concentration (mg/kg)
Arsenic	38
Cadmium	43
Copper	2150
Lead	420
Mercury	28
Molybdenum	38
Nickel	210
Selenium	50
Zinc	3750

Greater sampling frequency

Compare your average biosolids values with those in the table on the left. List any parameters that have average values greater than the values in the table.

None _____ _____ _____

_____ _____ _____ _____

These parameters must be analyzed two times their minimum sampling frequency during **next year's cropping season**. Your minimum sampling frequency depends on the quantity of biosolids land applied.

Your minimum biosolids sampling frequency = 4X

Two times minimum biosolids sampling frequency = _____

Site Specific Information

Site Code (each site follows column down):	VA-01S	RM-01(E)	RM-01(W)
Landowner:	Biosolid Site Auth	Robert Mayry	Robert Mayry
Actual Acreage Receiving Biosolids:	30	6.5	9.5
Crop Grown This Year:	Mixed grass	Alfalfa	Alfalfa
Realistic Yield Goal (yield /acre):	2 tons	3 tons	3 tons
Crop Grown Previous Year:	Mixed grass	Alfalfa	Alfalfa
Soil Organic Matter*:	1.8	3.6	3.6
MANA Rate (lbs./acre):	75	90	90
Which Months Biosolids Were Land Applied:	Oct	Oct	Oct

*Use last soil test taken for organic matter content. Soil testing is required once in the three-year time period prior to land application unless stipulated otherwise in a permit or site approval letter. If soil tests were required to be taken for this reporting year, complete the following:

Soil Test Date Sampled:	7/29/09	9/7/11	9/7/11
Texture:	Coarse	Medium	Medium
Organic Matter:	1.8	3.6	3.6
Phosphorus:	44	11	11
Potassium:	42	49	49
pH:	7.5	7.4	7.4
Soluble Salts:	0.2	0.2 *8/15/07	0.2 *8/15/07

Application rates and methods:

Sample # or average used in following calculations:	1	1	1
Gallons or wet tons applied **per acre** this year:	22	28	28
Dry tons applied **per acre** this year:	6.9	8.7	8.7
Method: Surface/Inject/Incorporate (0 to 48 hrs.):	Surface	Surface	Surface
Nitrogen applied *(pounds/acre)*			
Available nitrogen applied in biosolids this year:	63.2	79.7	79.7
Carry-over nitrogen from 1 year ago:	0	0	0
Carry-over nitrogen from 2 years ago:	0	0	0
Nitrogen applied from other sources:	0	0	0
Total nitrogen applied:	**63.2**	**79.7**	**79.7**
	(TS - 31.6%)	(TS - 31.6%)	(TS - 31.6%)

Metals applied this year and cumulative *(pounds/acre)*

Concentration (mg/kg) X .002 X Dry tons/acre = pounds/acre of metal.
For cumulative metals, add all past metal loadings together.

Parameter	This Year	Cumulative	This Year	Cumulative	This Year	Cumulative
Arsenic	0.037	0.360	0.050	0.270	0.050	0.128
Cadmium	0.012	0.678	0.783	0.870	0.783	0.8150.04
Copper	6.458	69.991	8.140	6.927	8.140	23.526
Lead	0.311	12.899	0.392	2.256	0.392	1.392
Mercury	0.009	0.076	0.011	0.024	0.011	0.035
Molybdenum	0.152	1.020	0.191	0.788	0.191	0.364
Nickel	0.146	3.069	0.184	1.088	0.184	0.439
Selenium	0.018	0.184	0.023	0.293	0.023	0.120
Zinc	5.506	79.786	6.943	36.184	6.943	20.846

Site Specific Information

Site Code (each site follows column down):	VA-UT-01	Gilbert Biosolids Transfer VA-GS-01N	
Landowner:	United Taconite LLC	Biosolids Site Auth	
Actual Acreage Receiving Biosolids:	15	5.9	
Crop Grown This Year:	grass/hay	grass/hay	
Realistic Yield Goal (yield /acre):	5.8T	2.0	
Crop Grown Previous Year:	grass/hay	grass/hay	
Soil Organic Matter*:	0.6	2.9	
MANA Rate (lbs./acre):	100/200	50	
Which Months Biosolids Were Land Applied:	June	June	

*Use last soil test taken for organic matter content. Soil testing is required once in the three-year time period prior to land application unless stipulated otherwise in a permit or site approval letter. If soil tests were required to be taken for this reporting year, complete the following:

Soil Test Date Sampled:	8/17/11	10/1/10	
Texture:	ccoarse	sandy loam	
Organic Matter:	0.6	2.9	
Phosphorus:	2	81	
Potassium:	532	93	
pH:	8.2	7.6	
Soluble Salts:	0.4	0.3	

Application rates and methods:

Sample # or average used in following calculations:	3	5	
Gallons or wet tons applied per acre this year:	35.4 wet tons	10,114 gallons	
Dry tons applied per acre this year:	8.9	1.24	
Method: Surface/Inject/Incorporate (0 to 48 hrs.):	surface	surface	
Nitrogen applied *(pounds/acre)*			
Available nitrogen applied in biosolids this year:	81.9	27.2	
Carry-over nitrogen from 1 year ago:	23.8	4.0	
Carry-over nitrogen from 2 years ago:	0	0	
Nitrogen applied from other sources:	0	0	
Total nitrogen applied:	**105.7**	**31.2**	
	(TS - 25%)	(TS - 3.0%)	

Metals applied this year and cumulative *(pounds/acre)*

Concentration (mg/kg) X .002 X Dry tons/acre = pounds/acre of metal.
For cumulative metals, add all past metal loadings together.

Parameter	This Year	Cumulative	This Year	Cumulative	This Year	Cumulative
Arsenic	0.052	0.322	0.030	0.128		
Cadmium	0.005	0.446	0.004	0.048		
Copper	9.292	16.680	1.153	14.914		
Lead	0.345	1.713	0.105	1.205		
Mercury	0.017	0.044	0.003	0.056		
Molybdenum	0.256	0.915	0.036	0.458		
Nickel	0.217	1.149	0.053	0.512		
Selenium	0.025	0.301	0.016	0.102		
Zinc	7.476	44.849	3.894	18.593		

Certification Statements for managing biosolids

Statement #1: Certification that preparer has checked if site has reached cumulative pollutant loading rate

This certification statement is not included on the annual report form. Copies are found in Figure 12 of the Land Application of Biosolids manual (see Minn. R. ch. 7041.1000, subp. 2, item B, for the requirement and 7041.1600, subp. 3, item M, for the certification statement.) Keep these signed certification statements in your records, but you do not need to include them with the annual report.

Statement #2: Certification that a Type IV operator or inspector prepared the annual report

I certify that the attached forms were prepared by myself or under my supervision.

Signature of Type IV Certified Operator or Inspector — *Date* 12/28/2012

Statement #3: Certification that pathogen reduction (for all facilities) and vector attraction reduction Options A through H (if chosen) were used — signed by biosolids preparer

Plain language: I have supervised preparing information that is used to determine if our biosolids program complies with the pathogen reduction and vector attraction reduction (VAR) requirements of the biosolids rules. Specifically, Item B *[insert one of items A through H — see page 1 of annual report for a list of options]* of Minn. R. ch. 7041.1400, subp. 2, was used to meet VAR requirements. In addition, those who gathered and evaluated this information are qualified to do so. I understand that I may be penalized for false certification.

Actual statement from rule: I certify, under penalty of law, that the information that will be used to determine compliance with the Pathogen Requirements in Minn. R. ch. 7041.1300, subp. 2, or 7041.1300, subp. 3, and the VAR requirement in _____ *[insert one of the vector attraction reduction requirements in Minn. R. ch. 7041.1400, subp. 2, A-H, if one of those requirements is met]* has been prepared under my direction and *supervision* in accordance with the system designed to ensure that qualified personnel properly gather and evaluate the information used to determine that the pathogen requirements (and vector attraction reduction requirements, if applicable) have been met. I am aware that there are significant penalties for false certification, including the possibility of fine and imprisonment.

Signature of Type IV Certified Operator or Inspector — *Date* 12/28/2012

Statement #4: Certification that management practices and vector attraction reduction Options I or J (if chosen) were used — signed by biosolids applier

Plain language: I supervised preparing information that is used to determine if our biosolids program complies with the management practices, site restrictions and VAR requirements of the biosolids rules. Specifically, Item _____ *[insert I for injection or J for incorporating within 6 hours of application]* of Minn. R. ch. 7041.1400, subp. 2, was used to meet VAR requirements. In addition, those who gathered and evaluated this information are qualified to do so. I understand that I may be penalized for false certification.

Actual statement from rule: I certify, under *penalty* of law, that the information that will be used to determine compliance with the Management Practices in Minn. R. ch. 7041.1200, the Site Restrictions in Minn. R. ch. 7041.1300, subp. 3, item D, and the VAR requirement in J *[insert Minn. R. ch. 7041.1400, subp. 2, I or J, if applicable]* for each site on which bulk biosolids is applied has been prepared under my direction and supervision according to the system designed to ensure that qualified personnel properly gather and evaluate the information used to determine that the management practices and site restrictions have been met. I am aware that there are significant penalties for false certification including the possibility of fine and imprisonment.

Signature of Type IV Certified Operator or Inspector — *Date* 12/28/2012

Management practices were met by: (Check appropriate boxes for compliance descriptions, or if needed, add your own description. *For example, mineland reclamation may not follow all agricultural site practices, such as those for slope.)*

- ☒ Biosolids were applied on sites approved by the MPCA according to Minn. R. ch. 7041.0800.
- ☒ Biosolids were applied according to the soil, slope, and separation distance requirements of Minn. R. ch. 7041.1200.

_____

_____

- ☒ A detailed description of how agronomic rate requirements were met is on page 3 of this Annual Report.
- ☒ The farmer was notified of the applicable site restrictions for harvesting crops, grazing and public access.

Signature of Type IV Certified Operator or Inspector *Date*

Statement #4: Certification that management practices and vector attraction reduction Options I or J (if chosen) were used — signed by biosolids applier

Plain language: I supervised preparing information that is used to determine if our biosolids program complies with the management practices, site restrictions and VAR requirements of the biosolids rules. Specifically, item _____ *[insert I for injection or J for incorporating within 6 hours of application]* of Minn. R. ch. 7041.1400, subp. 2, was used to meet VAR requirements. In addition, those who gathered and evaluated this information are qualified to do so. I understand that I may be penalized for false certification.

Actual statement from rule: I certify, under *penalty* of law, that the information that will be used to determine compliance with the Management Practices in Minn. R. ch. 7041.1200, the Site Restrictions in Minn. R. ch. 7041.1300, subp. 3, item D, and the VAR requirement in _____ *[insert Minn. R. ch. 7041.1400, subp. 2, I or J, if applicable]* for each site on which bulk biosolids is applied has been prepared under my direction and supervision according to the system designed to ensure that qualified personnel properly gather and evaluate the information used to determine that the management practices and site restrictions have been met. I am aware that there are significant penalties for false certification including the possibility of fine and imprisonment.

Signature of Type IV Certified Operator or Inspector 8-15-2012 *Date*

Management practices were met by: (Check appropriate boxes for compliance descriptions, or if needed, add your own description) *For example, mineland reclamation may not follow all agricultural site practices, such as those for slope.)*

☒ Biosolids were applied on sites approved by the MPCA according to Minn. R. ch. 7041.0800.
☒ Biosolids were applied according to the soil, slope, and separation distance requirements of Minn. R. ch. 7041.1200.

[redacted]

☒ The farmer was notified of the applicable site restrictions for harvesting crops, grazing and public access.

Certification Statements for managing biosolids

Statement #1: Certification that preparer has checked if site has reached cumulative pollutant loading rate

This certification statement is not included on the annual report form. Copies are found in Figure 12 of the Land Application of Biosolids manual (see Minn. R. ch. 7041.1000, subp. 2, item B, for the requirement and 7041.1600, subp. 3, item M, for the certification statement.) Keep these signed certification statements in your records, but you do not need to include them with the annual report.

Statement #2: Certification that a Type IV operator or inspector prepared the annual report

I certify that the attached forms were prepared by myself or under my supervision.

_____ _____

Signature of Type IV Certified Operator or Inspector *Date*

Statement #3: Certification that pathogen reduction (for all facilities) and vector attraction reduction Options A through H (if chosen) were used — signed by biosolids preparer

Plain language: I have supervised preparing information that is used to determine if our biosolids program complies with the pathogen reduction and vector attraction reduction (VAR) requirements of the biosolids rules. Specifically, item _____ *[insert one of items A through H — see page 1 of annual report for a list of options]* of Minn. R. ch. 7041.1400, subp. 2, was used to meet VAR requirements. In addition, those who gathered and evaluated this information are qualified to do so. I understand that I may be penalized for false certification.

Actual statement from rule: I certify, under penalty of law, that the information that will be used to determine compliance with the Pathogen Requirements in Minn. R. ch. 7041.1300, subp. 2, or 7041.1300, subp. 3, and the VAR requirement in _____ *[insert one of the vector attraction reduction requirements in Minn. R. ch. 7041.1400, subp. 2, A-H, if one of those requirements is met]* has been prepared under my direction and *supervision* in accordance with the system designed to ensure that qualified personnel properly gather and evaluate the information used to determine that the pathogen requirements (and vector attraction reduction requirements, if applicable) have been met. I am aware that there are significant penalties for false certification, including the possibility of fine and imprisonment.

_____ _____

Signature of Type IV Certified Operator or Inspector *Date*

Statement #4: Certification that management practices and vector attraction reduction Options I or J (if chosen) were used — signed by biosolids applier

Plain language: I supervised preparing information that is used to determine if our biosolids program complies with the management practices, site restrictions and VAR requirements of the biosolids rules. Specifically, item __J__ *[insert I for injection or J for incorporating within 6 hours of application]* of Minn. R. ch. 7041.1400, subp. 2, was used to meet VAR requirements. In addition, those who gathered and evaluated this information are qualified to do so. I understand that I may be penalized for false certification.

Actual statement from rule: I certify, under *penalty* of law, that the information that will be used to determine compliance with the Management Practices in Minn. R. ch. 7041.1200, the Site Restrictions in Minn. R. ch. 7041.1300, subp. 3, item D, and the VAR requirement in __J__ *[insert Minn. R. ch. 7041.1400, subp. 2, I or J, if applicable]* for each site on which bulk biosolids is applied has been prepared under my direction and supervision according to the system designed to ensure that qualified personnel properly gather and evaluate the information used to determine that the management practices and site restrictions have been met. I am aware that there are significant penalties for false certification including the possibility of fine and imprisonment.

40-52661913 12/20/2012

Signature of Type IV Certified Operator or Inspector *Date*

Management practices were met by: (Check appropriate boxes for compliance descriptions, or if needed, add your own description. *For example, mineland reclamation may not follow all agricultural site practices, such as those for slope.)*

- [x] Biosolids were applied on sites approved by the MPCA according to Minn. R. ch. 7041.0800.
- [x] Biosolids were applied according to the soil, slope, and separation distance requirements of Minn. R. ch. 7041.1200.

_____

_____

- [x] A detailed description of how agronomic rate requirements were met is on page 3 of this Annual Report. City
- [x] The farmer was notified of the applicable site restrictions for harvesting crops, grazing and public access. City

APPENDIX G

6/18/13

SLC - PROPOSED NORTH SPRAY SITE
PRELIMINARY LOADING CALCULATIONS

HYDRAULIC LOADING

- Currently the Landfill is applying 4,000,000 - 6,000,000 gallons of leachate to the South Spray Site (22.5 acres).

- Assume an hydraulic loading of 6,000,000 for the proposed North Spray Site (38 acres) for purposes of preliminary loading calculations.

NITROGEN LOADING

- Current limits = 55#/acre for no cuttings
  110#/acre for one cutting
  165#/acre for two cuttings

Historically get 2 cuttings so assume limit of 165 #/acre for North Spray Site.

- Utilize total nitrogen samples collected from pans during actual application per Mike Appelwick's 2012 sampling. These concentrations more representative of actual nitrogen applied. Presumed some reduction from ponds to spray sites.

- Avg. conc. of nitrogen in 2012 = 80 mg/L

$$6{,}000{,}000 \text{ gallons} \times \frac{3.785 \text{ liters}}{\text{gallon}} \times \frac{80 \text{ mg}}{\text{liter}} \times \frac{2.204 \times 10^{-6} \text{ lb}}{\text{mg}} = 4{,}004 \text{ lbs}$$

105 lbs/acre/yr (38 acre site)

Boron

- Assume 6,000,000 gallon loading rate
- Average concentration of boron since 2009
  13.9 mg/l

$$6{,}000{,}000 \text{ gallons} \times \frac{3.785 \text{ liters}}{\text{gallon}} \times \frac{13.9 \text{ mg}}{\text{liter}} \times \frac{2.204 \times 10^{-6} \text{ lb}}{\text{mg}}$$

= 696 total lbs per year

= 696/38 = 18.3 lb/acre/yr over North Spray Site

= 696/60.5 = 11.5 lb/acre/yr over North and South Spray Sites

Chloride

- Assume 6,000,000 gallon loading rate
- Average concentration of chloride since 2010 = 868 mg/l

$$6{,}000{,}000 \text{ gallons} \times \frac{3.785 \text{ liters}}{\text{gallon}} \times \frac{868 \text{ mg}}{\text{liter}} \times \frac{2.204 \times 10^{-6} \text{ lb}}{\text{mg}}$$

= 43,446 lb per year

= 43,446 lb/yr ÷ 38 1,143 lb/acre/yr NSS

= 43,446 lb/yr ÷ 60.5 718 lb/acre/yr both sites

Metals

- Assume 6,000,000 gallon hyd. loading rate
- Average conc. of Cd since 2009 = 0.94 ug/l = 0.00094 mg/l

$$6{,}000{,}000 \text{ gallons} \times \frac{3.785 \text{ liters}}{\text{gallon}} \times \frac{0.00094 \text{ mg}}{\text{liter}} \times \frac{2.204 \times 10^{-6} \text{ lb}}{\text{mg}}$$

= 0.047 total lbs/year

= 0.047/38 = 0.001 lbs/ac/yr

(35 lbs − 0.678)/0.001 = 34,322 years

AIR QUALITY ANALYSIS

Constituent	Typ. Conc. (ug/L)	Calculated Emission Rate (Kg/yr)	Allowable Emission Rate (Kg/yr)
Benzene	37	0.84	10.7
Chloroform	5.4	0.12	3.8
Dichlorodifluoromethane	54.2	1.23	1,791.4
1,1-DCA	76.8	1.74	4,478.4
1,2-DCA	9.8	0.22	3.4
1,1-DCE	14.2	0.32	1.8
1,2-DCE	81.7	1.86	7,832
Dichlorofluoromethane	102.00	2.32	414.8
Ethylbenzene	73.5	1.67	941.9
Methylene Chloride	840	19.1	188.1
1,1,2,2-PCA	21.7	0.50	1.5
PCE	16.8	0.38	152.3
1,1,1-TCA	97.2	2.21	8,956.8
1,1,2-TCA	BDL	—	5.6
TCE	3.6	0.08	52.8
Trichlorofluoromethane	32.4	0.74	6,269.7
Toluene	272	6.18	813.5
Vinyl Chloride	106	2.4 (0.36)	1.1
Xylene (mixed)	140	3.18	941.9

Sample Calculation : Vinyl Chloride

$$6{,}000{,}000 \frac{\text{gallons}}{\text{yr.}} \times 106\ \text{ug/L} \times 3.785\ \text{L/gallon} \times \frac{1\ \text{Kg}}{1\times10^{9}\ \text{ug}} = 2.4\ \text{Kg/yr}$$

→ Actual leach levels observed in spray applied leachate = max = 16 ug/L = 0.36 Kg/yr

APPENDIX H

St. Louis County Regional Landfill Leachate Pond Liner Evaluation, 2013

Water level

		Primary Pond			Secondary Pond			Common	
	Date	PLDR-2	PLDR-3	Pond	PLDR-1	PLDR-4	Pond	PLDR-B	PLDR-C
Weekly	1-Jul-13								
	8-Jul-13								
	15-Jul-13								
	22-Jul-13								
	29-Jul-13								
	5-Aug-13								
	12-Aug-13								
	19-Aug-13								
	26-Aug-13								
Monthly	2-Sep-13								
	7-Oct-13								
	4-Nov-13								
	2-Dec-13								

PLDR water level measured with an electronic water level tape, in feet, from the top of surveyed riser
Pond water levels measured from installed, surveyed staff gauge, in feet.

Volume Removed

Primary Pond	Secondary Pond
PLDR-2	PLDR-1

Volume in gallons

TAB G

Closure, Post-Closure, Contingency Action Plan and Financial Assurance St. Louis County Regional Landfill

Prepared by:

ST. LOUIS COUNTY ENVIRONMENTAL SERVICES DEPARTMENT
Northland Office Center, Suite 115
307 1st Street South
Virginia, Minnesota 55792

NORTHEAST TECHNICAL SERVICES, INC.
526 Chestnut Street
P.O. Box 1142
Virginia, Minnesota 55792

and

LIESCH ASSOCIATES, INC.
350 St. Peter Street
St. Paul, Minnesota 55102

July 2013

TABLE of CONTENTS

Page

Section I Introduction 1

Section II Closure Plan 2
- A. GENERAL 2
- B. NOTIFICATION OF PHASE CLOSURE 2
- C. NOTIFICATION OF FINAL CLOSURE 2
- D. CLOSURE SCHEDULE 2
- E. CLOSURE PROCEDURES 3
- F. CERTIFICATION OF FINAL PHASE CLOSURE 3
- G. DEED NOTATION 3
- H. CLOSURE COST ESTIMATE 4
- I. AMENDMENT OF CLOSURE PLAN 4

Section III Post-Closure Plan 5
- A. GENERAL 5
- B. INSPECTION AND MAINTENANCE 5
- C. ENVIRONMENTAL MONITORING 5
- D. SURFACE WATER RUN-OFF CONTROL FACILITIES 6
- E. LEACHATE SYSTEM MANAGEMENT 6
  - 1. Leachate Collection System Inspection/Maintenance 6
  - 2. Leachate Forcemain Inspection/Maintenance 6
  - 3. Leachate Pumping System Inspection/Maintenance 6
  - 4. Leachate Treatment System Inspection/Maintenance 6
  - 5. Leachate Monitoring 7
- F. REPORTING 7
- G. ULTIMATE LAND USE 7
- H. POST-CLOSURE CARE COST ESTIMATE 7
- I. AMENDMENT OF POST-CLOSURE PLAN 7

Section IV Contingency Action Plan 8
- A. GENERAL 8
- B. CONTINGENCIES 8
  - 1. Event-Triggered 8
  - 2. Inspection-Triggered 8
  - 3. Monitoring-Triggered 9
- C. CORRECTIVE ACTIONS 9
  - 1. Emergency Actions 9
    - a. General 9
    - b. Severe Rainfall 9
    - c. Leachate Management System Failure 9
    - d. Fire 10

e. Vandalism 10

Table of Contents (Cont.)

Page

2. Follow-up to Emergency Actions 10
3. Events Not Requiring Emergency Action 11
D. Action Levels 12
E. Amendment of Contingency Action Plan 12

Section V Financial Assurance 13

TABLES

1	Closure Plan: Design Volumes
2	Event-Triggered Contingencies
3	Inspection-Triggered Contingencies
4	Monitoring-Triggered Contingencies
5	Closure Cost Estimate:
6	Post-Closure Cost Estimate: Annual Cost Summary
6A	Post-Closure Cost Estimate: Facility Inspection Costs
6B	Post-Closure Cost Estimate: Routine Maintenance and Repair Costs
6C	Post-Closure Cost Estimate: Settlement and Erosion Damage Repair Costs
6D	Post-Closure Cost Estimate: Leachate System Management Costs
6E	Post-Closure Cost Estimate: Water Monitoring Costs
6F	Post-Closure Cost Estimate: Leak Detection System Analysis and Methane Gas Sampling
6G	Post-Closure Cost Estimate: Administrative and Reporting Services Costs
7	Contingency Action Cost Estimate: Summary
7A	Contingency Action Cost Estimate: Groundwater Interception System and Treatment
7B	Contingency Action Cost Estimate: Non-Groundwater Contingencies

Section I

Introduction

This report consists of a Closure Plan, Post-Closure Plan, Contingency Action Plan, and the proposed financial assurance for the existing St. Louis County Regional Landfill and proposed development. This report is intended to fulfill the Minnesota Pollution Control Agency (MPCA) requirements for closure (Minnesota Rules (MR) 7035.2625, 7035.2635, 7035.2815, Sub. 16, and 7035.2825), post-closure (MR 7035.2645, 7035.2655 and 7035.2815, Sub. 16), and contingency action (MR 7035.2615). Updated cost estimates for closure, post-closure, and contingency action are included for financial assurance calculations.

Section II of this document presents the Closure Plan which includes MPCA notification, schedule, procedures, and certification. In addition, the closure costs are presented for purposes of establishing financial assurance.

Section III of this document defines a Post-Closure Plan and evaluates costs associated with post-closure care. It adjusts the costs to future dollars and summarizes a 20-year total to be funded by the financial assurance.

Section IV of this document defines a Contingency Action Plan and evaluates costs associated with each contingency. The financial assurance evaluation includes proportional amounts reflecting the probability of each particular contingency.

Section V of this document defines the financial assurance required for site closure, post-closure care and contingency actions. As of December 31, 2012, St. Louis County's Financial Assurance Fund totaled $3,046,683.

Section II

Closure Plan

A. GENERAL

The facility will consist of ten phases. Phases 1/1A through 5 are currently being filled. Phase 6 was constructed in 2012 and Phases 7 through 9 are proposed for future construction (see Design Report, Appendix E, Plan Drawing No. 3). Closure activities for a significant portion of Phase 1A and part of Phase 1 occurred in 2000. As subsequent phases are brought to final grades, MPCA Solid Waste Management Rules Part 7035.2625 and proposed future landfill gas/recirculation activity will continue to be used as a guide to determine closure requirements for the operating cells and for the proposed developments. Additional detail is provided as Appendix C of the Design Report section of this permit.

Contact after closure is:

St. Louis County Environmental Services Department
Northland Office Center, Suite 115
307 1st Street South
Virginia, Minnesota 55792

A copy of the approved Closure Plan and all revisions to the plan will be kept at the facility until final closure is completed and certified. This Closure Plan supersedes any previous closure plans prepared for this site.

B. NOTIFICATION OF PHASE CLOSURE

The MPCA will be notified of impending phase closure at least 90 days prior to initiation of closure activities.

C. NOTIFICATION OF FINAL CLOSURE

Final closure will begin as soon as practical after receiving the last shipment of waste. Final closure will be preceded by the following:

- The MPCA Commissioner and the public will be notified 90 days before closure activities begin.

D. CLOSURE SCHEDULE

The closure schedule for the different phases is dependent on the waste flows and facility design. Independent phases will be closed once filled to final elevation. Under the current permit, the facility is expected to reach final capacity in approximately the year 2039 if current waste disposal volumes remain constant. Closure of the landfill will be initiated in a phased approach, leaving only the operating phases in an "open" condition. For purposes of financial assurance, the closure costs

for Phases 1A and part of 1 (extrapolated to 10 acres) will be utilized to calculate closure costs, since this will represent the largest area requiring final cover for the remainder of site development.

E. CLOSURE PROCEDURES

Closure of each phase will be initiated upon reaching final grade according to the closure requirement in the permit. Closure will mainly consist of placement of a low permeability cover system over the facility. A summary of the final cover design is as follows:

1. Grade intermediate cover layer (consisting of at least 12 inches).
2. Grade six inch buffer layer.
3. Installation of vertical gas vents.
4. Installation of passive gas vents / leachate re-circulation system.
5. Installation of 40-mil LDPE synthetic barrier layer or equivalent.
6. Placement of twelve inches of granular drainage layer.
7. Placement of twelve inches of vegetation supporting topsoil.
8. Establishment of vegetative cover.

The final cover system provides vertical gas vents, which allow gases generated in the waste to migrate to the surface such that there is not excessive gas pressure buildup within the waste. Proposed final cover grades and construction details are provided in the plan drawings.

The cost estimates included in this document utilize this final cover design (see Table 5). It is anticipated that a drainage collection pipe will be incorporated into the perimeter of the granular drainage layer design. Any changes in the design will be incorporated into a reevaluation of closure costs and the related financial assurance calculations at the time of final cover construction.

All temporary and final cover materials will comply with the requirements of all applicable rules (see Design Report, Appendix C for cell closure construction specifications).

F. CERTIFICATION OF FINAL PHASE CLOSURE

St. Louis County will notify the MPCA when closure is completed and submit, within 30 days of construction completion, a closure certification report for approval by the MPCA. The certification report will be signed by an engineer registered in Minnesota and state that the closure has been completed in accordance with the approved plans and specifications.

Testing of the various components of the cover will be conducted and documented in accordance with the Construction Quality Assurance/Quality Control Plan in effect at the time of final closure, and in accordance with all applicable rules. The closure and construction documentation will be submitted to the MPCA no later than 30 days following completion of final closure. The documentation will contain record drawings, testing data, description of the construction process and photographs of the major aspects of the construction phase.

In addition, upon final closure of the facility, a detailed description, including a plat, will be recorded with the St. Louis County Recorder. The description will include general types and location of wastes, depth of fill, and other information of interest to future land owners, although it is St. Louis County's expectation that the Regional Landfill will permanently remain in County ownership. A copy of record drawings will be submitted to the St. Louis County Recorder and the MPCA.

G. DEED NOTATION

A notation will be made on the deed to the property. The notation will, in perpetuity, notify any potential purchasers of the property of any special conditions or limitations for use of the site. The notation will include record drawings for the facility. A copy of the notation carrying the St. Louis County Recorder's seal will be included with the final closure certification.

H. CLOSURE COST ESTIMATE

Table 5 presents a summary of the estimated closure costs. Approximately 10 acres, the area of Phases 1 and part of 1A, were used for cost estimating purposes and would be the largest area to be closed for the remainder of the site's operating life.

I. AMENDMENT OF CLOSURE PLAN

Whenever any change or event affects the Closure Plan, a modified Closure Plan will be prepared and submitted to the MPCA for approval within the Annual Report and the modifications will be incorporated into the next permit re-issuance application. This applies to any change in the Operations and Maintenance Plan or facility design affecting closure procedures, or whenever the expected year of closure changes. In the case of this facility, the Closure Plan will be updated, at a minimum, at the time of repermitting (every five years) to incorporate any changes in operations, design or scheduling of closure.

A. GENERAL

The owner of the facility will be responsible for the post-closure care of the site. MPCA Solid Waste Management Rules, Parts 7035.2645 and 7035.2655 are used as a guide to determine post-closure requirements. The post-closure period begins on the date of MPCA approval of final closure certification, and continues for a period of at least 20 years from that date. A summary of the post-closure care program is provided in the following text.

B. INSPECTION AND MAINTENANCE

An inspection of the landfill will be conducted quarterly for the first three years following closure. Thereafter, St. Louis County will propose a reduction in the number of annual inspections for the post-closure period. The goal of these inspections is to identify existing and potential problems at the site and to initiate corrective actions, if necessary. Records from each inspection will be kept at least five years after the date of inspection. The conditions of the cover system, monitoring system, survey monument, and the condition of the vegetation at the site are of particular importance. The site will be mowed once per year.

Necessary repairs will be done within 30 days of discovery, if the inspection reveals any problem at the site. It is anticipated that some grading and reseeding may be required during the five- to ten-year period following closure.

C. ENVIRONMENTAL MONITORING

Quarterly groundwater and surface water monitoring will be conducted throughout the post-closure period in accordance with the Environmental Monitoring System (EMS) Plan (see Section II.B of the Design Report in this permit re-application). The continued suitability of the EMS for monitoring of existing site conditions will be reviewed annually and discussed in the annual reports submitted throughout the post-closure period. If changed conditions or results indicate the EMS should be changed, the program may be modified upon request of St. Louis County, and upon approval of the MPCA.

Water samples collected from the monitoring wells and surface water sampling locations will be analyzed for the parameters listed in the "Environmental Monitoring System" Section of this report. The results of each round of analyses will be evaluated and summarized in the St. Louis County Regional Landfill Monitoring Report, submitted annually to the MPCA.

Groundwater and surface water samples will be collected by a qualified company with knowledge and experience in water sampling techniques.

Sample analysis will be conducted by a qualified laboratory, which has a quality assurance/quality control plan on file with the MPCA. Data will be reviewed to chart surface water and groundwater conditions. Collection and analysis are presently being performed by Northeast Technical Services.

Landfill gas monitoring will continue throughout the post-closure period. The landfill gas monitoring program will consist of visual inspections, and if required, field screening and laboratory sample collection and analysis.

D. SURFACE WATER RUN-OFF CONTROL FACILITIES

The drainage ditches will be inspected at least quarterly and after major storm events to determine any needed maintenance. Maintenance will be performed as needed within twenty working days of the inspection date.

E. LEACHATE SYSTEM MANAGEMENT

1. Leachate Collection System Inspection/Maintenance

The entire leachate collection system will be inspected semi-annually by observing the flow in each manhole and by monitoring flow rates through the PLC system. The leachate collection system will be cleaned annually.

2. Leachate Forcemain Inspection/Maintenance

Air release valves and manholes shall be inspected quarterly. During each inspection, valves shall be operated and serviced.

3. Leachate Pumping System Inspection/Maintenance

The operation controls and pumps should be inspected weekly. Inspection should include operating the control panel and wet well hatch to observe warning lights within panel for over-temperature of the pump motor and seal failure. Run each pump on manual operation for sufficient time to verify acceptable pump operation. Verify that the float switches and cables are hanging freely. Records the running time meter readings and verify that each pump has run for approximately equal time. Verify that the condensate heater is operational by absence of moisture within the panel and/or warmth radiating from the heater. Confirm that the hand-off-automatic switch is in the automatic position after inspection.

Solids shall be removed when needed.

4. Leachate Treatment System Inspection/Maintenance

Aeration Equipment Maintenance - Inspect equipment operation weekly. Inspect inlet filters monthly and replace as necessary. Inspect belts monthly.

Aeration Pond Maintenance - Inspect berm for erosion in spring and fall. Remove brush or tree growth. Inspect ponds near water surface for aquatic vegetation. Inspect pond leak detection manholes on a weekly basis.

Irrigation System - Drain irrigation forcemain, irrigation equipment, and valves prior to freezing weather in the fall. Irrigation site management shall be as outlined in the "Operation Procedures Manual" in this report.

5. Leachate Monitoring

Leachate will be sampled and analyzed quarterly in conjunction with the groundwater sampling schedule. Leachate will be sampled and analyzed for the parameters detailed in the Environmental Monitoring Plan Section of this permit re-application.

In addition, leachate head monitoring and leak detection monitoring for the lysimeters will be performed on a quarterly basis in conjunction with the leachate monitoring events.

F. REPORTING

A report describing the inspection, conditions observed, corrective actions, maintenance activities, and monitoring activities and results will be prepared and submitted to the MPCA annually on or before February 1. The contact for the facility during the post-closure period will be:

St. Louis County Environmental Services Department
Northland Office Center, Suite 115
307 1st Street South
Virginia, Minnesota 55792
(218) 749-0639

G. ULTIMATE LAND USE

The facility will be left as open space with no construction occurring on the site unless approved by the MPCA.

H. POST-CLOSURE CARE COST ESTIMATE

Table 6 provides a summary of annual post-closure care costs, which are detailed in Tables 6A through 6G. The long-term care cost projection for 20 years, based on the annual post-closure costs, will be used for financial assurance calculations. The year 2040 is used as the starting point for the estimate, which reflects the expected date of facility closure.

I. AMENDMENT OF POST-CLOSURE PLAN

Whenever any change or event affects the Post-Closure Plan, a modified Post-Closure Plan will be prepared and submitted to the MPCA for approval within the Annual Report and the modifications will be incorporated into the next permit re-issuance application. This applies to, but is not limited to, any change in the monitoring system or procedures.

A. GENERAL

This Contingency Action Plan has been prepared for the St. Louis County Regional Landfill in accordance with Part 7035.2615 of the MPCA Solid Waste Rules. This plan is similar to the plan submitted as part of the 1996 permit application due to the fact that potential contingency events discussed in 1996 are still applicable today. The purpose of this plan is to:

- Identify occurrences at the facility, such as natural disasters, vandalism, accidents or failures of constructed design features, that could lead to release of ash or leachate and endanger human health and the environment.
- Establish the sequence and timing of response actions that would minimize hazards to human health and the environment.
- Identify any possible prior arrangements to be made with contractors in order to assure timely and effective response action.
- Estimate the costs associated with these response actions.

A copy of this plan will be kept at the Landfill site for reference by operators and regulatory personnel. Each contingency set forth in this plan has a number of possible solutions and no contingency action plan can address all circumstances encountered.

Therefore, the MPCA will be promptly notified of all incidents, proposed actions, and response status.

B. CONTINGENCIES

Certain events at the facility could lead to an uncontrolled release of waste or leachate into the environment. These could be the result of natural disasters, accidents, vandalism, or failure of constructed features. The contingencies identified in this plan have been divided into three categories:

1. Event-Triggered

Event-triggered contingencies may include severe rainfall, uncontrolled leachate release, fire or other unanticipated events. Table 2 lists some possible events and strategies to deal with them.

2. Inspection-Triggered

Inspection-triggered contingencies may include signs of distress in the landfill cover, erosion, leachate detected in the leak detection system, surface drainage problems, or other findings observed during routine inspections. These are included in Table 3.

3. Monitoring-Triggered

Identified monitoring-triggered contingencies include contamination above action levels of groundwater (e.g., the HRLs) or other findings observed during routine facility monitoring. These are listed in Table 4.

C. CORRECTIVE ACTIONS

1. Emergency Actions

Many of the event-triggered contingencies, such as natural disasters, vandalism, fire, embankment failure, or an uncontrolled release of leachate, require an emergency response. Such responses are required to be implemented immediately, and may involve resources not available during normal facility operation. These include fire and police, as well as additional equipment and personnel. The following paragraphs describe the general emergency actions which Table 2 summarizes.

a. General

In the event of emergencies at the site during operations or the post-closure maintenance period, St. Louis County administrative personnel must be contacted. The St. Louis County contact will be :

Environmental Services Department Director
Northland Office Center, Suite 115
307 1st Street South
Virginia, Minnesota 55792

b. Severe Rainfall

As soon as weather permits, the site will be inspected to determine the extent of any damage to the vegetation, berms, cover, surface water controls, or monitoring systems. An example of mitigating an erosion problem is the placement of temporary erosion controls, such as hay bales, soil fill, or mulch, to minimize further damage. Also, sand bags or riprap could be placed to stabilize facility features or temporary piping could be installed to allow run-off controls to function. Excess sediment may require removal from berms, swales, and outlets.

c. Leachate Management System Failure

- Leachate Collection System Failure

It is possible that the leachate collection system could fail due to obstruction, collapse, or breakage of the collection pipe. This could result in a violation of the Intervention Limits at the compliance boundary.

Procedure

1) Failure of system identified from obvious changes in flow at pump station and in water levels at system cleanouts.
2) Locate source of failure by observing flow in system manholes.
3) If pipe is blocked with material, clean out with high pressure jet.
4) If pipe is crushed or broken, excavate and remove damaged section.
5) Replace damaged section, cover and reseed.

- Leachate Treatment System Failure

The leachate treatment system has been designed such that the treatment ponds can be operated individually, should it be necessary to remove one pond from service for repairs and maintenance.

The leachate and irrigation pumping stations are designed such that each pumping unit exceeds required capacity. Repair or maintenance to pumping units will be made as soon as a failure or malfunction is identified.

d. Fire

Temperatures are taken on any loads suspected of being "hot". Any load exceeding 140 degrees F. are refused acceptance into the landfill. Fire originating from accidental ignitions from equipment used in development operations, operations in the fill area, or arson are the most likely causes of landfill fire. A fire in the refuse or leachate treatment blower building would pose a danger to those fighting the blaze. A grass fire adjacent to the proposed site would be a hazard to fire fighters. Environmental damage would be short-term, and vegetation could recover quickly with favorable weather conditions. Following a fire, precautions may be needed to prevent erosion of the cover until the vegetation is re-established.

If the fire cannot be quickly extinguished, local fire departments from the cities of Virginia, Mt. Iron, and Gilbert will be contacted. Neighboring rural fire departments will also be contacted to provide tankers for water supply support.

e. Vandalism

For acts of vandalism, appropriate temporary repairs should be performed as soon as possible. These issues will also be addressed by St. Louis County personnel. Precautions will be taken at the site to discourage vandalism including a locked gate on the access road.

Within ten working days a written description describing the emergency and corrective action procedures will be submitted to the MPCA.

2. Follow-up to Emergency Actions

A detailed inspection of the affected areas will be performed as soon as possible. A team consisting of members from site operations, and possibly other technical advisors, will assess the degree and extent of damage to the final cover, surface water controls, leachate management system, monitoring systems, access roads, fencing, etc. Any damage will be described in detailed inspection notes and photographed.

Following the inspection, a brief report will be prepared by the operator's technical staff, describing the effects of damage on the intended purposes of the engineering features of the facility, and subsequent repairs. The inspection report and repair schedule will be submitted to the MPCA.

3. Events Not Requiring Emergency Action

Examples of inspection-triggered and monitoring-triggered contingencies that will generally not require an emergency response are small cracks in embankments or the cover, settlement, leachate seeps, minor erosion, reduced performance of the leachate management system, surface drainage problems, or water quality violations. However, these contingencies may require interim response actions, continued or enhanced monitoring, assessment of the extent of the problem, and/or evaluation of the design prior to implementation of repairs or remedial actions. Actions for inspection- and monitoring-triggered contingencies are summarized in Tables 3 and 4, respectively. In addition, water quality concerns are discussed in the following section.

Water Quality

Actions to be followed include:

- If a water quality action level (defined by the Minnesota Rules) is exceeded, the MPCA will be notified in writing.
- All sampling and analytical procedures will be reviewed to verify that proper techniques were used.
- potential implications of the elevated parameters will be determined by examining regional and historical data, background data and seasonal trends, as well as determining if the occurrence is localized.
- Resampling will be performed, if necessary, to verify results.
- If initial results are verified, the potential impact to human health or the environment will be evaluated.
- The determination will be made if immediate action is required or if continued monitoring is sufficient.
- Possible sources will be investigated.

During the time period covered by the above actions, routine water monitoring will continue.

Once the evaluation is completed, and if it is concluded that a problem exists, the extent of the problem must be determined. This may be done by continued monitoring of existing locations or by installing additional monitoring points. The information gathered during this period of investigation will be submitted to the MPCA. These results will be used for a feasibility study to determine any required remedial actions. Remedial actions could consist of:

1) Continued monitoring of groundwater and, if necessary, expansion of the monitoring system;
2) Repairing the identified features causing the problem (for example the cover or leachate management system); or
3) Installation of a groundwater remediation system.

D. ACTION LEVELS

Water quality action levels will be established by comparison to the MDH Health Risk Limits (HRL's), as well as site-specific water quality pertaining to background levels. These action levels are updated periodically by the MPCA and may change throughout the operating life of the facility and the post-closure period. Any changes will be noted in the annual monitoring report.

E. AMENDMENT OF CONTINGENCY ACTION PLAN

A modified Contingency Action Plan will be prepared and submitted to the MPCA when the facility permit is amended; the design, construction, operation, or maintenance of the facility is significantly changed; or when release or failure of design features indicate revised procedures are necessary.

Section V

Financial Assurance

St. Louis County will provide the required financial assurance for site closure, post-closure care and contingency actions. Financial assurance will be provided in accordance with Minnesota Rules, Part 7035.2665 to 7035.2805 or an approved alternative mechanism. As of December 31, 2012, the County's financial assurance fund totaled $3,046,683.

Table 5 provides the closure cost estimate. For the purposes of establishing financial assurance, the proposed closure of Phases 1 and part of 1A, of approximately 10 acres was utilized to calculate closure costs. Because closure at the facility will be initiated in a phased approach, this 10-acre area would be the largest phase of development requiring closure.

Table 6 provides a summary of annual post-closure care costs, which are detailed in Tables 6A through 6F. The annual post-closure care cost is presently $58,913. The post-closure care costs has been adjusted using an inflation rate of 1.72 percent.

Financial assurance for contingency action costs is based on the expected value of the worst case series of events. This amount is adjusted annually and reported in the facility annual report to the MPCA. Cost estimates for contingency action are summarized in Table 7. Detailed estimates for the various contingency events are presented in Tables 7A and 7B.
The financial assurance cost estimates are summarized as follows:

Final Closure			$1,054,997
Post-closure Care Cost (20 years following closure in the year 2040)			$1,584,086
Total Contingency Action Costs	$993,641	Expected Value	$993,641
Total Requirement:			**$3,632,724**

These cost estimates will be utilized to establish a mechanism for providing financial assurance for the facility. Once this plan is approved, the County will adjust their payment accordingly and use a facility site life of twenty-seven (27) years.

Tables

Table 1
St. Louis County Regional Landfill Closure Plan
DESIGN VOLUMES

Phase	Open Date	Total Volume[1] (cy)	Final Cover Volume[2] (cy)	Volume for Waste[3] Daily/Inter-mediate cover (cy)	Remaining Capacity[4] (cy)	Remaining Operating Life[5] (yrs)	Final Cover Area (acre)	Liner Area (acre)
Phase 1	1993	Combined with Phase 1A					6.4	Combined w/Phase 1A
Phase 1A	1996	900,000	45,050	854,950	67,159	16	3.8	15.7
Phase 2	2001	223,150	7,700	215,450	60,209	11	1.6	2.7
Phase 3	2002	289,950	11,300	278,650	105,859	13	2.3	2.9
Phase 4	2004	290,720	9,350	281,370	140,799	14	1.9	2.8
Phase 5	2008	386,650	12,830	373,820	373,820	4.2	2.7	2.9
Phase 6	2012	328,057	21,000	307,057	307,057	2.4	4.3	5.0
Phase 7	2016	371,685	13,500	358,185	358,185	7.2	2.8	3.3
Phase 8	2021	583,840	43,320	540,520	540,520	7.2	9.0	3.3
Phase 9	2025	834,618	34,040	800,578	800,578	5.6	7.1	3.3
TOTAL	**1993**	**4,208,670**	**198,100**	**4,010,580**	**2,754,186**	**31**	**41.9**	**41.9**

1. Based from top of sand drainage layer on composite liner system to top of final cover.
2. Based on 3.0 feet of final cover which includes a 12-inch leveling layer over the intermediate cover to provide a suitable base.
3. Based on total volume minus final cover.
4. Phases 1/1A through 5 based on actual fill in place December 31, 2012.
5. Phase 6 through 9 total waste/daily cover volume based on a fill rate of 90,000 cy of waste and cover per year.

Remaining Operating life is 33 years from January 1, 2013, based on the average annual fill rates from 1993 through 2012.

TABLE 2

Event-Triggered Contingencies

St. Louis County Regional Landfill

Event-Triggered Contingency	Potential Effects	Action
1. Severe Rainfall	Threatened Embankment Stability	Immediately assess damage visually; check for cracking and differential movement; report within ten days, place sand bags, soil fill, or riprap to temporarily stabilize embankment; evaluate condition, design and prepare permanent repair procedures report; implement recommendations.
	Erosion	Assess damage; report; within ten days place temporary erosion controls, such as hay bales, erosion control mats, silt fences, or mulch; make permanent repairs.
	Damaged Surface Water Control	Assess damage; report; within ten days place temporary erosion controls, such as hay bales, erosion control mats, silt fences, or mulch; make permanent repairs.
2. Uncontrolled Leachate Release	Damaged Vegetation	Assess damage; evaluate cause; report; if necessary, within ten days place temporary erosion controls; re-vegetate.
	Surface Water or Groundwater Contamination	Immediately contain and collect retrievable leachate and absorb remaining leachate; report; monitor; evaluate impact; determine and implement appropriate follow-up actions.
	Soil Contamination	Evaluate impact; report; within ten days collect saturated soil for disposal in lined cell; collect soil samples below excavation; determine and implement appropriate follow-up actions.
3. Fire	Damaged Vegetation	If possible, immediately place soil over fire or use water to extinguish fire; contact local fire department if necessary (cites of Virginia, Eveleth, and Gilbert) to extinguish fire; report; clear access roads for equipment access; extinguish fire; place temporary erosion controls; re-vegetate.
4. Vandalism	Damage to Facility Features	Report; within ten days assess impact; based on impact repair damage; assess site security.

TABLE 3

Inspection-Triggered Contingencies

St. Louis County Regional Landfill

Inspection-Triggered Contingency	Potential Effects	Action
1. Inadequate Performance of Leachate Management System	Groundwater or Surface Water Contamination	Report; evaluate cause of inadequate performance; based on evaluation, implement remedial measures within one month, remedial measures could include upgrading or repair of leachate pumping and treatment system.
2. Erosion or Degradation of Final Cover	Increased Leachate Generation, Surface Water Contamination	Report; immediately assess damage; within two weeks place temporary erosion controls; evaluate cause and design; make permanent repairs.
3. Obstructed Surface Water Controls	Erosion	Report; within five days place temporary erosion controls; remove cause of clogs; assess damage; repair erosion; evaluate design and make any needed changes; clean ditches and sedimentation pond, as needed.
4. Leachate Detected in Leachate Leak Detection System	Increased Groundwater Contamination	Verify by sampling and analysis that the liquid is leachate; if it is, report; within five days extract the liquid and discharge into leachate storage system; monitor; evaluate quantity and rate of leakage; evaluate potential impacts on groundwater, if necessary, evaluate cause and determine potential remedial actions; implement remedial action.

TABLE 4

Monitoring-Triggered Contingencies

St. Louis County Regional Landfill

Monitoring-Triggered Contingency	Potential Effects	Action
1. Exceedance of groundwater standard	Groundwater contamination	Report; verification monitoring; within two weeks evaluate impact; complete feasibility study and determine remedial action; implement remedial action.
2. Exceedance of gas standard	Migration of landfill gas off-site	Report; verification monitoring; within two weeks evaluate impact; complete feasibility study and determine remedial action; implement remedial action, if necessary.
3. Head exceedance over liner system	If defects in liner system, potential leakage increase and potential groundwater contamination	Report; begin pumping of excess leachate as soon as possible until head over liner has been reduced.

Table 5
2023
Final Closure Cost Estimate - Phase 1/1A (10 Acres)
St. Louis County Regional Landfill

ITEM	UNIT	UNIT PRICE	QUANTITY	PRICE
Closure Mobilization	L.S.	$97,355	1	$97,355
Rough Grading	Acre	$2,681	14.2	$38,070
Soil Buffer Layer - 6 inches	C.Y.	$13.60	8,160	$110,976
40-mil LLDPE Geomembrane	S.F.	$0.54	526,425	$284,270
Granular Drainage Layer	C.Y.	$17.00	12,250	$208,250
General Fill Layer - 9 in.	C.Y.	$13.59	12,250	$166,478
Topsoil Layer	C.Y.	$24.10	8,175	$197,018
Turf Establishment	Acre	$1,360	15.8	$21,488
Vertical Gas Vent Wells	L.F.	$243.24	410	$99,728
Passive Gas Vent - Leachate Recirculation System	L.S.	$98,474	1	$98,474
Drainage Control System	L.S.	$62,665	1	$62,665
Revet Mattresses	S.Y.	$16.95	1175	$19,916
Drainage Berms	L.F.	$31.17	3,080	$96,004
Miscellaneous Work	L.S.	$9,400	1	$9,400
Contingency (10%)	L.S.	$150,932	1	$150,932
Engineering Design & Closure	L.S.	$145,473	1	$145,473
Closure Lab & Survey	Laboratory testing - 1	$22,380	1	
	Land surveyor	$17,904	1	
				$40,284
Total Estimate Cost of Final Closure				**$1,846,781**

TABLE 6

Post-closure Cost Estimate: Annual Cost Summary

St. Louis County Regional Landfill

Item	Description	Estimated Annual Cost
1.	Facility Inspection Costs	$2,000
2.	Routine Maintenance and Repair Costs	$23,000
3.	Settlement and Erosion Damage Repair Costs	$7,500
4.	Leachate System Management Costs	$54,500
5.	Water Monitoring Costs	$37,750
6.	Leak Detection System and Methane Gas Sampling	$6,500
7.	Administrative and Reporting Services Costs	$3,700
TOTAL Estimated Annual Post-closure Costs		$134,950

TABLE 6A

Post-closure Cost Estimate: Facility Inspection Costs

St. Louis County Regional Landfill

Item	Description	Quantity	Unit	Unit Cost	Extension[1]
1.	Facility Inspection	32	HR	$62.50	$2,000
TOTAL Annual Cost of Facility Inspection					$2,000

Comments:

(1) Four inspections per year will take place during the first three years of the post-closure period. Thereafter, St. Louis County will propose a reduction in the number of inspections for the post-closure period.

TABLE 6B

Post-closure Cost Estimate: Routine Maintenance and Repair Costs

St. Louis County Regional Landfill

Item	Description	Quantity	Unit	Unit Cost	Extension[1]	Subtotal
1.	Mowing (assume 1x/yr)[2]	10	HR	$154.00	1,540	$1,540
2.	Fertilizing (assume 1x/yr)	30	AC	309.50	9,285	$9,285
3.	Cover revegetation (assume 2x/yr)[3]	1	AC	4,950.00	4,950	$4,950
4.	Security System					
	a. Fence[4]	100	LF	15.50	1550	
	b. Other Items	1	LS	308.00	308	
	Subtotal					$1,858
5.	Perimeter Ditch Cleaning (assume 1x/yr)	3,000	LF	0.85	2550	$2,550
6.	Perimeter Ditch Repair (assume 1x/yr)					
	a. Soil[5]	50	CY	12.30	615	
	b. Revegetation	0.1	AC	6,160.00	615	
	Subtotal					$1,230
7.	Access Road Maintenance	1	LS	1587.00	1587	$1,587
TOTAL Annual Cost for Routine Maintenance and Repairs						$23,000

Comments:

(1) Extensions are rounded to the nearest $10.
(2) Mowing: approximately 10 acres at 1 hour/acre, once per year (total of 30 acres to be mowed every 3 years).
(3) Cover revegetation: 0.5 acres per event, twice per year.
(4) Fencing includes gates and posts.
(5) Assumed not available on site.

TABLE 6C

Post-closure Cost Estimate: Settlement and Erosion Damage Repair Costs

St. Louis County Regional Landfill

Item	Description	Quantity	Unit	Unit Cost	Extension[1]
1.	Soil Replacement[2][3] (0.5 acres affected per yr)	800	CY	$6.20	$4,960
2.	Revegetation	0.5	AC	5,080.00	$2,540
TOTAL Annual Cost for Settlement and Erosion Damage Repair					$7,500

Comments:

(1) Extensions are rounded to nearest $10.
(2) This includes berm washouts.
(3) Assumed available on site.

TABLE 6D

Post-closure Cost Estimate: Leachate System Management Costs

St. Louis County Regional Landfill

Item	Description	Quantity	Unit	Unit Cost	Extension[1]	Subtotal
1.	Leachate System O&M	1	Lump Sum	--	$49,500	$49,500
2.	Monitoring a. Quarterly leachate analysis and reporting Subtotal	4	Per Event	$1,250	$5,000	$5,000
	TOTAL Annual Cost for Leachate System Management					$54,500

Comments:

(1) Extensions are rounded to nearest $10.

TABLE 6E

Post-closure Cost Estimate: Water Monitoring Costs

St. Louis County Regional Landfill

Item	Description	Quantity	Unit	Unit Cost	Extension[1]	Subtotal
1.	Sampling Per Event	4	EA	$3,500[2]	$14,000	$14,000
2.	Laboratory Analysis (14 monitoring wells and 3 surface water points)	--	--	--	--	$22,200
3.	Monitoring Well Replacement	0.25[5]	EA	$6,200	$1,550	$1,550
	TOTAL Annual Cost for Water Monitoring					$37,750

Comments:

(1) Extensions are rounded to nearest $10.
(2) Includes project management, two days field time, equipment, travel and miscellaneous expenses.
(3) Assumes one 25-foot monitoring well must be replaced every four years.
(4) Maintenance of the monitoring wells is assumed to take place during each sampling event; therefore, no extra cost is needed.

TABLE 6F

Post-closure Cost Estimate:
Leak Detection System Analysis and Methane Gas Sampling

St. Louis County Regional Landfill

Item	Description	Quantity	Unit	Unit Cost	Extension[1]	Subtotal
1.	Sampling and Analysis	EA	8	$812.50	$6,500	$6,500
TOTAL Annual Cost for Leak Detection System and Methane Gas Sampling						$6,500

Comments:

(1) Extensions are rounded to nearest $10.

TABLE 6G

Post-closure Cost Estimate: Administrative and Reporting Services Costs

St. Louis County Regional Landfill

Item	Description	Quantity	Unit	Unit Cost	Extension[1]	Subtotal
1.	Annual Report	1	L.S.	--	$3,700	$3,700
TOTAL Annual Cost for Administrative and Reporting Services						$3,700

Comments:

(1) Extensions are rounded to nearest $10.

TABLE 7

Contingency Action Cost Estimate: Summary

St. Louis County Regional Landfill

Item	Description	Subtotals
1.	Groundwater Interception System and Treatment	$551,600
2.	Severe Erosion Repair	$21,890
3.	Major Cover Damage Repair	$1,900
4.	Fire and Revegetation	$17,600
5.	Leachate Collection System Repair	$350,000
6.	Liner Repair	$280,940
TOTAL Estimated Cost of Contingency Actions		$1,223,930

TABLE 7A

Contingency Action Cost Estimate: Groundwater Interception System and Treatment

St. Louis County Regional Landfill

Item	Description	Quantity	Unit	Unit Cost	Extension	Subtotals	Comments
1.	Mobilization/Demobilization	1	LS	$20,000	$20,000	$20,000	(1)
2.	Interceptor Trench - 560 ft. x 25 ft.	14,000	SF	12.00	168,000	$168,000	(2)
3.	Piping and Pump-out System in Interceptor Trench	1	LS	14,000	14,000	$14,000	(4)
4.	Pumping Cost (Approximately 1 gpm for 20 yrs)	20	LS/YR	200.00	4,000	$4,000	(3)
5.	Pump and Pump Replacement every 5 years	4	EA	2,000	8,000	$8,000	(4)
6.	Treatment or Disposal Costs	10,500	1,000 gal	6.25	65,600	$65,600	
7.	Slurry Wall - 560 ft x 25 ft	14,000	SF	12.00	168,000	$168,000	(2)
8.	Engineering Design	1	LS	34,000	34,000	$34,000	(5)
9.	Documentation and Report a. Professional engineer b. Technician c. Report preparation Subtotal	 40 200 1	 HR HR LS	 71.00 46.00 7,500	 2,800 9,200 7,500	 $20,000	
Subtotal (1-10)						$501,600	
10.	Contingency (10%)					$50,000	
	TOTAL					$551,600	

Comments:

(1) 5% of Direct Construction Cost (Approximate).
(2) Trench assumed two feet thick.
(3) Assumes power available at the site. Power consumption low enough, a minimum charge is assumed.
(4) Based on MPCA suggested costs.
(5) Design fees assumed at 8% of Total Construction Cost (Approximate).

TABLE 7B

Contingency Action Cost Estimate: Non-Groundwater Contingencies

St. Louis County Regional Landfill

Item	Description		Quantity	Unit	Unit Cost	Extension	Subtotals
1.	Severe Erosion/Settlement Repair[1] (1.0 acre, 2 feet deep)						
	a.	Cover Fill	3,230	CY	$3.00	$9,690.00	
	b.	Topsoil	1,600	CY	$6.60	$10,600.00	
	c.	Revegetation	1.0	AC	$1,600.00	$1,600.00	
	Subtotal						$21,890.00
2.	Major Cover Damage Repair (100 SY of cover)						
	a.	Cover Fill	50	CY	$4.00	$200.00	
	b.	Topsoil	15	CY	$7.00	$100.00	
	c.	Revegetation	1	LS	$500.00	$500.00	
	d.	Drainage Layer	30	CY	$9.00	$300.00	
	e.	Geomembrane Repair	100	SY	$6.00	$600.00	
	f.	Contingency (10%)	1	LS	$200.00	$200.00	
	Subtotal						$1,900.00
3.	Fire and Revegetation						
	a.	Fire Fighting	4	HR	$400.00	$1,600.00	
	b.	Revegetation	10	AC	$1,600.00	$16,000.00	
	Subtotal						$17,600.00
4.	Leachate Collection System Repair						
	a.	Excavate and Replace Waste	50,000	CY	$5.00	$250,000.00	
	b.	Replace Collapsed Pipe	200	LF	$20.00	$4,000.00	
	c.	Replace Cap	1.2	AC	$80,000.00	$96,000.00	
	Subtotal						$350,000.00
6.	Liner Repair						
	a.	Waste Excavated	50,000	CY	$5.00	$250,000.00	
	b.	Clay Recompaction	350	CY	$4.00	$1,400.00	
	c.	Liner Repair	480	SY	$5.40	$2,600.00	
	d.	Drainage Layer Repair	160	CY	$9.00	$1,440.00	
	e.	Contingency (10%)				$25,500.00	
	Subtotal						$280,940.00

[1] Assumes 0.5 acres for erosion and 0.5 acres for settlement.